Consolidate Sheet

1.3.2. Name and Average percentage of courses that include experiential learning through project work/field work/internship during last five years

S No	Academic Year	Total No. of Courses	Courses includes Project work	%ge of Courses
1	2020-21	494	396	80.16%
2	2019-20	442	365	82.57%
3	2018-19	435	353	81.14%
4	2017-18	435	357	82.06%
5	2016-17	431	347	80.51%

Principal
Principal
Ramachandra College of
Engineering, Vatluru (V), ELURU

Consolidate Sheet

1.3.2.Name and Average percentage of courses that include experiential learning through project work/field work/internship during last five years

Department : CIVIL Engineering

SL. NO	Academic	Number of Subjects included from total number of Subjects.	% of Courses
1	2020-21	24/30	82%
2	2019-20	24/30	82%
3	2018-19	24/30	82%
4	2017-18	24/30	82%
5	2016-17		
Average Numbers of Courses			**82.%**

Principal

PRINCIPAL
Ramachandra College of Engineering
Vatluru (V), Eluru, W. G. Dt.,

1.3.2. Name and Average percentage of courses that include experiential learning through project work/field work/internship during last five years

Department : CIVIL Engineering **Academic Year:2020-21**

S.no	Name of Regulations	Name of Subjects Referred from total number of Subjects.
1	R16	GEO-TECHNICAL ENGG-I
2	R16	STRENGTH OF MATERIALS
3	R16	CONCRETE TECHNOLOGY
4	R16	TRANSPORTATION ENGG-I
5	R16	TRANSPORTATION ENGG-II
6	R16	SOIL MECHANICS
7	R16	GEO-TECHNICAL ENGG-II
8	R16	SURVEYING
9	R16	BUILDING PLANNING &DRAWING
10	R16	CONCRETE TECHNOLOGY
11	R16	ESTIMATION & SPECIFICATION
12	R16	CONSTRUCTION TECHONOLOGY &MGMT
13	R16	PRESTRESSED CONCRETE
14	R16	WATER RESOURCE ENGG-I
15	R16	WATER RESOURCE ENGG-II
16	R16	ENGINEERING MECHANICS
17	R16	ENGINEERING DRAWING
18	R16	HIGHWAY ENGINEERING
19	R16	ENVIRONMENTAL ENGG-I
20	R16	ENVIRONMENTAL ENGG-II
21	R16	SOLIDWASTE MANAGEMENT
22	R16	WASTE WATER MANAGEMENT
23	R16	EINVIRONMENTAL IMPACT & ASSESMENT
24	R16	ENGINEERING GEOLOGY

HOD

Principal

PRINCIPAL
Ramachandra College of Engineering
Vatluru (V), Eluru, W. G. Dt.,

1.3.2. Name and Average percentage of courses that include experiential learning through project work/field work/internship during last five years

Department : CIVIL Engineering

Academic Year:2019-20

S.no	Name of Regulations	Name of Subjects Referred from total number of Subjects.
1	R16	GEO-TECHNICAL ENGG-I
2	R16	STRENGTH OF MATERIALS
3	R16	CONCRETE TECHNOLOGY
4	R16	TRANSPORTATION ENGG-I
5	R16	TRANSPORTATION ENGG-II
6	R16	SOIL MECHANICS
7	R16	GEO-TECHNICAL ENGG-II
8	R16	SURVEYING
9	R16	BUILDING PLANNING &DRAWING
10	R16	CONCRETE TECHNOLOGY
11	R16	ESTIMATION & SPECIFICATION
12	R16	CONSTRUCTION TECHONOLOGY &MGMT
13	R16	PRESTRESSED CONCRETE
14	R16	WATER RESOURCE ENGG-I
15	R16	WATER RESOURCE ENGG-II
16	R16	ENGINEERING MECHANICS
17	R16	ENGINEERING DRAWING
18	R16	HIGHWAY ENGINEERING
19	R16	ENVIRONMENTAL ENGG-I
20	R16	ENVIRONMENTAL ENGG-II
21	R16	SOLIDWASTE MANAGEMENT
22	R16	WASTE WATER MANAGEMENT
23	R16	EINVIRONMENTAL IMPACT & ASSESMENT
24	R16	ENGINEERING GEOLOGY

HOD

Principal

PRINCIPAL
Ramachandra College of Engineering
Vatluru (V), Eluru, W. G. Dt.,

1.3.2. Name and Average percentage of courses that include experiential learning through project work/field work/internship during last five years

Department : CIVIL Engineering

Academic Year:2018-19

S.no	Name of Regulations	Name of Subjects Referred from total number of Subjects.
1	R13	BUILDING PLANNING &DRAWING
2	R13	CONCRETE TECHNOLOGY
3	R13	ESTIMATION & SPECIFICATION
4	R13	CONSTRUCTION TECHONOLOGY &MGMT
5	R13	PRESTRESSED CONCRETE
6	R13	WATER RESOURCE ENGG-I
7	R13	WATER RESOURCE ENGG-II
8	R13	ENGINEERING MECHANICS
9	R13	ENGINEERING DRAWING
10	R13	HIGHWAY ENGINEERING
11	R13	ENVIRONMENTAL ENGG-I
12	R13	ENVIRONMENTAL ENGG-II
13	R13	SOLIDWASTE MANAGEMENT
14	R13	WASTE WATER MANAGEMENT
15	R13	EINVIRONMENTAL IMPACT & ASSESMENT
16	R13	GEO-TECHNICAL ENGG-II
17	R13	SURVEYING
18	R13	BUILDING PLANNING &DRAWING
19	R13	CONCRETE TECHNOLOGY
20	R13	ESTIMATION & SPECIFICATION
21	R13	CONSTRUCTION TECHONOLOGY &MGMT
22	R13	PRESTRESSED CONCRETE
23	R13	GEO-TECHNICAL ENGG-I

HOD

Principal

PRINCIPAL
Ramachandra College of Engineering
Vatluru (V), Eluru, W. G. Dt.,

1.3.2. Name and Average percentage of courses that include experiential learning through project work/field work/internship during last five years

Department : CIVIL Engineering

Academic Year:2017-18

S.no	Name of Regulations	Name of Subjects Referred from total number of Subjects.
1	R13	GEO-TECHNICAL ENGG-I
2	R13	STRENGTH OF MATERIALS
3	R13	CONCRETE TECHNOLOGY
4	R13	TRANSPORTATION ENGG-I
5	R13	TRANSPORTATION ENGG-II
6	R13	SOIL MECHANICS
7	R13	GEO-TECHNICAL ENGG-II
8	R13	SURVEYING
9	R13	BUILDING PLANNING &DRAWING
10	R13	CONCRETE TECHNOLOGY
11	R13	ESTIMATION & SPECIFICATION
12	R13	CONSTRUCTION TECHONOLOGY &MGMT
13	R13	PRESTRESSED CONCRETE
14	R13	WATER RESOURCE ENGG-I
15	R13	WATER RESOURCE ENGG-II
16	R13	ENGINEERING MECHANICS
17	R13	ENGINEERING DRAWING
18	R13	HIGHWAY ENGINEERING
19	R13	ENVIRONMENTAL ENGG-I
20	R13	ENVIRONMENTAL ENGG-II
21	R13	SOLIDWASTE MANAGEMENT
22	R13	WASTE WATER MANAGEMENT
23	R13	EINVIRONMENTAL IMPACT & ASSESMENT
24	R13	ENGINEERING GEOLOGY

HOD

Principal

PRINCIPAL
Ramachandra College of Engineering
Vatluru (V), Eluru, W. G. Dt.,

Consolidate Sheet

1.3.2. Name and Average percentage of courses that include experiential learning through project work/field work/internship during last five years

SL NO	Academic Year	Number of Subjects included from total number of Subjects.	% of Courses
1	2020-21	25/29	86.2%
2	2019-20	23/29	80%
3	2018-19	25/29	80.64%
4	2017-18	24/29	82.7%
5	2016-17	25/29	86.2%
		Average Numbers of Courses	**82.44%**

Department: Electrical and Electrical Engineering

Principal

PRINCIPAL
Ramachandra College of Engineering
Vatluru (V), Eluru, W. G. Dt.,

Consolidate Sheet (Academic Year Wise)

1.3.2. Name and Average percentage of courses that include experiential learning through project work/field work/internship during last five years

Department: Electrical and Electronics Engineering **Academic Year:2020-21**

SL NO	Regulation	Name of Subjects Referred from total number of Subjects.
1	R16	Electrical Circuit Analysis – I
2	R16	Electrical Circuit Analysis – II
3	R16	Electrical Machines-I
4	R16	Basic Electronics and Devices
5	R16	Electro Magnetic Fields
6	R16	Electrical Measurements
7	R16	Electrical Machines-II
8	R16	Switching Theory and Logic Design
9	R16	Control Systems
10	R16	Power Systems-I
11	R16	Power Systems-II
12	R16	Renewable Energy Sources
13	R16	Signals and Systems
14	R16	Pulse & Digital Circuits
15	R16	Power Electronics
16	R16	Power Electronic Controllers & Drives
17	R16	Power System Analysis
18	R16	Micro Processors and Micro controllers
19	R16	Neural Networks &Fuzzy Logic
20	R16	Utilization of Electrical Energy
21	R16	Linear IC Applications
22	R16	Power System Operation & Control
23	R16	Switchgear and Protection
24	R16	Instrumentation
25	R16	Special Electrical Machines
26	R16	Digital Control Systems
27	R16	HVDC Transmission
28	R16	Flexible Alternating Current Transmission Systems
29	R16	Electrical Distribution Systems

HOD

Principal

PRINCIPAL
Ramachandra College of Engineering
Vatluru (V), Eluru, W. G. Dt.,

Consolidate Sheet (Academic Year Wise)

1.3.2. Name and Average percentage of courses that include experiential learning through project work/field work/internship during last five years

Department: Electrical and Electronics Engineering **Academic Year:2019-20**

SL NO	Regulation	Name of Subjects Referred from total number of Subjects.
1	R16	Electrical Circuit Analysis – I
2	R16	Electrical Circuit Analysis – II
3	R16	Electrical Machines-I
4	R16	Basic Electronics and Devices
5	R16	Electro Magnetic Fields
6	R16	Electrical Measurements
7	R16	Electrical Machines-II
8	R16	Switching Theory and Logic Design
9	R16	Control Systems
10	R16	Power Systems-I
11	R16	Power Systems-II
12	R16	Renewable Energy Sources
13	R16	Signals and Systems
14	R16	Pulse & Digital Circuits
15	R16	Power Electronics
16	R16	Power Electronic Controllers & Drives
17	R16	Power System Analysis
18	R16	Micro Processors and Micro controllers
19	R16	Neural Networks &Fuzzy Logic
20	R16	Utilization of Electrical Energy
21	R16	Linear IC Applications
22	R16	Power System Operation & Control
23	R16	Switchgear and Protection
24	R16	Instrumentation
25	R16	Special Electrical Machines
26	R16	Digital Control Systems
27	R16	HVDC Transmission
28	R16	Flexible Alternating Current Transmission Systems
29	R16	Electrical Distribution Systems

HOD

Principal

PRINCIPAL
Ramachandra College of Engineering
Vatluru (V), Eluru, W. G. Dt.,

Consolidate Sheet (Academic Year Wise)

1.3.2. Name and Average percentage of courses that include experiential learning through project work/field work/internship during last five years

Department: Electrical and Electronics Engineering **Academic Year:2018-19**

SL NO	Regulation	Name of Subjects Referred from total number of Subjects.
1	R16	Electrical Circuit Analysis – I
2	R16	Electrical Circuit Analysis – II
3	R16	Electrical Machines-I
4	R16	Basic Electronics and Devices
5	R16	Electro Magnetic Fields
6	R16	Electrical Measurements
7	R16	Electrical Machines-II
8	R16	Switching Theory and Logic Design
9	R16	Control Systems
10	R16	Power Systems-I
11	R16	Power Systems-II
12	R16	Renewable Energy Sources
13	R16	Signals and Systems
14	R16	Pulse & Digital Circuits
15	R16	Power Electronics
16	R16	Power Electronic Controllers & Drives
17	R16	Power System Analysis
18	R16	Micro Processors and Micro controllers
19	R16	Neural Networks &Fuzzy Logic
20	R16	Utilization of Electrical Energy
21	R16	Linear IC Applications
22	R16	Power System Operation & Control
23	R16	Switchgear and Protection
24	R16	Instrumentation
25	R16	Special Electrical Machines
26	R16	Digital Control Systems
27	R16	HVDC Transmission
28	R16	Flexible Alternating Current Transmission Systems
29	R16	Electrical Distribution Systems

HOD

Principal

PRINCIPAL
Ramachandra College of Engineering
Vatluru (V), Eluru, W. G. Dt.,

Consolidate Sheet (Academic Year Wise)

1.3.2. Name and Average percentage of courses that include experiential learning through project work/field work/internship during last five years

Department: Electrical and Electronics Engineering **Academic Year:2017-18**

SL NO	Regulation	Name of Subjects Referred from total number of Subjects.
1	R16	Electrical Circuit Analysis – I
2	R16	Electrical Circuit Analysis – II
3	R16	Electrical Machines-I
4	R16	Basic Electronics and Devices
5	R16	Electro Magnetic Fields
6	R16	Electrical Measurements
7	R16	Electrical Machines-II
8	R16	Switching Theory and Logic Design
9	R16	Control Systems
10	R16	Power Systems-I
11	R16	Power Systems-II
12	R16	Renewable Energy Sources
13	R16	Signals and Systems
14	R16	Pulse & Digital Circuits
15	R16	Power Electronics
16	R16	Power Electronic Controllers & Drives
17	R16	Power System Analysis
18	R16	Micro Processors and Micro controllers
19	R16	Neural Networks &Fuzzy Logic
20	R16	Utilization of Electrical Energy
21	R16	Linear IC Applications
22	R16	Power System Operation & Control
23	R16	Switchgear and Protection
24	R16	Instrumentation
25	R16	Special Electrical Machines
26	R16	Digital Control Systems
27	R16	HVDC Transmission
28	R16	Flexible Alternating Current Transmission Systems
29	R16	Electrical Distribution Systems

HOD

Principal

PRINCIPAL
Ramachandra College of Engineering
Vatluru (V), Eluru, W. G. Dt.,

Consolidate Sheet (Academic Year Wise)

1.3.2. Name and Average percentage of courses that include experiential learning through project work/field work/internship during last five years

Department: Electrical and Electronics Engineering **Academic Year:2016-17**

SL NO	Regulation	Name of Subjects Refered from total number of Subjects.
1	R13	Electrical Circuit Analysis – I
2	R13	Electrical Circuit Analysis – II
3	R13	Electrical Machines-I
4	R13	Basic Electronics and Devices
5	R13	Electro Magnetic Fields
6	R13	Electrical Measurements
7	R13	Electrical Machines-II
8	R13	Switching Theory and Logic Design
9	R13	Control Systems
10	R13	Power Systems-I
11	R13	Power Systems-II
12	R13	Renewable Energy Sources
13	R13	Signals and Systems
14	R13	Pulse & Digital Circuits
15	R13	Power Electronics
16	R13	Power Electronic Controllers & Drives
17	R13	Power System Analysis
18	R13	Micro Processors and Micro controllers
19	R13	Neural Networks &Fuzzy Logic
20	R13	Utilization of Electrical Energy
21	R13	Linear IC Applications
22	R13	Power System Operation & Control
23	R13	Switchgear and Protection
24	R13	Instrumentation
25	R13	Special Electrical Machines
26	R13	Digital Control Systems
27	R13	HVDC Transmission
28	R13	Flexible Alternating Current Transmission Systems
29	R13	Electrical Distribution Systems

HOD

Principal

PRINCIPAL
Ramachandra College of Engineering
Vatluru (V), Eluru, W. G. Dt.,

Consolidate Sheet

1.3.2. Name and Average percentage of courses that include experiential learning through project work/field work/internship during last five years

Department : Mechanical Engineering

SL NO	Academic Year	Number of Subjects included from total number of Subjects.	% of Courses
1	2019-20	27/30	90
2	2018-19	25/30	83.3
3	2017-18	27/30	90
4	2016-17	25/30	83.3
5	2015-16	26/30	86.6
		Average Numbers of Courses	**86.64%**

HOD

Principal

PRINCIPAL
Ramachandra College of Engineering
Vatluru (V), Eluru, W. G. Dt.,

RAMACHANDRA
COLLEGE OF ENGINEERING
NH-5 Bypass Road, Vatluru (V), Eluru - 534007, W. G. Dist., A.P.
(Approved by AICTE, New Delhi, and Affiliated to JNT University, Kakinada)
NAAC Accredited with B++, ISO 9001 : 2008 Certified

Consolidate Sheet(Academic Year Wise)

1.3.2. Name and Average percentage of courses that include experiential learning through project work/field work/internship during last five years

Department : Mechanical Engineering **Academic Year:2019-20**

SL NO	Regulation	Name of Subjects Refered from total number of Subjects.
1	R16	Advance Materials
2	R16	Metal Cutting & Machine Tools
3	R16	Production Technology
4	R16	Automobile Engineering
5	R16	Dynamics of Machines
6	R16	Kinematics of Machinery
7	R16	Unconventional Machining Process
8	R16	Design of Machine Members – I
9	R16	Mechanics of Solids
10	R16	Green Engineering Systems
11	R16	Production Planning and Control
12	R16	Metrology
13	R16	Thermodynamics
14	R16	Thermal Engineering – I
15	R16	Thermal Engineering – II
16	R16	Engineering Mechanics
17	R16	Operations Research
18	R16	Fluid Mechanics & Hydraulic machinery
19	R16	Heat Transfer
20	R16	CAD/CAM
21	R16	Finite Element Methods
22	R16	Power Plant Engineering
23	R16	Instrumentation & Control Systems
24	R16	Design of Machine Members – II
25	R16	Metallurgy & Material Science
26	R16	Design for Manufacture
27	R16	Gas Dynamics & Jet Propulsion

HOD

Principal

PRINCIPAL
Ramachandra College of Engineering
Vatluru (V), Eluru, W. G. Dt.,

Consolidate Sheet(Academic Year Wise)

1.3.2. Name and Average percentage of courses that include experiential learning through project work/field work/internship during last five years

Department : Mechanical Engineering **Academic Year:2018-19**

SL NO	Regulation	Name of Subjects Refered from total number of Subjects.
1	R13	Heat Transfer
2	R13	CAD/CAM
3	R13	Finite Element Methods
4	R13	Power Plant Engineering
5	R13	Instrumentation & Control Systems
6	R13	Design of Machine Members – II
7	R13	Metallurgy & Material Science
8	R13	Advance Materials
9	R13	Metal Cutting & Machine Tools
10	R13	Production Technology
11	R13	Automobile Engineering
12	R13	Dynamics of Machines
13	R13	Kinematics of Machinery
14	R13	Unconventional Machining Process
15	R13	Design of Machine Members – I
16	R13	Mechanics of Solids
17	R13	Green Engineering Systems
18	R13	Production Planning and Control
19	R13	Metrology
20	R13	Thermodynamics
21	R13	Thermal Engineering – I
22	R13	Thermal Engineering – II
23	R13	Engineering Mechanics
24	R13	Operations Research
25	R13	Fluid Mechanics & Hydraulic machinery

HOD

Principal

PRINCIPAL
Ramachandra College of Engineering
Vatluru (V), Eluru, W. G. Dt.,

Consolidate Sheet(Academic Year Wise)

1.3.2. Name and Average percentage of courses that include experiential learning through project work/field work/internship during last five years .

Department : Mechanical Engineering **Academic Year:2017-18**

SL NO	Regulation	Name of Subjects Refered from total number of Subjects.
1	R13	Metrology
2	R13	Thermodynamics
3	R13	Thermal Engineering – I
4	R13	Thermal Engineering – II
5	R13	Engineering Mechanics
6	R13	Operations Research
7	R13	Fluid Mechanics & Hydraulic machinery
8	R13	Interactive Computer Graphics
9	R13	Robotics
10	R13	Heat Transfer
11	R13	CAD/CAM
12	R13	Finite Element Methods
13	R13	Power Plant Engineering
14	R13	Instrumentation & Control Systems
15	R13	Design of Machine Members – II
16	R13	Metallurgy & Material Science
17	R13	Advance Materials
18	R13	Metal Cutting & Machine Tools
19	R13	Production Technology
20	R13	Automobile Engineering
21	R13	Dynamics of Machines
22	R13	Kinematics of Machinery
23	R13	Unconventional Machining Process
24	R13	Design of Machine Members – I
25	R13	Mechanics of Solids
26	R13	Green Engineering Systems
27	R13	Production Planning and Control

HOD

Principal

PRINCIPAL
Ramachandra College of Engineering
Vatluru (V), Eluru, W. G. Dt.,

Consolidate Sheet(Academic Year Wise)

1.3.2. Name and Average percentage of courses that include experiential learning through project work/field work/internship during last five years

Department : Mechanical Engineering **Academic Year:2016-17**

SL NO	Regulation	Name of Subjects Refered from total number of Subjects.
1	R13	Advance Materials
2	R13	Metal Cutting & Machine Tools
3	R13	Production Technology
4	R13	Automobile Engineering
5	R13	Dynamics of Machines
6	R13	Kinematics of Machinery
7	R13	Unconventional Machining Process
8	R13	Design of Machine Members – I
9	R13	Mechanics of Solids
10	R13	Metrology
11	R13	Thermodynamics
12	R13	Thermal Engineering – I
13	R13	Thermal Engineering – II
14	R13	Engineering Mechanics
15	R13	Operations Research
16	R13	Fluid Mechanics & Hydraulic machinery
17	R13	Interactive Computer Graphics
18	R13	Robotics
19	R13	Heat Transfer
20	R13	CAD/CAM
21	R13	Finite Element Methods
22	R13	Power Plant Engineering
23	R13	Instrumentation & Control Systems
24	R13	Design of Machine Members – II
25	R13	Metallurgy & Material Science

HOD

Principal

PRINCIPAL
Ramachandra College of Engineering
Vatluru (V), Eluru, W. G. Dt.

Consolidate Sheet

1.3.2.Name and Average percentage of courses that include experiential learning through project work/field work/internship during last five years

Department :- Electronics and Communication Engineering

Sl No	Academic Year	Number of Subjects included from total number of Subjects.	% of Courses
1	2020-21	26/30	86.66%
2	2019-20	26/30	86.66%
3	2018-19	25/30	80.64%
4	2017-18	26/30	86.66%
5	2016-17	25/31	80.64%
		Average Numbers of Courses	**82.44%**

Principal

PRINCIPAL
Ramachandra College of Engineering
Vatluru (V), Eluru, W. G. Dt.,

Consolidate Sheet (Academic Year Wise)

1.3.2. Name and Average percentage of courses that include experiential learning through project work/field work/internship during last five years

Department : Electronics and Communication Engineering **Academic Year:2020-21**

SL NO	Regulation	Name of Subjects Referred from total number of Subjects.
1	R16	EmbeddedSystems
2	R16	CellularAndMobileCommunications
3	R16	WirelessCommunications
4	R16	Wireless SensorNetworks
5	R16	MicroprocessorsAndControllers
6	R19	Random Variables and Stochastic Process
7	R19	Control Systems
8	R16	Computer Networks
9	R19	Switching Thoery and logic Design
10	R16	DigitalCommunications
11	R16	Antennas And Wave Propagation
12	R16	Network Analysis
13	R16	Signals And Systems
14	R16	DigitalIcApplications
15	R16	Computer Architecture & Organization
16	R16	Electronic Circuit Analysis
17	R16	Pulse & Digital Circuits
18	R16	Em Waves and Transmission Lines
19	R16	Computer Networks
20	R16	VlSI Design
21	R16	Bio Medical Engineering
22	R16	Microwave Engineering
23	R16	Electrical Technology
24	R19	Network Analysis
25	R19	Analog Communications
26	R16	Digital Image Processing

HOD

Principal

PRINCIPAL
Ramachandra College of Engineering
Vatluru (V), Eluru, W. G. Dt.,

Consolidate Sheet (Academic Year Wise)

1.3.2. Name and Average percentage of courses that include experiential learning through project work/field work/internship during last five years

Department: Electronics and Communication Engineering **Academic Year:2019-20**

SL NO	Regulation	Name of Subjects Refered from total number of Subjects.
1	R16	SwitchingTheoryandLogicDesign
2	R16	Network Analysis
3	R16	Signals And Systems
4	R16	Random Variables and Stochastic Process
5	R16	Electronic Circuit Analysis
6	R16	ControlSystems
7	R16	ComputerNetworks
8	R16	WirelessCommunications
9	R16	EmbeddedSystems
10	R16	DigitalCommunications
11	R16	Antennas And Wave Propagation
12	R16	MicroprocessorsAndControllers
13	R16	DigitalICApplications
14	R16	Wireless SensorNetworks
15	R16	Computer Architecture & Organization
16	R16	CellularAndMobileCommunications
17	R16	Pulse & Digital Circuits
18	R16	EM Waves and Transmission Lines
19	R16	Computer Networks
20	R16	VlSI Design
21	R16	Radar Systems
22	R16	Optical Communication
23	R16	Digital Image Processing
24	R16	Satellite Communication
25	R16	Bio Medical Engineering
26	R16	Linear IcApplications

HOD

Principal

PRINCIPAL
Ramachandra College of Engineering
Vatluru (V), Eluru, W. G. Dt.,

Consolidate Sheet (Academic Year Wise)

1.3.2.Name and Average percentage of courses that include experiential learning through project work/field work/internship during last five years

Department: Electronics and Communication Engineering **Academic Year:2018-19**

SL NO	Regulation	Name of Subjects Refered from total number of Subjects.
1	R16	Switchingtheory And Logic Design
2	R16	Network Analysis
3	R16	Signals And Systems
4	R16	Random Variables and stochastic Process
5	R16	Electronic Circuit Analysis
6	R16	ControlSystems
7	R16	COMPUTERNETWORKS
8	R16	WirelessCommunications
9	R16	Embeddedsysytems
10	R16	Digitalcommunications
11	R16	Antennas And Wave Propagation
12	R16	Microprocessorsandcontrollers
13	R16	Digitalicapplications
14	R16	Wireless SensorNetworks
15	R16	Computer Architecture & Organization
16	R16	CellularAndMobileCommunications
17	R16	Pulse & Digital Circuits
18	R16	EM Waves and Transmission Lines
19	R16	Computer Networks
20	R16	VlSI Design
21	R16	Radar Systems
22	R16	Optical Communication
23	R16	Satellite Communication
24	R16	Bio Medical Engineering
25	R16	Linear ICApplications

HOD

Principal

PRINCIPAL
Ramachandra College of Engineering
Vatluru (V), Eluru, W. G. Dt.,

Consolidate Sheet (Academic Year Wise)

1.3.2. Name and Average percentage of courses that include experiential learning through project work/field work/internship during last five years

Department: Electronics and Communication Engineering **Academic Year:2017-18**

SL NO	Regulation	Name of Subjects Refered from total number of Subjects.
1	R16	SwitchingTheoryandLogicDesign
2	R16	Network Analysis
3	R16	Signals And Systems
4	R16	Random Variables and Stochastic Process
5	R16	Electronic Circuit Analysis
6	R16	ControlSystems
7	R13	ComputerNetworks
8	R13	WirelessCommunications
9	R13	EmbeddedSysytems
10	R13	DigitalCommunications
11	R13	Antennas And Wave Propagation
12	R13	MicroprocessorsAndControllers
13	R13	DigitalIcApplications
14	R13	Wireless SensorNetworks
15	R13	Computer Architecture & Organization
16	R13	CellularAndMobileCommunications
17	R13	Pulse & Digital Circuits
18	R13	Em Waves and Transmission Lines
19	R13	Computer Networks
20	R13	Vlsi Design
21	R13	Radar Systems
22	R13	Optical Communication
23	R13	Digital Image Processing
24	R13	Satellite Communication
25	R13	Bio Medical Engineering
26	R13	Linear IcApplications

HOD

Principal

PRINCIPAL
Ramachandra College of Engineering
Vatluru (V), Eluru, W. G. Dt.,

Consolidate Sheet (Academic Year Wise)

1.3.2. Name and Average percentage of courses that include experiential learning through project work/field work/internship during last five years

Department : Electronics and Communication Engineering **Academic Year:2016-17**

SL NO	Regulation	Name of Subjects Refered from total number of Subjects.
1	R13	EmbeddedSystems
2	R13	MicroprocessorsAndControllers
3	R13	DigitalIcApplications
4	R13	CellularAndMobileCommunications
5	R13	Wireless SensorNetworks
6	R13	ControlSystems
7	R13	ComputerNetworks
8	R13	WirelessCommunications
9	R13	SwitchingTheoryAndLogicDesign
10	R13	DigitalCommunications
11	R13	Antennas And Wave Propagation
12	R13	Network Analysis
13	R13	Signals And Systems
14	R13	Probability Theory And Stochastic Process
15	R13	Computer Architecture & Organization
16	R13	Electronic Circuit Analysis
17	R13	Pulse & Digital Circuits
18	R13	Em Waves and Transmission Lines
19	R13	Computer Networks
20	R13	VlSI Design
21	R13	Radar Systems
22	R13	Optical Communications
23	R13	Radar Systems
24	R13	Satellite Communications
25	R13	Digital Signal Processing

HOD

Principal

PRINCIPAL
Ramachandra College of Engineering
Vatluru (V), Eluru, W. G. Dt.,

Consolidate Sheet

1.3.2. Name and Average percentage of courses that include experiential learning through project work/field work/internship during last five years

Department: Computer Science & Engineering

SL NO	Academic Year	Regulation	Number of Subjects included from total number of Subjects.	% of Courses
1	2016-17	R13	25/31	80.64%
2	2017-18	R13	25/31	80.64%
3	2018-19	R16	24/30	80.00%
4	2019-20	R16	24/30	80.00%
5	2020-21	R16	24/30	80.00%
	Average Numbers of Courses			**80.256%**

Principal

PRINCIPAL
Ramachandra College of Enginee
Vatluru (V), Eluru, W. G. Dt.,

Consolidate Sheet (Academic Year Wise)

1.3.2. Name and Average percentage of courses that include experiential learning through project work/field work/internship during last five years

Department: Computer Science & Engineering **Academic Year: 2020-2021**

SL NO	Regulation (R13/R16)	Name of Subjects Referred from total number of Subjects.
1	R16	Computer Programming
2	R16	Object Oriented Programming
3	R16	Java Programming
4	R16	Database Management Systems
5	R16	Object Oriented Analysis and Design using UML
6	R16	Unified Modeling Lab
7	R16	Database Management System Lab
8	R16	Java Programming Lab
9	R16	Design and Analysis of Algorithms
10	R16	Software Testing Methodologies
11	R16	Software Testing Lab
12	R16	Software Architecture & Design Patterns
13	R16	Web Technologies
14	R16	Software Architecture& Design Patterns Lab
15	R16	Web Technologies Lab
16	R16	Software Project Management
17	R16	Software Engineering
18	R16	Scripting Languages
19	R16	Artificial Intelligence
20	R16	Internet of Things
21	R16	Digital Signal Processing
22	R16	Cyber Security
23	R16	Embbeded Systems
24	R16	Big Data Analytics

HOD

Principal

PRINCIPAL
Ramachandra College of Engineering
Vatluru (V), Eluru, W. G. Dt.,

Consolidate Sheet (Academic Year Wise)

1.3.2. Name and Average percentage of courses that include experiential learning through project work/field work/internship during last five years

Department: Computer Science & Engineering **Academic Year: 2019-2020**

SL NO	Regulation (R13/R16)	Name of Subjects Referred from total number of Subjects.
1.	R16	Computer Programming
2.	R16	Object Oriented Programming
3.	R16	Java Programming
4.	R16	Database Management Systems
5.	R16	Object Oriented Analysis and Design using UML
6.	R16	Unified Modeling Lab
7.	R16	Database Management System Lab
8.	R16	Java Programming Lab
9.	R16	Design and Analysis of Algorithms
10.	R16	Software Testing Methodologies
11.	R16	Software Testing Lab
12.	R16	Software Architecture & Design Patterns
13.	R16	Web Technologies
14.	R16	Software Architecture& Design Patterns Lab
15.	R16	Web Technologies Lab
16.	R16	Software Project Management
17.	R16	Software Engineering
18.	R16	Scripting Languages
19.	R16	Artificial Intelligence
20.	R16	Internet of Things
21.	R16	Digital Signal Processing
22.	R16	Cyber Security
23.	R16	Embbeded Systems
24.	R16	Big Data Analytics

HOD

Principal

PRINCIPAL
Ramachandra College of Engineering
Vatluru (V), Eluru, W. G. Dt.,

Consolidate Sheet (Academic Year Wise)

1.3.2. Name and Average percentage of courses that include experiential learning through project work/field work/internship during last five years

Department: Computer Science & Engineering **Academic Year: 2018-2019**

SL NO	Regulation (R13/R16)	Name of Subjects Referred from total number of Subjects.
1.	R16	Computer Programming
2.	R16	Object Oriented Programming
3.	R16	Java Programming
4.	R16	Database Management Systems
5.	R16	Object Oriented Analysis and Design using UML
6.	R16	Unified Modeling Lab
7.	R16	Database Management System Lab
8.	R16	Java Programming Lab
9.	R16	Design and Analysis of Algorithms
10.	R16	Software Testing Methodologies
11.	R16	Software Testing Lab
12.	R16	Software Architecture & Design Patterns
13.	R16	Web Technologies
14.	R16	Software Architecture& Design Patterns Lab
15.	R16	Web Technologies Lab
16.	R16	Software Project Management
17.	R16	Software Engineering
18.	R16	Scripting Languages
19.	R16	Artificial Intelligence
20.	R16	Internet of Things
21.	R16	Digital Signal Processing
22.	R16	Cyber Security
23.	R16	Embedded Systems
24.	R16	Big Data Analytics

HOD

Principal

PRINCIPAL
Ramachandra College of Engineering
Vatluru (V), Eluru, W. G. Dt.,

Consolidate Sheet (Academic Year Wise)

1.3.2. Name and Average percentage of courses that include experiential learning through project work/field work/internship during last five years

Department: Computer Science & Engineering **Academic Year: 2017-2018**

SL NO	Regulation (R13/R16)	Name of Subjects Referred from total number of Subjects.
1	R13	C Programming Lab
2	R13	Professional Ethics and Human Values
3	R13	Computer Programming
4	R13	Mobile Application Development Lab
5	R13	Object Oriented Programming through C++
6	R13	Mathematical Foundations of Computer Science
7	R13	Digital Logic Design
8	R13	Data Structures
9	R13	Object Oriented Programming Lab
10	R13	Data Structures Lab
11	R13	Digital Logic Design Lab
12	R13	Java Programming
13	R13	Advanced Data Structures
14	R13	Computer Organization
15	R13	Formal Languages and Automata Theory
16	R13	Advanced Data Structures Lab
17	R13	Java Programming Lab
18	R13	Free Open Source Software(FOSS) Lab
19	R13	Data Communication
20	R13	Principles of Programming Languages
21	R13	Database Management Systems
22	R13	Operating Systems
23	R13	UML & Design Patterns
24	R13	Mobile Computing

HOD

Principal

PRINCIPAL
Ramachandra College of Engineering
Vatluru (V), Eluru, W. G. Dt.,

Consolidate Sheet (Academic Year Wise)

1.3.2. Name and Average percentage of courses that include experiential learning through project work/field work/internship during last five years

Department: Computer Science & Engineering **Academic Year: 2016-2017**

SL NO	Regulation (R13/R16)	Name of Subjects Referred from total number of Subjects.
1.	R13	C Programming Lab
2.	R13	Professional Ethics and Human Values
3.	R13	Computer Programming
4.	R13	Mobile Application Development Lab
5.	R13	Object Oriented Programming through C++
6.	R13	Mathematical Foundations of Computer Science
7.	R13	Digital Logic Design
8.	R13	Data Structures
9.	R13	Object Oriented Programming Lab
10.	R13	Data Structures Lab
11.	R13	Digital Logic Design Lab
12.	R13	Java Programming
13.	R13	Advanced Data Structures
14.	R13	Computer Organization
15.	R13	Formal Languages and Automata Theory
16.	R13	Advanced Data Structures Lab
17.	R13	Java Programming Lab
18.	R13	Free Open Source Software (FOSS) Lab
19.	R13	Data Communication
20.	R13	Principles of Programming Languages
21.	R13	Database Management Systems
22.	R13	Operating Systems
23.	R13	UML & Design Patterns
24.	R13	Mobile Computing

HOD

Principal

PRINCIPAL
Ramachandra College of Engineering
Vatluru (V), Eluru, W. G. Dt.,

Consolidate Sheet

1.3.2. Name and Average percentage of courses that include experiential learning through project work/field work/internship during last five years

Department : **MBA**

SL NO	Academic Year	Number of Subjects included from total number of Subjects.	% of Courses
1	2020- 21	24/28	83.42%
2	2019-20	23/28	81.40%
3	2018-19	23/28	82.16%
4	2017-18	23/28	82.07%
5	2016-17	23/28	82..14%
Average Numbers of Courses			**82.23**

HOD

Principal

PRINCIPAL
Ramachandra College of Engineering
Vatluru (V), Eluru, W. G. Dt.

Consolidate Sheet (Academic Year Wise)

1.3.2. Name and Average percentage of courses that include experiential learning through project work/field work/internship during last five years

Department : MBA

Academic Year:2020 – 21

SL NO	Regulation(R16)	Name of Subjects Refered from total number of Subjects.
1	R19	Project Management
2	R19	Strategic Management
3	R19	Performance Evaluation and Compensation Management
4	R19	Human Resource Metrics and Analytics
5	R19	Manpower Planning, Recruitment, and Selection
6	R19	Labor Welfare and employment laws
7	R19	International HRM
8	R19	Employee Relations and Engagement
9	R19	Strategic HRM
10	R19	Human Resources Development
11	R19	Management and Organizational Behavior
12	R19	Legal and Business Environment
13	R19	Business Communication and Soft skills
14	R19	Cross Cultural Management
15	R19	Rural Innovation projects
16	R19	Human Resource Management
17	R19	Marketing Management
18	R19	Innovation and Entrepreneurship
19	R19	Supply Chain Management and Analytics
20	R19	Industrial Project based on Summer Internship
21	R19	Financial Risk Management
22	R19	Mergers, Acquisitions and Corporate Restructuring
23	R19	Managing Banks and Financial Institutions
24	R19	Financial Markets and Services

HOD

Principal

PRINCIPAL
Ramachandra College of Engineering
Vatluru (V), Eluru, W. G. Dt.

Consolidate Sheet (Academic Year Wise)

1.3.2. Name and Average percentage of courses that include experiential learning through project work/field work/internship during last five years

Department : MBA

Academic Year:2019 – 20

SL NO	Regulation(R16)	Name of Subjects Refered from total number of Subjects.
1	R19	Management and Organizational Behavior
2	R19	Legal and Business Environment
3	R19	Business Communication and Soft skills
4	R19	Cross Cultural Management
5	R19	Rural Innovation projects
6	R19	Human Resource Management
7	R19	Marketing Management
8	R19	Operations Management
9	R19	Business Research Methods
10	R19	Project Management
11	R19	Strategic Management
12	R19	Performance Evaluation and Compensation Management
13	R19	Human Resource Metrics and Analytics
14	R19	Manpower Planning, Recruitment, and Selection
15	R19	Strategic HRM
16	R19	Human Resources Development
17	R19	Employee Relations and Engagement
18	R19	International HRM
19	R19	Labor Welfare and employment laws
20	R19	Financial Derivatives
21	R19	Financial Risk Management
22	R19	Behavioral Finance
23	R19	Strategic Financial Management

HOD

Principal

PRINCIPAL
Ramachandra College of Engineering
Vatluru (V), Eluru, W. G. Dt.,

Consolidate Sheet (Academic Year Wise)

1.3.2. Name and Average percentage of courses that include experiential learning through project work/field work/internship during last five years

Department : MBA

Academic Year:2018 – 19

SL NO	Regulation(R16)	Name of Subjects Refered from total number of Subjects.
1	R16	Banking and Insurance Management
2	R16	Advance Management Accounting
3	R16	Strategic Financial Management
4	R16	Principles of Management
5	R16	Managerial Communication & Soft skills
6	R16	Business Environment
7	R16	Accounting for Managers
7	R16	Entrepreneurship Development
9	R16	Compensation and Reward Management
10	R16	Managerial Economics
11	R16	Accounting for Managers
12	R16	Quantitative Analysis for Business Decision
13	R16	IT – LAB
14	R16	Organizational Behavior
15	R16	Financial Management
16	R16	Human Resource Management
17	R16	Marketing Management
18	R16	Production and Operations Management
19	R16	Strategic Management
20	R16	Legal Aspects of Business
21	R16	Business Research Methodology
22	R16	Financial Markets and Services
23	R16	Global Financial Management

HOD

Principal

PRINCIPAL
Ramachandra College of Engineering
Vatluru (V), Eluru, W. G. Dt.,

Consolidate Sheet (Academic Year Wise)

1.3.2. Name and Average percentage of courses that include experiential learning through project work/field work/internship during last five years

Department : MBA

Academic Year:2017 – 18

SL NO	Regulation(R16)	Name of Subjects Refered from total number of Subjects.
1	R16	Managerial Economics
2	R16	Accounting for Managers
3	R16	Quantitative Analysis for Business Decision
4	R16	IT – LAB
5	R16	Organizational Behavior
6	R16	Financial Management
7	R16	Human Resource Management
8	R16	Marketing Management
9	R16	Production and Operations Management
10	R16	Strategic Management
11	R16	Legal Aspects of Business
12	R16	Business Research Methodology
13	R16	Financial Markets and Services
14	R16	Global Financial Management
15	R16	Banking and Insurance Management
16	R16	Advance Management Accounting
17	R16	Strategic Financial Management
18	R16	Principles of Management
19	R16	Managerial Communication & Soft skills
20	R16	Business Environment
21	R16	Accounting for Managers
22	R16	Entrepreneurship Development
23	R16	Compensation and Reward Management

HOD

Principal

PRINCIPAL
Ramachandra College of Engineering
Vatluru (V), Eluru, W. G. Dt.,

Consolidate Sheet (Academic Year Wise)

1.3.2. Name and Average percentage of courses that include experiential learning through project work/field work/internship during last five years

Department : MBA

Academic Year:2016 – 17

SL NO	Regulation(R16)	Name of Subjects Refered from total number of Subjects.
1	R16	Business Research Methodology
2	R16	Financial Markets and Services
3	R16	Global Financial Management
4	R16	Banking and Insurance Management
5	R16	Advance Management Accounting
6	R16	Strategic Financial Management
7	R16	Principles of Management
8	R16	Managerial Communication & Soft skills
9	R16	Business Environment
10	R16	Accounting for Managers
11	R16	Managerial Economics
12	R16	Accounting for Managers
13	R16	Quantitative Analysis for Business Decision
14	R16	IT – LAB
15	R16	Organizational Behavior
16	R16	Financial Management
17	R16	Human Resource Management
18	R16	Marketing Management
19	R16	Production and Operations Management
20	R16	Strategic Management
21	R16	Legal Aspects of Business
22	R16	Business Ethics & Corporate Governance
23	R16	Logistic and Supply Chain Management

HOD

Principal

PRINCIPAL
Ramachandra College of Engineering
Vatluru (V), Eluru, W. G. Dt.,

RAMACHANDRA
COLLEGE OF ENGINEERING
NH-5 Bypass Road, Vatluru (V), Eluru - 534007, W. G. Dist., A.P.
Approved by AICTE
Permanently Affiliated to JNTUK
Recognized by UGC 2(f) & 12(B)
Accredited by NAAC B++
Accredited by NBA (ME, ECE, CSE)
ISO 9001 : 2015 Certified

Department Civil Engineering

Academic Year 2020-21

Average percentage of courses that include experiential learning through project work/field work/internship during last five years

COURSE NO	COURSE NAME	PAGE NO
1	GEO-TECHNICAL ENGG-I	3,8-17
2	GROUND IMPROVEMENT TECH	18-21
3	SOIL MECHANICS	22-24
4	GEO-TECHNICAL ENGG-II	25-40
5	STRENGTH OF MATERIALS	41-46
6	SOIL MECHANICS	47-60
7	GEO-TECHNICAL ENGG-II	61-63
8	TRANSPORTATION ENGG	4-24

“An Experimental Study to Improve the soil stability using Terrazyme and Phosphogypsum in Rigid Pavement”

A PROJECT REPORT
SUBMITTED TO
JWAHARLAL NEHRU TECHNOLOGICAL UNIVERSITY, KAKINADA
In partial fulfillment of the requirement for the award of the degree of
BACHELOR OF TECHNOLOGY

IN

CIVIL ENGINEERING

Submitted by

K . Jyotshna Priya	(17ME1A0133)
Sk. Heena kousar	(18ME5A0111)
A. Mohith Chowdary	(18ME5A0101)
T .Santhosh	(17ME1A0155)
M .Ganesh	(17ME1AO138)
Ch. Chaitanya	(17ME1A0114)
N. Balaji	(17ME1A0141)

Under the Esteemed Guidance of

Mr. “RAMU KASAGANI”

“Asst Professor,M.Tech”

DEPARTMENT OF CIVIL ENGINEERING

RAMACHANDRA COLLEGE OF ENGINEERING, ELURU

(Approved by AICTE New Delhi, Affiliated to JNTU, KAKINADA)

RAMACHANDRA
COLLEGE OF ENGINEERING
NH-16 Bypass Road, Vatluru (V), Eluru-534007, W.G Dt., A.P.

Approved by AICTE
Permanently Affiliated to JNTUK
Recognized by UGC 2(f) & 12(B)
Accredited by NAAC B++
Accredited by NBA (ME, ECE, CSE)
ISO 9001 : 2015 Certified

Department of Civil Engineering

RAMACHANDRA
COLLEGE OF ENGINEERING

BONAFIDE CERTIFICATE

This is to certify that the Mini Project report entitled "***An experimental study to improve the soil stability using terrazyme and phosphogypsum in rigid pavements***" submitted by K.JYOTSHNA PRIYA(17ME1A0133), A.MOHITH CHOWDARY (18ME5A0101), M.GANESH (17ME1A0138) CH.CHAITANYA (17ME1A0114), N.BALAJI (17ME1A0141) , T.SANTHOSH KUMAR (17ME1A0155), SK.HEENA KOUSAR (18ME5A0111) in partial fulfillment of the requirements for the award of degree of **Bachelor of Technology** in **Civil Engineering** from **Jawaharlal Nehru Technological University** Kakinada, Andhra Pradesh is record of bonafide work carried out during the academic year 2019-2020.

K.JYOTSHNA PRIYA	(17ME1A0133)
A.MOHITH CHOWDARY	(18ME5A0101)
M.GANESH	(17ME1A0138)
CH.CHAITANYA	(17ME1A0114)
N.BALAJI	(17ME1A0141)
T.SANTHOSH KUMAR	(17ME1A0155)
SK.HEENA KOUSAR	(18ME5A0111)

Under the supervision and guidance of

Internal Guide
Mr.K Ramu.
Assistant professor, M Tech.

Head of the Department
Prof.Ch.Veerotham kumar.
Associate professor M.Tech.(Ph.D.)

HEAD
Civil Engineering
Ramachandra College of Engineering
VATLURU, ELURU-534 007

30/7/2021
INTERNAL EXAMINER

EXTERNAL EXAMINAR

ACKNOWLEDGEMENT

With great pleasure we want to take this opportunity to express our heartfelt gratitude to all the people who helped in making this mini project work a grand success.

We express our deep sense of gratitude to our beloved C**hairman Sri G.S.Ramachandra Rao and honorable Secretary & Correspondent Sri K. Venu Gopal** for their constant guidance throughout our mini project work.

We are grateful to our respected **Principal Dr. Dola Sanjay S** for his valuable suggestions and guidance given by him during the execution of this mini project work.

We would like to thank **Prof. Ch.Veerotham Kumar**, **Head of the Department of Civil Engineering,** for being moral support throughout the period of our study.

With immense pleasure and deep sense of gratitude, I wish to express my sincere thanks to my guide "**Mr.RAMU KASAGANI"**, "Assistant Professor", Department Of Civil Engineering Ramachandhra College Of Engineering, Eluru, without his motivation and continuous encouragement, this mini project work would not have been successfully completed.

We would like to thank the **Teaching & Non- Teaching staff of CIVIL Department** for sharing their knowledge with us.

K.Jyotshna Priya (17ME1A0133)
Sk.Heena kousar (18ME5A01110)
A.Mohith chowdary (18ME5A0101)
T.Santhosh (17ME1A0155)
M.Ganesh (17ME1AO138)
Ch.Chaitanya (17ME1A0114)
N.Balaji (17ME1A0141)

COURSE NO-1

ABSTRACT

It is a well-known fact that a construction is as strong as its foundations are now a days the construction sites with good soils for foundations are fewer and fewer one of the most encountered issue on sites, especially in road construction is the presence of highly cohesive soils, soils that are easily affected by the change of the water content.

Active clay soils present a problematic challenge for civil and geotechnical engineers all over the world. Key aspects that need identification when dealing with expansive soils include: soil properties, suction/water conditions, water content variations temporal and spatial (generated by trees and the seasonal change) and the geometry /stiffness of foundations and associated structures built on active shrink/swell soils. Stabilization procedures are available in order to reduce or completely eliminate the swelling potential of expansive clays. The problematic soil is removed and replaced by a good quality material or treated using mechanical and /or chemical stabilization different procedures can be used to improve the geotechnical characterstics of problematic soils by treating in-situ. One of the preferred solutions for soil stabilization is treatment with mineral binders. The solution has been proven to be effective of various types of cohesive soils.

Phosphogypsum is a primary by product of the wet acid process for producing phosphoric acid from phosphate rock. It is largely calcium sulphate and has been given the name phosphogypsum. It contains impurities of free phosphoric acid, phosphates ,flourides and organic matter that adhere to the surface of gypsum crystals and also substituted in the crystal lattice of gypsum. It is used to improve the swelling properties of an expansive soil.

Terrazyme is a liquid enzyme which is organic in nature and is formulated from the vegetable and fruit extract. It is brown in color with smell of molasses and can be easily used without the need of masks or gloves. It is easily mixed withwater and for optimal results should be diluted with optimum moisture content of that soil. This decreases the swelling capacity of the soil particles

CONTENTS

Title :	Page No.
Certificate	i
Acknowledgement	ii
Abstract	iii
Contents	iv
List of Figures	v
List of Table	vi

Chapter 1: Introduction

1.1	Introduction	1
1.2	Problem statement	
1.3	Objective of the study	

Chapter 2: Review of Literatures

2.1	General
2.2	Characteristics of black cotton soil
2.3	Behavior of black cotton soil
2.4	Studies on black cotton soil
2.5	Problems associated with black cotton soil
2.5.1	General
2.5.2	Damages to rthe pavement sub grade
2.6	Remedial measures to overcome problems

Chapter 3: Methodology

3.1	Essential of stabilization
3.2	Methods of soil stabilization
3.2.1	Cement stabilization
3.2.2	Bituminous stabilization
3.2.3	Lime stabilization
3.2.4	Mechanical stabilization
3.2.5	Thermal stabilization
3.2.6	Chemical stabilization

Chapter 4: Experimental Materials

4.1	Materials used
4.1.1	Soil sample
4.1.2	Phosphogypsum
4.1.3	terrazyme

Chapter 5: Experimental investigation

5.1 Grain size analysis
5.2 Specific gravity
5.3 Atterberg's limit
5.3.1 Liquid limit
5.3.2 Plastic limit
5.4 Compaction test
5.5 Swelling index

Chapter 6: Results and Conclusion

6.1 Grain size analysis
6.2 Specific gravity
6.3 Atterberg's limit
6.3.1 Liquid limit
6.3.2 Plastic limit
6.4 Compaction test
6.5 Swelling index
6.6 Calfornia Bearing Ratio(CBR)
6.7 Unconfined compressive strength(UCS)

References

LIST OF FIGURES

S.NO	FIG.NO:	DESCRIPTION	PAGE NO:
1	2.1	Shows pot hole on bituminous pavement	
2	2.2	Shows rutting on bituminous pavement	
3	2.3	Shows longitudinal cracks	
4	3.1	Cement stabilization	
5	3.2	Bituminous stabilization	
6	3.3	Lime stabilization	
7	3.4	Mechanical stabilization	
8	3.5	Chemical stabilization	
9	4.1	Shows soil sample	
10	4.2	Phosphogypsum	
11	4.3	Terrazyme	
12	5.1	Set of fine sieves	
13	5.2	Liquid limit apparatus	
14	5.3	Compaction apparatus	
15	5.4	Swelling index apparatus	
16	6.1	Graph for grain size analysis of soil sample	
17	6.2	Grain size analysis for soil sample and phosphogypsum	
18	6.3	Graph for grain size analysis of soil sample and terrazyme	
19	6.4	Graph for compaction after adding phosphogypsum	
20	6.5	Graph for compaction after adding terrazyme	
21	6.6	Compaction after adding phosphogypsum and terrazyme	
22	6.7	Presents the CBR values of un treated soil	
23	6.8	CBR value for soil sample treated with 20% phosphogypsum	
24	6.9	CBR values of 20% phosphogypsum and 20% terrazyme	
25	6.10	CBR with various percentages of phosphogypsum and terrazyme	
26	6.11	Presents the UCS values of untreated soil sample	
27	6.12	UCS values for soil sample treated with 20% phosphogypsum	
28	6.13	UCS value of 20% phosphogypsum and 20% terrazyme	
29	6.14	UCS with various percentages of phosphogypsum and terrazyme	

LIST OF TABLES

S. No.	TABLE No.	DESCRIPTION	PAGE NO
1	5.1	Classification of soils	
2	5.2	Grain size analysis	
3	5.3	Shows specific gravity values	
4	5.4	Number of blows vs water content	
5	5.5	Water content of 3mm soil	
6	5.6	Shows values of OMC and MDD	
7	6.1	Grain size analysis of soil sample	
8	6.2	Grain size analysis of soil sample and phosphogypsum	
9	6.3	Grain size analysis of soil sample and terrazyme	
10	6.4	Specific gravity values of phosphogypsum	
12	6.5	Specific gravity values of terrazyme	
13	6.6	Values of liquid limit after adding phosphogypsum	
15	6.7	Values of liquid limit after adding terrazyme	
16	6.8	Values of plastic limit of soil and phosphogypsum	
17	6.9	Values of plastic limit of soil and terrazyme	
19	6.10	Values of compaction after adding phosphogypsum	
20	6.11	Values of compaction after adding terrazyme	
22	6.12	Values of swelling index of soil sample	
23	6.13	Swelling values after adding phosphogypsum	
24	6.14	Swellng values after adding terrazyme	
24	6.15	CBR with various percentages of phosphogypsum and terrazyme	
25	6.16	UCS with various percentages of phosphogypsum and terrazyme	

CHAPTER-1

INTRODUCTION

Soil stabilization refers to the process of changing soil properties to improve strength and durability. There are many techniques for soil stabilization, including compaction, +dewatering and by adding material to the soil. As a result of soil stabilization, the bearing capacity of the foundation of the structure is increased and its strength, water tightness, resistance to washout, and other properties are improved. Soil stabilization is achieved by injecting cementing materials or chemical solutions into the ground and also by applying electric currents to the ground or heating or cooling it. The basic methods of soil stabilization are cementation, argillization, bituminization, solidification, resinification, methods using electrochemical or thermal action, and artificial freezing.

The soil stabilization includes both physical stabilization [such as dynamic compaction] and chemical stabilization [such as mixing with cement, terrazyme, lime, and lime by-Products, etc] (Materials & Tests Division, Geotechnical Section, Indiana, 2002). Chemical stabilization involves mixing chemical additives (binding agents) with natural soils to remove moisture and improve strength properties of the soil (sub-grade). Generally, the role of the stabilizing (binding) agent in the treatment process is either reinforcing of the bounds between the particles or filling of the pore spaces.

Expansive soils swell when they are exposed to water and shrink when they dry.therefore soil moisture content is primary factor that affects the change of its volume.

Expansive soils generally exist in semi arid regions which are located in the tropical and temperature climate zones.In all five continents for this reason, expansive soils are a worldwide problem. Swelling and shrinkage phenomena occur in expansive clay when moisture rises and declines, respectively. Due to swelling and shrinkage, severe destructions in light weight structures in pavements and buried structures in expansive clay soils have been reported. In recent years, many researchers have focused on the phenomena and improving constitute and computational models applied to the engineering behavior of expansive soils.

In this study, phosphogypsum produced from fertilizer factory was used to improve the swelling properties of an expansive soil. A small amount of this waste is used in soil and road stabilization and the remaining of it usually is deposited in open areas or dumped to river and sea, around the world. Researchers have been recently directed towards the use of Phosphogypsum with the other wastes such as terrazyme , GGBFS (ground granulated blast furnance slag).

The results of the annual effective dose and radium equivalent activity index shows that the PG sample examinated can be used as building raw material and filling material with out additional radiological risk. Considering the amount of natural stabilization material which decreases day by day, phosphogypsum as a by-product which can be easily obtained in abundance from the fertilizer plants can be used as an alternative expansive soil stabilization materials.

1.2 PROBLEM STATEMENT

The adverse effect of increase in moisture content on the soil behavior has been a major concern among the geotechnical as well as pavement engineers. Soil possesses excellent performance at the optimum moisture content or below the optimum moisture content (dry side of Optimum). However the strength and stiffness of soil reduces drastically as the moisture content increase beyond the optimum (wet side of optimum). Due to soft nature of soil in India and with the presence of high water table strength/stiffness of sub grade soil is too weak to support the pavement loads.

In addition, some soils have great tendency to shrink/swell with moisture content (black cotton soil) and often creates serviceability problems during or after construction of the foundations or pavement layers. The replacement of such soil with better quality of borrow soil fill is not always a good option especially in pavements due to associated cost of excavation and hauling of the materials. In order to cope with this problem, various techniques have been applied by engineers depending upon the type of the soil.

For example, mechanical stabilization is preferred to coarse grained soils. But, with soft clay sub grade and high water table, it is customary to treat the soils with some chemical stabilizers or calcium rich stabilizers. These stabilizers not only provide the working platform for construction through enhancing the strength of treated sub grade layer; but also can give the relatively stable sub base for pavement. The shrink/swell characteristic of the soils is a function of in situ moisture content. Most of the soils have in situ moisture content higher than the optimum, and therefore the prediction of sub grade behavior based only on the property around the optimum or near the optimum on either side is not enough. The use of different stabilizers based on the properties of the raw to treated/stabilized sub grade soil has made it easier to construct pavement on high moisture contents and weak soil sub grade

1.3 OBJECTIVE OF THE STUDY

Now a day's technologies and population increases abruptly as a result increase in utilization of land for various purposes like construction of roads, buildings, bridges, apartments, shopping malls etc. But the soil conditions at all sites are not favorable for construction because of presence of very weak soil. In order to overcome this problem stabilization is necessary.

Many materials are used for stabilizing soil like lime, rice husk ash, quarry dust, ground nut shell ash etc. But we are interested to use naturally available waste materials for stabilizing which were easily and protects the environment from harmful effects for this we choose Phosphogypsum and Terrazyme.

The main objectives of this experimental study are:-

- To find out the behavior of soil sample when stabilized with phosphogypsum and its suitability for the pavement sub grade
- To evaluate the behavior of soil sample when stabilized with Terrazyme and its suitability for the pavement sub grade
- To evaluate the performance of stabilized soil sample with optimum percentages of phosphogypsum and Terrazyme
- For upgrading the properties of soil for construction of different structures
- To enhance the engineering properties of clayey soil(OMC, MDD, and CBR)
- For consumption of waste and to increase bearing capacity of soil
- Checking for the suitability of sub grade material by using CBR
- The changes in plasticity, swelling characteristics and strength parameters of treated sample indicated that addition of phosphogypsum can improve the engineering performance of swelling clay samples

CHAPTER-2

LITERATURE REVIEW

Soil is one of nature's most abundant construction materials. Almost all construction is built with or upon soil. When unsuitable construction conditions are encountered due to soil, a contractor has four options:

(1) Find a new construction site
(2) Redesign the structure so it can be constructed on the poor soil
(3) Remove the poor soil and replace it with good soil
(4) Improve the engineering properties of the site soils

In general; Options 1 and 2 tend to be impractical today, while in the past, Option 3 has been the most commonly used method. However, due to improvement in technology coupled with increased transportation costs, Option 4 is being used more often today and is expected to dramatically increase in the future. Improving an on-site (in situ) soil's engineering properties is referred to as either "soil modification" or "soil stabilization." The term "modification" implies a minor change in the properties of a soil, while stabilization means that the engineering properties of the soil have been changed enough to allow field construction to take place.

2.1 GENERAL

Black cotton soil is very sensitive to change the stress system, moisture content and system chemistry of the pore fluid. Geotechnical engineers feel a necessity to improve the behavior of these deposits using anyone of the available ground improvement techniques. The Black cotton soil is generally found in the states of west Bengal, Orissa, Andhra Pradesh ,Tamil Nadu, Kerala, Karnataka, Maharashtra and some parts of Gujarat (plate 2.1).Black cotton soil existing in these regions is weak and compressible in nature. A comprehensive review of

Literature indicates that considerable amount of work related to determination of engineering behavior of Black cotton soil has been carried out worldwide since last 50 years. Amongst various contributions, the investigations on physical, Chemical and mineralogical properties of

Black cotton soil conducted by Eden et al. (1957), Noorani (1984), Sridhar anet al. (1989),Mathew et al' (1997) and chew et al. (2004) are worthy to note. Significant research on strength and stiffness characteristics was performed by Koutsoftas et al. (1987) and Zhou et ar. (2005).Marine structures are usually subjected to wave induced cyclic stresses which are induced in the soil. Remarkable works of Idriss et al. (1978), vucetic et al. (1988), Kagawa (1992) and Hyde et al. (1993) related to properties of Black cotton soil under cyclic stress are notable. The effect of steel industrial wastes on soft soils were presented by AshwaniKumar et.al (1998);Bhadra, T. K et.al (2002); Dr. D.D. Higgins (2005); Dr. D.

Koteswara Rao (2006 to 2013). Black cotton soil is uncommon type of clay and normally exists in soft consistency. Black cotton soil deposit of east coast of India was used for the testing with the aim to investigate its engineering properties.During construction of well foundation for a marine structure in the offshore area (about 10 m off the shoreline) of Visakhapatnam port at East coast of India, the subsoil was excavated. The soil collected from a depth of about 10 to 12 m was used for investigation.

2.2 CHARACTERSTICS OF BLACK COTTON SOIL

Black cotton soils very soft and plastic Cray found in major regions around the world.Generally, the Black cotton soil is available at ful1y saturated condition in the costal corridor and the natural water content of the Black cotton soils always greater than its liquid limit. Many attempts have been made to determine the characteristics and strength parameters of the Black cotton soil. Study reveals that the compressibility and the strength of the Black cotton soil cause more differential settlement in the supporting structure. From the previous studies it has been found that the soft Black cotton soils very sensitive to change the stress system, moisture content and system chemistry of the pore fluid. The mineral structure of the clay also plays a vital role in exhibiting its behavior under load for e.g. clay minerals with expanding lattice structure shows high compressibility and moderate swelling when comes in contact with moisture. The Black cotton soil is very hard when it is dry but loses its strength on wetting.

2.3 BEHAVIOUR OF BLACK COTTON SOIL

The Black cotton soils are highly compressible soft clays and also it exhibits moderate swelling when comes in contact with moisture. This behavior is due to the presence of clay mineral with expanding lattice structure. The Black cotton soils very hard when it is dry but loses its strength on wetting. The Black cotton soil get cracks as shown in the plate2.3 on drying and in the worst cases the width of the cracks is almost 250 mm to 500 mm and travel down to 1.00m beneath the ground level.

Clay soils shrink under dry conditions and expand once there is adequate water. For houses built in clay soils, this process can create serious problems with walls and foundations. The expansion and swelling of the clay soil surrounding a foundation exerts a tremendous amount of pressure that can crack walls. Clay has a high pH, which means that it can be quite alkaline. A soil pH affects the solubility and availability of nutrients, 14 of the 17 essential nutrients for plants are absorbed from the soil and must be dissolved before they can be absorbed. Nutrients can be less available in alkaline soils. Clay soils, however, have negatively charged particles that attract positively ‘charged mineral particles, such as potassium, magnesium and calcium.

2.4 STUDIES ON BLACK COTTON SOIL:

PHOSPHOGYPSUM

Mishra and Mathur (2004) had stabilized expansive soil using phosphogypsum and observed the optimum percentage as 40%.

Degirmenci et al. (2007) had investigated the effect of phosphogypsum on liquid limit (wL), plastic limit (wP), IP, OMC, MDD and UCS of expansive soil. By stabilization with phosphogypsum, the IP reduced, MDD increased, OMC decreased, and UCS increased.

Yilmaz and Civelekoglu (2009) had studied the effect of gypsum on Atterberg's limit, UCS, Sp, and cation exchange capacity of bentonite and concluded that up to 5% addition of gypsum the properties of expansive clay improved significantly.

Divya Krishnan et al. (2014) had studied the combined effect of class C Terrazyme and phosphogypsum on UCS of expansive soil and had found that UCS increases by addition of these two stabilizers which increases further with increase in curing period.

terrazyme

Lacuoture and Gonzalez (1995) conducted a comprehensive study of the Terrazyme soil stabilizer product and its effectiveness on sub-base and sub-grade soils.

Vijay Rajorial, Suneet Kaur (2014) carried out a theoretical evaluation of enzyme. Reduction of about 18 to 26 % is seen in cost of construction of roads by using Terrazyme as a soil stabilizer, constructed by public work department in Maharashtra. Structures made of bio enzyme are economical and have greater strength.

Venika Saini et al (2015) In this work, the performance of Bio-Enzymatic soil has been scrutinized. From the results obtained by the tests conducted on the soil, the following observations were made. Bio Enzymes are organic, non-toxic and biodegradable in nature. The end products obtained by usage of Terrazyme are biodegradable in nature and their effect is perpetual

2.5 PROBLEMS ASSOCIATED WITH BLACK COTTON SOIL

2
2.1 shows pot hole on bituminious pavement

2.5.1 GENERAL

Among the various damages, the damage caused by the Black cotton soil to the pavements and also for foundation beds are mentioned here in detail. High compressibility and moderate swelling nature of the Black cotton soil on inhabitation of water during the monsoon and reduce density or shrinkage occurs because of evaporation of water in summer and become hard due to increased density and this trend of soil decreases with depth. The volumetric deformation in these soils is attributed to seasonal variations in the ground water profile resulting in changes in moisture content.

During summer, polygonal shrinkage cracks (prate 2.4) occurs near the surface, extending to depth of about 1.5m, indicating a high potential for compressibility. The depth of cracking indicates the depth of active zone in which significant volume change occurs, which is defined as thickness of soil in which moisture deficiency exists. The entire stratum of Black cotton soil in the field may not be active. Besides, as most soils do not respond quickly to the climate changes, the depth of active zone is greater than the depth of seasonal moisture fluctuations. The buildings in Black cotton soil have posed serious problem of distortion and cracking throughout the world because of unlimited quantity of water being readily available to the foundation soil.

2.5.2 DAMAGES TO THE PAVEMENT SUB GRADES

Majority of the pavement failures could be attributed to the poor sub grade conditions and Black cotton soils one such problematic situation (Evans and McManus, 1999). Roads running through Black cotton soil regions are subjected to severe unevenness with or without cracking, longitudinal cracking parallel to pavement centre line, rutting of pavement surface and localized failure of pavement associated with disintegration of the surface. The extensive damage to highways running over expansive and high compressible soil sub-grades (plate 2.5) is estimated to be in billions of dollars all over the world. Even railway tracks are no exception and are affected by appreciable movements due to the nature of high compressibility of the Black cotton soils.

(a) RUTTING:

The rutting is mainly due to consolidation of one or more layers of pavement and also due to repeated application of the 1oad along the same wheel path resulting in deformation of pavements. Depending upon the width and depth of ruts it can be found out whether the deformations are in sub grade or subsequent layers of the pavements.

Fig 2.2 shows rutting

(b) LONGITUDINAL CRACKS:

This is due to differential volume changes that occur in Black cotton soils. The deformation characteristics of the Black cotton soils results in cracking through the fu11 pavement thickness.The visual which is represented below is an example for the pavements cracks which are developed longitudinally.

Fig 2.3 shows longitudinal cracks

2.6 REMEDIAL MEASURES TO OVERCOME PROBLEMS

If soil has a high deformation, the preventive measures are required. These measures can be broadly classified into the following categories: . Avoiding highly compressible soils r Alterations to these soils In case of foundations, Sand Cushion method, Stiffening the foundation by adopting Alterations, Mat Foundations, Heat treatment, Chemical stabilization, soil replacement technique are some of the remedial measures to overcome the problems of compressibleBlack cotton soils. In case of Pavement sub grades, stabilization techniques can be adopted using various industrial waste considering the economy and also chemical additives for easy mixing and early results. The reinforcement techniques also plays vital role in improving the load carrying capacity of the Black cotton soil beds.

a) SOIL REPLACEMENT:

It consists of replacing the weak Black cotton soil by using the rich soils available within the vicinity. So that thebearing capacity of the foundation bed or sub grade of the flexible pavement can be improved and also the deformations can be controlled up to some extent.

Chen (1988) claimed that the depth of soil replacement should be exercised to prevent entry of surface drainage from reaching the underlying expansive soil. This method becomes uneconomical if expansive soil or soft soil extends to a great depth (Nelson, 1991).

b) SAND CUSHION METHOD:

In this method, the entire depth of the Black cotton soil stratum or a part thereof is removed and replaced with a sand cushion, compacted to the desired density and thickness. The deformation varies inversely as the thickness of the sand layer and directly as the density of the sand,. Provision of sand cushion is probably based on the assumption that it would

absorb upward and lateral deformations. The sand cushion method thus bristles with severe limitations particularly when it is adopted in deep strata. Foundation engineers often suggest some arbitrary thickness for sand cushion. (Bart facilities standards, standard specification, 2008) .

c) STIFFENING THE FOUNDATION AND SUPER STRUCTURE:

Provision of RCC bands in the foundation, plinth and lintel levels is also suggested as cracks control measures in buildings. But this practice has not produced the desired and anticipated results. Even heavy reinforcement at the foundation level will not prevent cracking due to doming pattern of heaving (Agarwala and Khanna, 1969; winnfred , l969).

d) MAT FOUNDATION:

Mat foundation receives and transmits the entire structural load to the under slab soil. These foundations may be economical on long term basis, but involves high initial cost and would be a costly proposition in developing countries like India. Lytton and Woodburn (1973) and Chen (1983) reported that the condition of buildings built using stiffened, slab system is satisfactory. However, Zertlen (1969) claimed that mat foundation is worth considering for small and simple structures or for separated units of less than 3m x 6m, otherwise it would be expensive to contain differential movements.

E) WICK DRAINS:

Geo-composites formed of hallow cored, Geo-textile wrapped drainage element (geo-net) inserted vertically into soft ground to speed up the consolidation process. Band drains are typically used in constructing embankments over compressible and water saturated soils to improve stability and accelerate settlement. These soils have a weak porous structure, usually filled with water (pore water). When such soils are loaded by a superimposed embankment or structure the water is squeezed out. However, because of the impermeable nature of some soils, this could take time, hence causing instability and long term settlement problems for any structure built on top. Band, Drains are installed vertically from the working plate form deep into the ground and act as wicks providing a route for the water to drain out quickly either to the surface or a more permeable stratum at depth. This process speeds up consolidation of the soil and minimizes settlement of the superimposed embankment or structure.

.

f) HEAT TREATMENT:

Russians have developed thermal stabilization technique to stabilize the soft clays. This technique consists of blowing preheated air under pressure through boreholes. The plasticity of soil decreases as temperature increases until 5000c and soil become non-plastic, but the effective depth of burning with mobile furnace is hardly 2-5 inches and consequently the technique is uneconomical and not possible in case of Black cotton soil because the moisture content increases with depth of soil strata.

CHAPTER-3

METHODOLOGY

3.1. ESSENTIAL OF STABILIZATION

COURSE N0-2

Soil stabilization is artificiary changing soil properties for construction purposes (by physical or chemical methods) at the natural site- As a result of soil stabilization, the bearing capacity of the foundation of the structure is increased and its strength, water tightness, resistance to washout, and other properties are improved. Soil stabilization is achieved by injecting cementing materials or chemical solutions into the ground and also by applying electric currents to the ground or heating or cooling it.

3.2 .METHOD OF STABILIZATION

The basic methods of stabilization are

a) Cement stabilization
b) Bituminous stabilization
c) Lime stabilization
d) Mechanical stabilization
e) Electrical stabilization
f) Thermal stabilization
g) Chemical stabilization

3.2.1. CEMENT STABTLIZATION:

The principal materials used for the cementitious stabilization and modification of highway pavement materials are cacl2 , Terrazyme and port- land cement.soils can be stabilized with port-land cement, provided sufficient quantity is added.some soils with a high organic content do not react welr with cement and hardening may be delayed. As clay content increases, soils become more difficult to pulverize and work, and larger quantities of cement must be added to harden them.

Fig 3.1 Cement Stabilization

3.2.2. BITUMINOUS STABILIZATION:

Bituminous soil stabilization refers to a process by which a controlled amount of bituminous material is thoroughly mixed with an existing soil or aggregate material to form a stable base or wearing surface. Bitumen increases the cohesion and load-bearing capacity of the soil and renders it resistant to the action of water. The recommended soil gradation for sub grade and renders it resistant to the action water.

3.2 Bituminious stabilization

3.2.3 LIME STAAILIZATION:

Lime reacts with medium, moderately fine and fine grained soils to produce decreased plasticity, increased workability, reduced swelling, and increased strength stabilization of soils wraith hydrated lime is applicable to far heavier clayey soils and is less suitable for granular materials and second it is used more widely as a construction expedient that is to prepare a soil for further treatment or to render a sufficient improvement to support construction traffic. In roads rime stabilization is Widely used.

Fig 3.3 lime stabilization

3.2.4 MECHANICAL STABILIZATION:

This is the process of altering soil properties by changing the gradation through mixing with other soils, densifying the soils using compaction efforts, or undercutting the existing soils and replacing them with granular material. In applying these techniques, it is necessary to ensure the properties of stabilized Geo materials and their mixtures as applicable for use in the design of foundations

Fig 3.4 Mechanical stabilization

3.2.5. THERMAL STABILIZATION

Thermal stabilization is used to strengthen sagging loess soils. In this method the soil to be stabilized is sintered by gaseous products of fuel combustion, having a temperature of Taa, to 1000"c. Combustion is most effective if conducted within the stratum of the soil to be stabilized. Stabilization of unstable water-bearing soils can be achieved by artificially freezing the soi1. It generally is costly and is restricted to conditions for which other methods are not suitable.

3.2.6. CHEMICAL STABILIZATION:

The transformation of soil index properties such as cement, Terrazyme, lime, or a combination the physical and chemical properties of the by adding chemicals of these, often alters soil including the cementation of the soil particles. It also includes deep mixing and grouting' Chemical stabilization can aid in dust control on roads and highways, particularly unpaved roads, in water erosion control, and in fixation and leaching control of waste and recycled materials.

Fig 3.5 shows chemical stabilization

CHAPTER-4

EXPERIMENTAL MATERIALS

COURSE NO-3

An experiment investigation was under taken to study the particle size analysis. Specific gravity, liquid limit, compaction for soil and the tests such as unconfined compression test, California bearing ratio test were conducted for soil stabilized with different percentages

4.1 MATERIALS USED

SOIL: The soil was used which can be excavated from the Kalparu, highway construction site

After collection of soil sample we have done the grain size analysis so from results it is black cotton soil

PHOSPHOGYPSUM :

It is an industrial waste generated during the production of phosphoric acid. Phosphogypsum is collected from agriculture committee market yard, Kakinada

Fig 4.2 shows phosphogypsum

1) The solidification of phosphogypsum in to granules was aimed at improving geotechnical properties and reducing the leaching of heavy metals.

2) This by-product is contaminated by various impurities, both chemical and radioactive, and is usually stockpiled within special areas.

3) Atterberg's limits, standard proctor compaction and unconfined compressive strength tests were carried out for stabilizing the soil sample.

4) By adding phosphogypsum in different proportions to the soil sample swelling content can be reduced to some range.

Terrazyme:

1) it is a non-toxic, non-flammable and non-corrosive material which is formulated from vegetable extracts, it is a brown in coloured slimy substance which has odour of molasses which makes it easy to work with its non-toxic nature makes it accessible and workable.

2) This quality of terrazyme will make it versatile. the treated soil becomes water resistant and it can also resist deformation. it can be added to soil at a proportion of 0.2%-0.3% as per required quantities.

Terrazyme

3) In clay water mixture positively charged ions (cat-ions) are present around the clay particles, creating a film of water around the clay particle that remains attached or adsorbedon the clay surface.

4) The adsorbed water or double layer gives clay particles their plasticity. Terrazyme replaces adsorbed water with organic cations, thus neutralizing the negative charge on a clay particle.

5) The organic cations also reduce the thickness of the electrical double layer. This allows Terrazyme treated soils to be compacted more tightlytogether.

6) Terrazyme resists being replaced by water, thus reducing the tendency of some clay to swell. Terrazyme promotes the development of cementitious compounds using the following, general reaction:

CHAPTER-5

EXPERIMENTAL INVESTIGATION

5.1. Grain size analysis

COURSE N0-4

Aim:

To determine the particle size distribution by sieving (Grain size analysis)and to determine the fineness modulus, effective size and uniformity coefficient.

This test is performed to determine the percentage of different grain sizes contained within a soil. The mechanical or sieve analysis is performed to determine the distribution of the coarser, larger-sized particles. The distribution of different grain sizes affects the engineering properties of soil. Grain size analysis provides the grain size distribution, and it is required in classifying the soil.

Specifications:

This test is specified in IS: 2720 (Part 4) – 1985 – Method of test for soil (Part 4-Grain size analysis).

Equipments Required:

That is,μ and 75μ, 150μ, 300μa) Sieves of sizes: 4.75 mm, 2.0 mm, 1.0 mm, 600 I.S 460-1962 is used. The sieves for soil tests: 4.75 mm to 75 microns. b) Thermostatically controlled oven. c) Trays, sieve brushes, mortar with a rubber covered pestle, etc. d) Mechanical sieve shaker etc.

Theory:

The grain size analysis is widely used in classification of soils. The data obtained from grain size distribution curves is used in the design of filters for earth dams and to determine suitability of soil for road construction, air field etc. Information obtained from grain size analysis can be used to predict soil water movement although permeability tests are generally used. The method is applicable to dry soil passing through 4.75 mm size sieve less than 10 % passing through 75-micron sieve

Percentage retained on any sieve = (weight of soil retained / total weight) x100

Cumulative percentage retained = sum of percentages retained sieve on all coarser sieves
Percentage finer than any sieve = 100 percent minus cumulative Size, N percentage retained.

Procedures:

a) Take a representative sample of soil received from the field and dry it in the oven
b) Use a known mass of dried soil with all the grains properly separated out. The maximum mass of soil taken for analysis may not exceed 500 g.
c) Prepare a stack of sieves. Set the sieves one over the other with an ascending order (sieves having larger opening sizes i.e., lower numbers are placed above the one with smaller opening sizes i.e., smaller numbers).The very last sieve to collect theμ sieve). A pan is attached to the lowest 75 μ#200 (75 portions passing #200 sieve and fit the nest to a mechanical shaker.
d) Make sure sieves are clean. If many soil particles are stuck in the openings try to poke them out using brush.
e) The whole nest of sieves is given a horizontal shaking for 10 min in sieve shaker till the soil retained on each reaches a constant value.
f) Determine mass of soil retained on each sieve including that collected in the pan below.

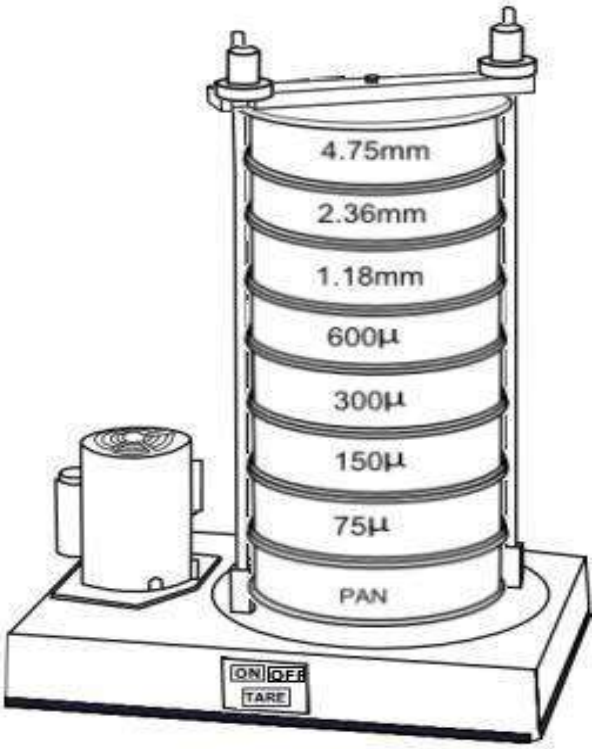

Fig 5.1: Set of fine sieves

Table 5.1: classification of soil

Gravel	Sand			Silt	Clay
	Coarse	Medium	Fine		
Grain size range in mm > 4.75	4.75-2.00	2.00-0.425	0.425-0.075	0.075-0.002	<0.002

Observations and calculations:

Table5.2: Grain Size Analysis

S.No	IS Sieve Size	Particle size D(mm)	Weight retained(g)	%weight retained	Cumulative %Weight retained	Cumulative %finer(% passing)

5.2. Specific Gravity

Aim:

To determine the specific gravity of soil solids by Pycnometer bottle method.

Specific gravity is the ratio of the mass of unit volume of soil at a stated temperature to the mass of the same volume of gas-free distilled water at a stated temperature.

Specification:

This test is specified in IS: 2720 (Part 4) – 1985. A soil's specific gravity largely depends on the density of the minerals making up the individual soil particles. However, as a general guide, some typical values for specific soil types are as follows:

- The specific gravity of the solid substance of most inorganic soils varies between 2.60 and 2.80.
- Tropical iron-rich laterite, as well as some lateritic soils, usually have a specific gravity of between 2.75 and 3.0 but could be higher. Sand particles composed of quartz have a specific gravity ranging from 2.65 to 2.67. • Inorganic clays generally range from 2.70 to 2.80.
- Soils with large amounts of organic matter or porous particles (such as diatomaceous earth) have specific gravities below 2.60. Some range as low as 2.00.

Equipments Required:

a) Pycnometer of about 1 liter capacity
b) Balance accurate to 1 g, glass rod, de-aired distilled water etc.

Theory:

Specific gravity of soil solids is defined as the weight of soil solids to weight of equal volume of water. In effect, it tells how much heavier (or lighter) the material is than water. This test method covers the determination of the specific gravity of soil solids that pass 4.75 mm sieve.

Equation for specific gravity,

$$G = (W2-W1)/((W2-W1)-(W3-W4))$$

Where, W1 = weight of Pycnometer in grams.
W2 =weight of Pycnometer + dry soil in grams.
W3=weight of Pycnometer + soil+ water grams
W4=weight of Pycnometer + water grams.

Precautions:

- Soil grains whose specific gravity is to be determined should be completely dry.
- If on drying soil lumps are formed, they should be broken to its original size.
- Inaccuracies in weighing and failure to completely eliminate the entrapped air are the main sources of error. Both should be avoided.
- While cleaning the glass jar, please be careful as there may be glass grains projecting out and it may tear the skin.
- Make sure, you handle the glass jar and conical cap without falling on your legs or floor. Hence, handle the equipment with care.

Procedure:

a) Clean and dry the pycnometer and weigh it along with the conical cap (W1 in gm).

b) Select about 300 gm of dry soil free of clods and put the same into the pycnometre. Weigh it (W2 in g) with cap and washer.

c) Fill the pycnometer with de-aired water up-to half its height and stir the mix with a glass rod. Add more water and stir it. Fit the screw cap and fill the pycnometer flush with the hole in the conical cap and take the weight (W3 in g).

d) Remove all the contents from the pycnometer, clean it thoroughly and fill it with distilled water. Weigh it (W4 in g). e) Now use the above equation for determining G.

e) Repeat the same process for additional tests.

Table 5.3.shows specific gravity values

S. No	Particulars	Test No 1 (G1)	Test No 2 (G2)	Test No 3 (G3)
1	Weight of Pycnometer bottle , g1(W)			
2	Weight of Pycnometer + dry ,g2soil (W)			
3	Weight of Pycnometer + soil + water, (W3), g			
4	Weight of Pycnomerter + water (W4), g			
5	Calculation of specific gravity, G			

5.3 ATTERBERG'S LIMIT

A) LIQUID LIMIT

Aim:

To determine the liquid limit of fine soil by using Casagrande Apparatus When water is added to dry soil, it changes its state of consistency from hard to soft. We can define liquid limit as the minimum water content at which the soil is still in the liquid state, but has a small shearing strength against flow. From test point of view we can define liquid limit as the minimum water content at which a part of soil cut by a groove of standard dimension will flow together for a distance of 12 mm (1/2 inch) under an impact of 25 blows in the device.

Specifications:

This test is done to determine liquid limit of soil as per IS: 2720(Part 5)-1985. After receiving the soil sample it is dried in air or in oven (maintained at a temperature of 600C). If clods are there in soil sample then it is broken with the help of wooden mallet. The soil passing 425 micron sieve is used in this test.

Equipments Required:

a) A mechanical liquid limit apparatus (casagrande type) with grooving tools.
b) Evaporating dishes, wash bottle etc.
c) Balance accurate to 0.01 g.
d) Airtight container to determine water content. C.°C to 110 °
e) Oven to maintain temperature at 105
f) Sieve (425 micron).
g) Spatula
h) Desiccators and other accessories.

Theory:

Consistency of fine-grained soils may be defined as the relative ease with which a soil can be remoulded. Consistency limits may be categorized into three limits called Atterberg limits.

They are 1) Liquid limit

2) Plastic limit and

3) Shrinkage limit Liquid limit is the moisture content that defines where the soil changes from a plastic to a viscous fluid state. Other limits will be discussed during corresponding experiment.

Precautions:

- Soil used for liquid limit determination should not be oven dried prior to testing.
- In LL test the groove should be closed by the flow of soil and not by slippage between the soil and the cup
- After mixing the water to the soil sample , sufficient time should be given to permeate the water throughout out the soil mass
- Wet soil taken in the container for moisture content determination should not be left open in the air, the container with soil sample should either be placed in desiccators or immediately be weighed.
- After performing each test the cup and grooving tool must be cleaned.
- The number of blows should be just enough to close the groove.
- The number of blows should be between 10 and 40.

Procedure:

a) A representative sample of mass of about 120 gm passing through 425 sieve is taken for the test. Mix the soil in an evaporating dish with distilled water to form a uniform paste.

b) Adjust the cup of the device so that the fall of the cup on to the hard rubber base is 10 mm.

c) Transfer the portion of the paste to the cup of liquid limit device. Allow some time for the soil to have uniform distribution of water.

d) Level the soil topsoil so that the maximum depth of soil is 12 mm. A channel of 11 mm wide at the top, 2 mm at the bottom and 8 mm deep is cut by the grooving tool. The grooving tool is held normal to the cup and the groove is cut through the sample along the symmetrical axis of the top.

e) The handle of the device is turned at a rate of about 2 revolutions per second and the number of blows necessary to close the groove along the bottom distance of 12 mm is counted. A sample of soil which closes the groove is collected

f) The soil in the cup is re-mixed thoroughly (adding some more soil if required) some quantity of water which changes the consistency of soil, repeat the process. At least 4 tests should be conducted by adjusting the water contents of the soil in the cup in such a way that the number of blows required to close the groove may fall within the range of 5 to 40 blows. A plot of water content against the log of blows is made as shown in figure. The water content at 25 blows gives the liquid limit.

Fig 5.2 liquid limit apparatus

Table 5.4: Number of blows vs water content

Trial No	1 (w1)	2 (w2)	3 (w3)	4 (w4)
No of blows (N)				
Weight of Container (W1)				
Weight of Container + Wet soil (W2)				
Weight of Container + dry soil (W3)				
Water content w=(W2-W3)/(W3-W1)				

PLASTIC LIMIT

Aim:

To determine plastic limit of the soil.

The plastic limit of fine-grained soil is the water content of the soil below which it ceases to be plastic. It begins to crumble when rolled into threads of 3mm dia.

Specifications:

This test is done to determine the plastic limit of soil as per IS: 2720 (Part 5) – 1985. Take out 30g of air-dried soil from a thoroughly mixed sample of the soil passing through 425µm IS Sieve. Mix the soil with distilled water in an evaporating dish and leave the soil mass for 24hrs.

Equipments Required:

a) Porcelain evaporating dish.

b) Flat glass plate.

c) Balance accurate to 0.01 g.

d) Drying oven, maintained at 110 ± 5°C (230 ± 9°F).

e) Weighing dishes, non-absorbent, with lids.

f) Flexible spatula, blade approximately 102 mm (4 in.) long × 19 mm (0.75 in.) wide.

Theory:

The plastic limit is the moisture content that defines where the soil changes from a semi-solid to a plastic state. It may also be defined as that water content at which soil starts crumbling when rolled into threads of 3mm diameter. Use the paste from liquid limit test and begin drying. May add dry soil or spread on plate and air dry.

Precautions:

1. Soil used for plastic limit determination should not be oven dried prior to testing.
2. After mixing the water to the soil sample, sufficient time should be given to permeate the water throughout out the soil mass
3. Wet soil taken in the container for moisture content determination should not be left open. The container with soil sample should either be placed in desiccators or immediately be weighed.

Procedure:

a) Select a representative sample of fine-grained soil of about 20 g or more passing IS sieve. Mix it with distilled water thoroughly on a glass plate suchμthrough 420 that the palm of the soil can be rolled into a thread of 3 mm diameter. Allow some time for the proper distribution mixed with water.

b) Take about 10 g of this wet sail and roll it into a thread on a glass plate with the palm of the hand. The rolling must be such that it forms a uniform thread of 3 mm diameter. If the thread cracks before attaining 3 mm diameter, and add little more water, knead it and roll again. If the rolling can be done to diameter less than 3 mm, mix some dry soil, knead it to remove same extra moisture in the soil. This process has to continue till the sample crumbles just at about 3 mm diameter. Collect the crumbled soil (at least 6 g) and measure its water content.

c) Repeat the process to get at least three water content determination (after they have been in the oven at least 16 hours).

d) The average of water content so obtained is the plastic limit of the soil.

Table 5.5: Water content of 3 mm soil

Trail No	1 (w1)	2 (w2)	3 (w3)	4 (w4)
Weight of Container (W1), g				
Weight of Container +Wet soil (W2), g				
Weight of Container +dry soil (W3), g				
Water content w=(W2-W3)/(W3-W1), g				

The Plastic limit of soil (average water content) is_____

Plasticity index = Wp – Wl

5.4 COMPACTION TEST

Aim:

To determine moisture content –DRY DENSITY RELATIONSHIP BY STANDARD PROCTOR TEST.

Compaction is the application of mechanical energy to a soil so as to rearrange its particles and reduce the void ratio. It is applied to improve the properties of an existing soil or in the process of placing fill such as in the construction of embankments, road bases, runways, earth dams, and reinforced earth walls. Compaction is also used to prepare a level surface during construction of buildings. There is usually no change in the water content and in the size of the individual soil particles.

Specifications:

The experiment is conducted as per IS 2720-7(1980).

Equipment Required:

a) Typical equipment for proctor test

b) Other accessories are: Balance, oven, straight edge, sieves, metal hammer, etc.

Theory:

The objectives of compaction are:

a) To increase soil shear strength and therefore it's bearing capacity.

b) To reduce subsequent settlement under working loads.

c) To reduce soil permeability making it more difficult for water to flow through

To assess the degree of compaction, it is necessary to use the dry unit weight, which is an indicator of compactness of solid soil particles in a given volume. The laboratory testing is meant to establish the maximum dry density that can be attained for a given soil with a standard amount of compactive effort.

1. Bulk density, $\rho t = (M2-M1)/V$
2. Dry density, $\rho d = \rho t/(1 + w)$
3. Dry density, ρd for zero air voids line.

$$\rho d = GPw/(1 + (wG/S))$$

Where, M1 = mass of mould used for proctor test

M2 = mass of mould + compacted soil

M = mass of wet soil.

V = volume of mould.

ρw = density of water.

G = Specific gravity of soils.

W = water content.

S = degree of saturation.

Precautions:

1. Thoroughly breakup the sample by running it through the screen before compacting it in the mould.
2. Pound within a moisture range from optimum to 4 percent below optimum. The closer to optimum the moisture content is, the more accurate the test will be.
3. Make sure the clamp on each mold section is tight.
4. Make sure the wing nuts on the base plate are secured with equal tension.
5. Place the mould on a solid block that is supported on firm soil or pavement.
6. Hold the rammer vertically so that it will fall freely.
7. Drop the 25 kg rammer weight freely.
8. Use exactly 25 blows on each layer.
9. Place 3 equal layers in the mold.

Procedure:

1. Select a representative soil sample of about 25 kg. The material used for the test must be finer than 20 mm sieve. Air-dry sample.
2. Add sufficient water to the sample (about 7 % for sandy soils and 10 % for clay soils), which will be less than the estimated optimum moisture content. Mix the soil thoroughly and keep this in an airtight container for a period of 20 hours.
3. Fix the mould to the base plate after cleaning its inside surface. Find the mss of the mould with the base plate (M1).
4. Attach the extension collar to the mould.

5. Take about 2.5 kg of soil in an air tight container and compact it in the mould in three equal layers each layer is compacted by giving 25 blows by the hammer weighing 2.6 kg and dropping from a height of 310 mm. The compaction must be uniform over the whole area, and a spatula scratches each layer before adding another layer. The filling must be such that the last layer projects into the collar by about 5 mm. After the completion of compaction, remove the collar and remove the excess soil with the help of a straight edge. Find the mass of the mould with the base plate and the soil (M2). Remove the soil from the mould by making use of an ejector and take a representative sample for water content determination.

Fig 5.3: shows compaction apparatus

Observations and tabulation:

The following observations were made on the compaction of a soil by standard proctor test. Six tests were carried out on the selected samples of soil by varying the water content. Water contents of samples of each test were found out by the procedure explained earlier.

The test results are tabulated below.

Table5.6 shows values of OMC and DRY DENSITY

Test No.	1	2	3	4	5	6
Mass of empty mould M1 gm Volume of mould, cm3 Mass of mould + sample,M2,gm Mass of wet soil, M,gm Wet density, ρt g/cm Water content, w% Dry density,ρd, gm/cm3 W1 for calculation of saturation line % ρd, gm/cm3for S=100% ρd , gm/cm3 for S=80%						

5.5. SWELLING INDEX

STANDARD:

IS:2720 (Part 40) 1977.

DEFINITION:

Free Swell Index is the increase in volume of a soil, without any external constraints, on submergence in water.

APPARATUS :

- 425 micron IS sieve.
- Graduated glass cylinders 100 ml capacity 2Nos (IS: 878 -1956).
- Glass rod for stirring.
- Balance of capacity 500grams and sensitivity 0.01 gram.

PROCEDURE:

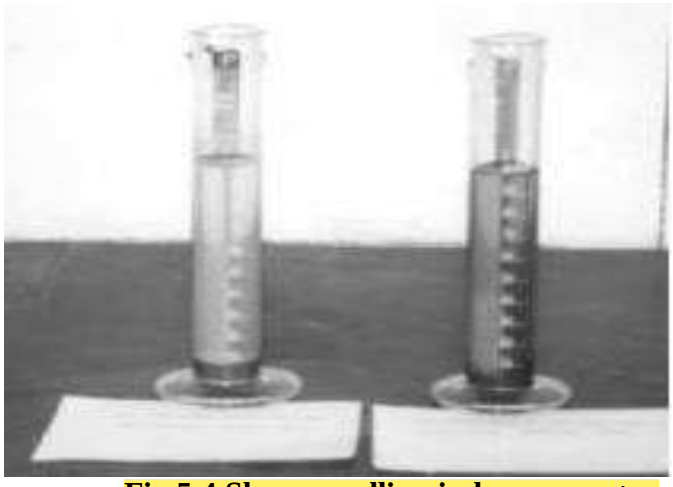

Fig 5.4 Shows swelling index apparatus

1. Take two representative oven dried soil samples each of 10 grams passing through 425 micron sieve.
2. Pour each soil sample in to each of the two glass graduated cylinders of 100ml capacity.
3. Fill one cylinder with kerosene and the other with the distilled water up to the100ml mark.

4. Remove the entrapped air in the cylinder by gentle shaking and stirring with a glass rod.
5. Allow the samples to settle in both the cylinders.
6. Sufficient time, not less than 24 hours shall be allowed for soil sample to attain equilibrium state of volume without any further change in the volume of the soils.
7. Record the final volume of the soils in each of the cylinders.

CALCULATIONS:

$$\text{Free Swell Index, (\%)} = \frac{V_d - V_k}{V_k} \times 100$$

V_d = Volume of the soil specimen read from the graduated cylinder containing distilled water.

V_k = Volume of the soil specimen read from the graduated cylinder containing Kerosene

Determination No.	Measuring Cylinder No.		Reading After 24 hours		Free Swell Index, %
	Kerosene	Distilled Water	Kerosene	Distilled Water	

CHAPTER-6

RESULTS AND DISCUSSIONS

6.1 Grain size analysis

COURSE N0-5

Table 6.1: Grain size analysis of soil sample

S.No	IS Sieve Size	Particle size D(mm)	Weight retained(g)	%weight retained	Cumulative %Weight retained	Cumulative %finer(% passing)
1	4.75mm	4.75	286	28.6	28.6	71.4
2	2.00mm	2.00	188	18.8	47.4	52.6
3	1.00mm	1.00	156	15.6	63	37
4	600	0.600	82	8.2	71.2	28.8
5	425	0.425	96	9.6	80.8	19.2
6	212	0.212	156	15.6	96.4	3.6
7	150	0.150	22	2.2	98.6	1.4
8	75	0.075	10	1	99.6	0.4
9	Pan	<0.075	5	0.5	100.1	0.1

Fig 6.1 Showing graph for grain size analysis of soil sample

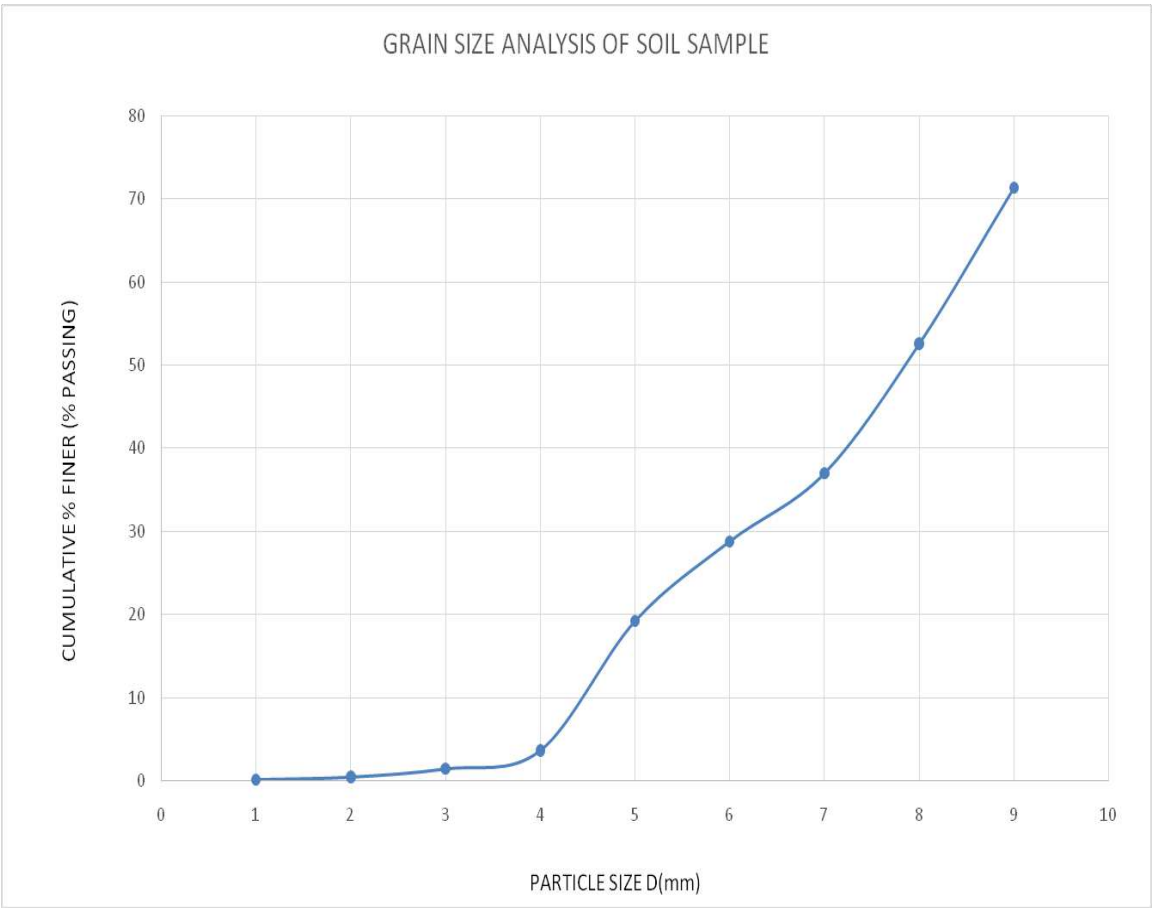

Fineness modulus= total cumulative % of weight retained

100

Fineness modulus= 685.7

100

The fineness modulus of soil sample is 6.85

Table 6.2: Grain size analysis of soil sample and phosphogypsum

S.No	IS Sieve Size	Particle size D(mm)	Weight retained(g)	%weight retained	Cumulative %Weight retained	Cumulative %finer(% passing)
1	4.75mm	4.75	144	12	12	88
2	2.00mm	2.00	198	16.5	28.5	71.5
3	1.00mm	1.00	100	8.33	36.83	63.17
4	600	0.600	76	6.33	43.16	56.84
5	425	0.425	142	11.8	54.96	45.04
6	212	0.212	404	33.66	88.62	11.38
7	150	0.150	34	2.83	91.45	8.55
8	75	0.075	60	5	96.45	3.55
9	Pan	<0.075	14	1.16	97.61	2.39

Fig 6.2 Shows graph for grain size analysis for soil sample and phosphogypsum

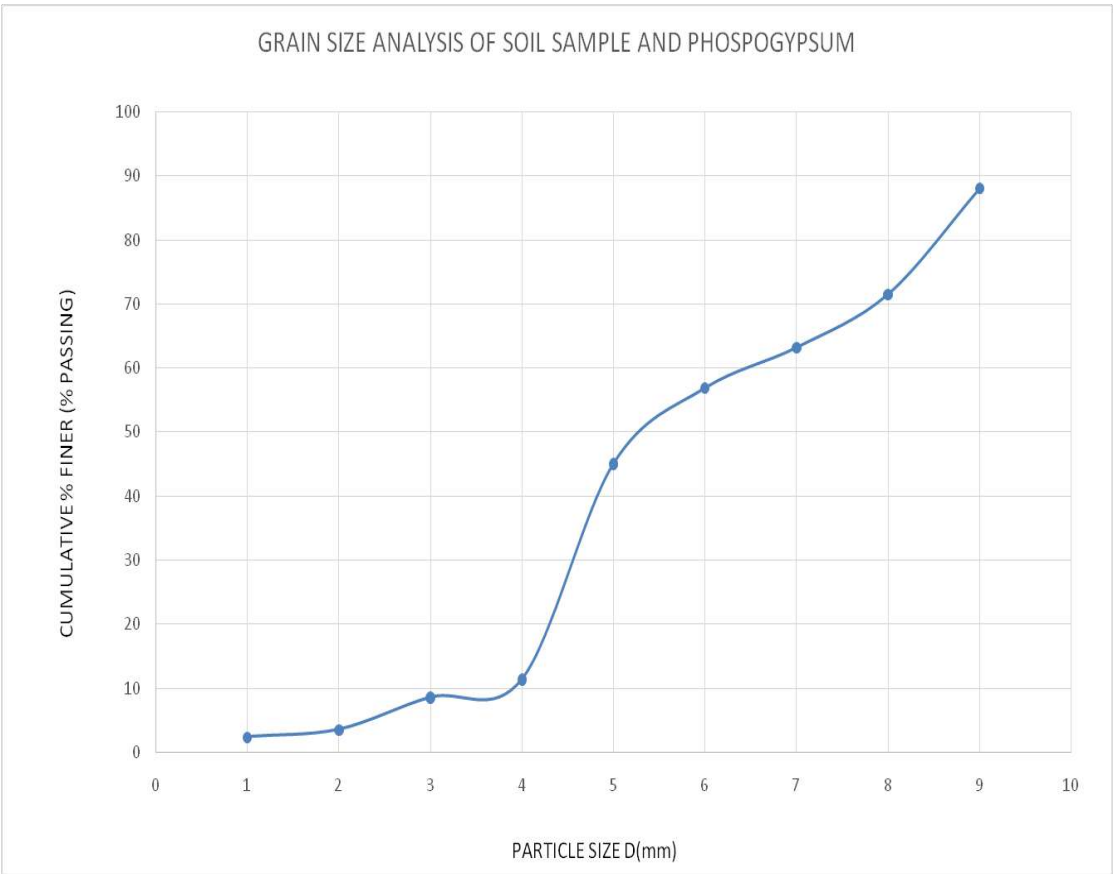

Fineness modulus= $\frac{\text{total cumulative \% of weight retained}}{100}$

Fineness modulus= 549.58/100

The fineness modulus of soil sample is 5.49

Table 6.3: Grain size analysis of soil sample and terrazyme

S.No	IS Sieve Size	Particle size D(mm)	Weight retained(g)	%weight retained	Cumulative %Weight retained	Cumulative %finer(% passing)
1	4.75mm	4.75	144	12	12	88
2	2.00mm	2.00	198	16.5	28.5	71.5
3	1.00mm	1.00	100	8.33	36.83	63.17
4	600	0.600	76	6.33	43.16	56.84
5	425	0.425	142	11.8	54.96	45.04
6	212	0.212	404	33.66	88.62	11.38
7	150	0.150	34	2.83	91.45	8.55
8	75	0.075	60	5	96.45	3.55
9	Pan	<0.075	14	1.16	97.61	2.39

Fig 6.3 Shows graph for grain size analysis of soil sample and Terrazyme

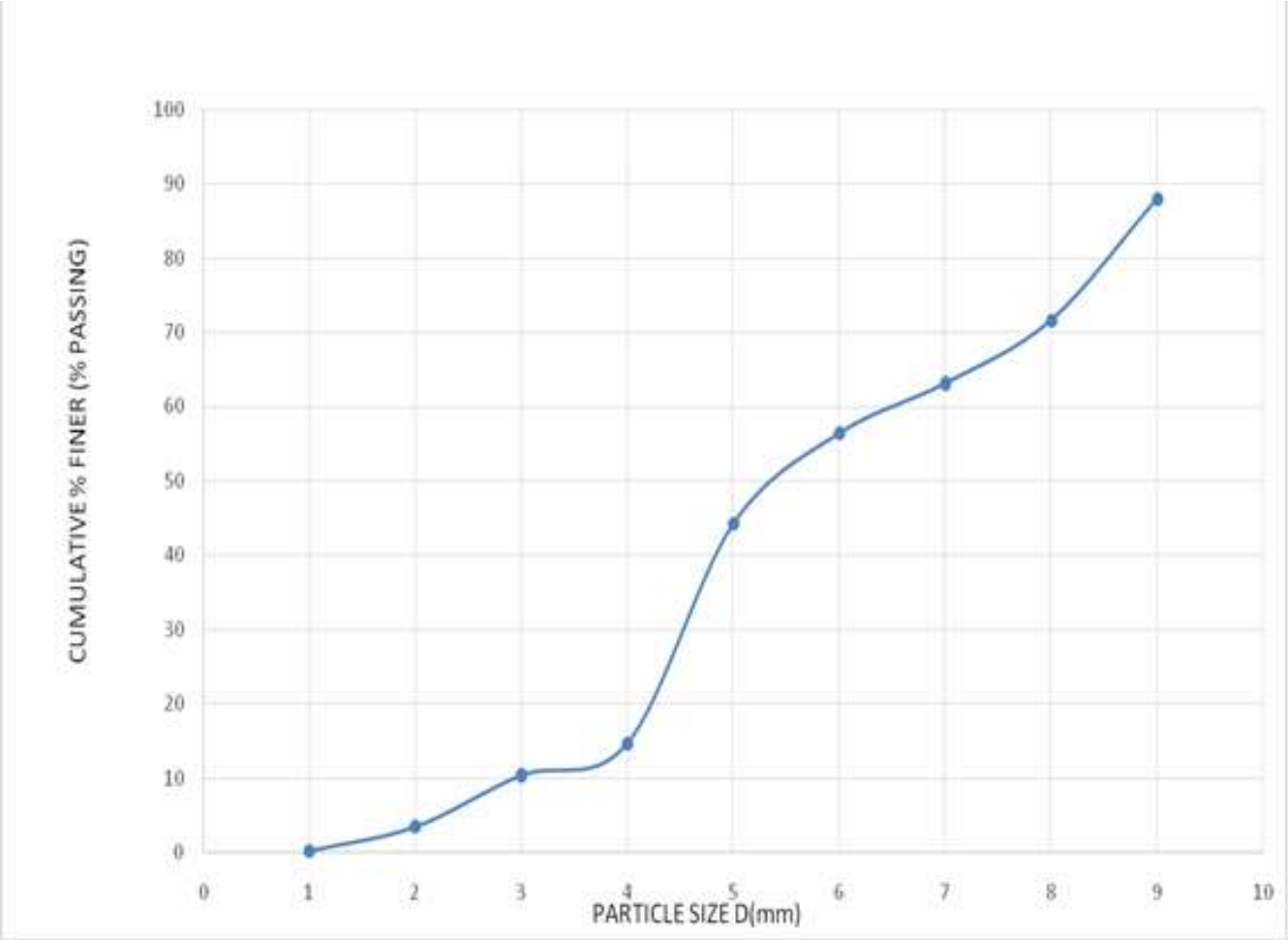

Fineness modulus= total cumulative % of weight retained
100

Fineness modulus= 549.58/100

The fineness modulus of soil sample is 5.49

6.2 Specific Gravity

Observations and Calculations for specific Gravity of Soil Sample

Table 6.4: Showing the values of specific gravity of soil sample with phosphogypsum

S. No	Particulars	Test No 1 (G1)
1	Weight of Pycnometer bottle , g(W1)	406
2	Weight of Pycnometer + dry ,soil (W2)	874
3	Weight of Pycnometer + soil + water, (W3), g	1573
4	Weight of Pycnomerter + water (W4), g	1243
5	Calculation of specific gravity, G	1.6

Table 6.5: Showing the values of specific gravity of soil sample with terrazyme

S. No	Particulars	Test No 1 (G1)
1	Weight of Pycnometer bottle , g(W1)	405
2	Weight of Pycnometer + dry ,soil (W2)	924
3	Weight of Pycnometer + soil + water, (W3), g	1592
4	Weight of Pycnomerter + water (W4), g	1243
5	Calculation of specific gravity, G	1.3

6.3. Atterberg's limit

6.3.1. Liquid limit

Observations and Calculations for liquid limit of Soil Sample

Table 6.6: Showing the values of liquid limit of soil sample and phosphogypsum

Trial No	Values
No of blows (N)	44
Weight of Container (W1)	16
Weight of Container + Wet soil (W2)	30
Weight of Container + dry soil (W3)	28
Water content w=(W2-W3)/(W3-W1)x100	16.6%

Table 6.7: Showing the values of liquid limit of soil sample and Terrazyme

Trial No	Values
No of blows (N)	44
Weight of Container (W1)	16
Weight of Container + Wet soil (W2)	33
Weight of Container + dry soil (W3)	31
Water content w=(W2-W3)/(W3-W1)x100	13.8%

6.3.2. Plastic limit

Observations and Calculations for plastic limit of Soil Sample

Table 6.8: Showing the values of plastic limit of soil sample and phosphogypsum

Trail No	Values
Weight of Container (W1), g	**30**
Weight of Container +Wet soil (W2), g	**60**
Weight of Container +dry soil (W3), g	**50**
Water content w=(W2-W3)/(W3-W1), g	**25%**

Table 6.9: Showing the values of plastic limit of soil sample and terrazyme

Trail No	Values
Weight of Container (W1), g	**30**
Weight of Container +Wet soil (W2), g	**64**
Weight of Container +dry soil (W3), g	**56**
Water content w=(W2-W3)/(W3-W1), g	**30.7%**

6.4. Compaction

Table:6.10 showing values after adding phosphogypssum

Amount of water added	4%	6%	8%	10%	12%
Weight of mould(W1)	2306	2306	2306	2306	2306
Compacted weight + mould (W2)	4710	4726	4710	4684	4662
Weight of wet soil(W2+W1)	2404	2420	2404	2378	2356
Volume of mould(V),cm3	1000	1000	1000	1000	1000
Bulk density=(W2-W1)/V, g/cc	2.404	2.42	2.404	2.378	2.356
Weight of container with lid(M1)	18	18	18	18	18
Weight of lid + wet soil(M2)	32	34	46	38	44
Weight of lid + dry soil(M3)	30	32	42	36	40
Water content (w)=(M2-M3)/(M3-M1)	16.66	14.28	16.66	11.11	18.18
Dry density, g/cc=e/(1+w)	2.06	2.11	2.06	2.14	1.99

Fig 6.4 Shows graph for compaction after adding phosphogypsum

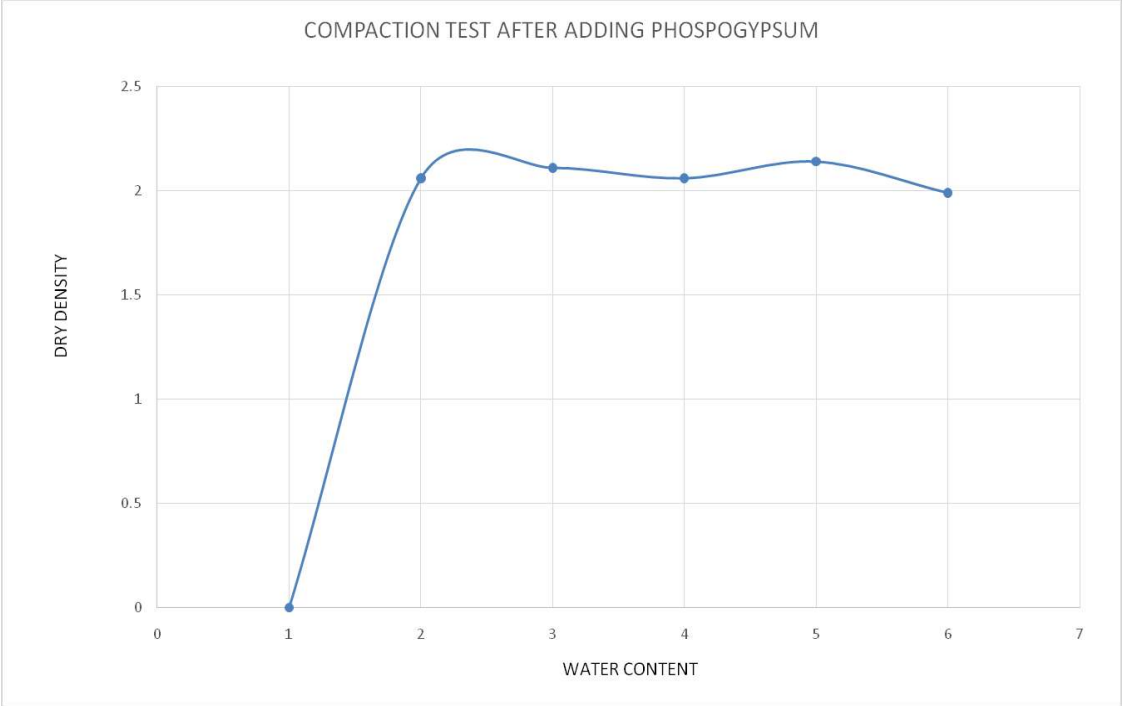

The results we observed are:

Optimum moisture content (OMC) = 11.11

Maximum dry density(MDD) = 2.14

Table 6.11.showing values after adding terrazyme

Amount of water added	4%	8%	12%
Weight of mould(W1)	2306	2306	2306
Compacted weight + mould (W2)	5013	5027	5045
Weight of wet soil(W2+W1)	7319	7233	7351
Volume of mould(V),cm3	1000	1000	1000
Bulk density=(W2-W1)/V, g/cc	2.707	2.721	2.739
Weight of container with lid(M1)	18	18	18
Weight of lid + wet soil(M2)	36	43	49
Weight of lid + dry soil(M3)	33	39	45
Water content (w)=(M2-M3)/(M3-M1)	20	19.2	14.8
Dry density, g/cc=e/(1+w)	1.87	1.98	2.12

Fig 6.5 Shows graph for compaction of soil and terrazyme

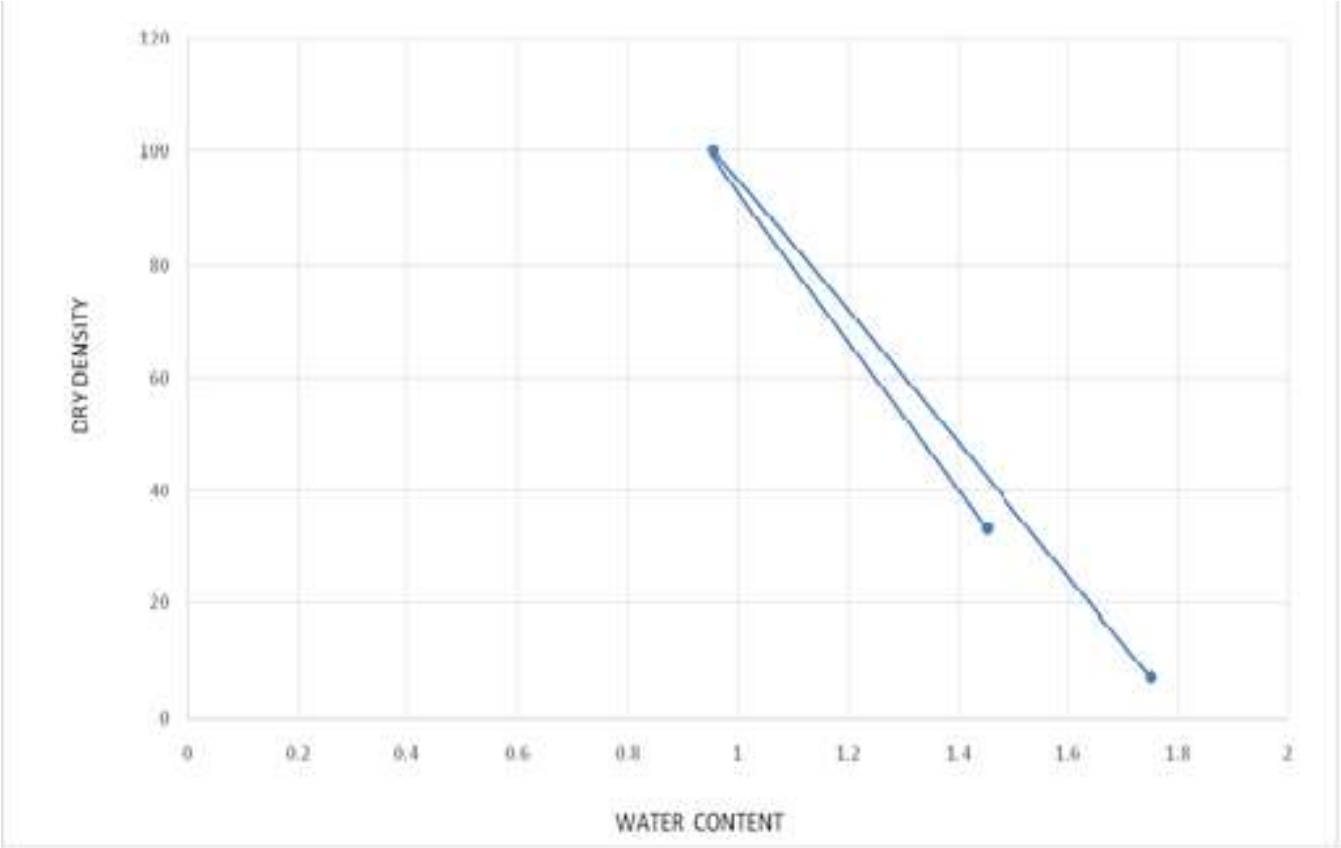

The results we observed are:

Optimum moisture content (OMC) =10.2

Maximum dry density (MDD) = 1.99

6.5. Swelling index

Table 6.12 shows swelling values of soil sample

S.No	Weight of sample in kerosene	Weight of sample in water	Weight of sample in kerosene after 24 hours	Weight of sample in water after 24 hours	%of swelling
1	200	226	194	206	6.18%

Table 6.13 shows swelling values of soil & phosphogypsum

S.No	Weight of sample in kerosene	Weight of sample in water	Weight of sample in kerosene after 24 hours	Weight of sample in water after 24 hours	%of swelling
1	206	224	200	216	8%

Table 6.14 shows swelling values of soil & terrazyme

S.No	Weight of sample in kerosene	Weight of sample in water	Weight of sample in kerosene after 24 hours	Weight of sample in water after 24 hours	%of swelling
1	124	120	108	106	5.8%

6.6 CBR test results of untreated black cotton soil and treated with phosphogypsum and terrazyme

6.6.1 CBR values of untreated soil

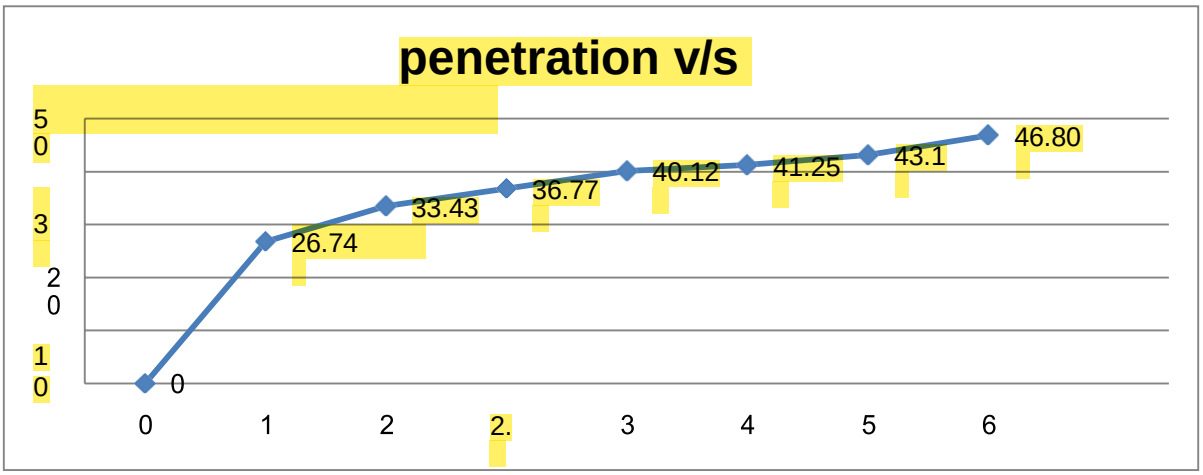

CBR value=2.68%

Fig 6.7 presents the CBR value of untreated black cotton soil

6.6.2 CBR values of soil and 20% Phosphogypsum

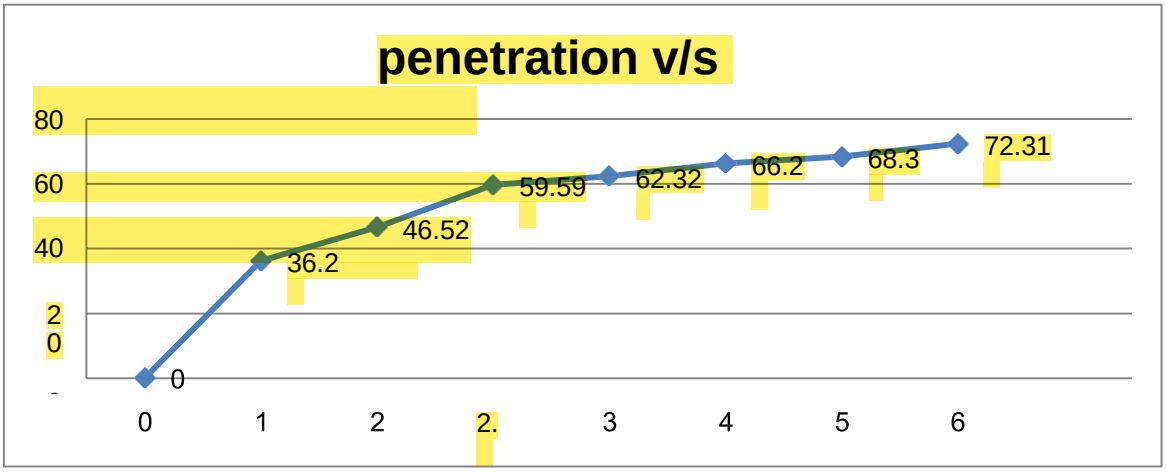

CBR value=4.35%

Fig 6.8 presents the CBR value of black cotton soil treated with 20% phosphogypsum

6.6.3 CBR values of soil +20% Phosphogypsum+20% terrazyme

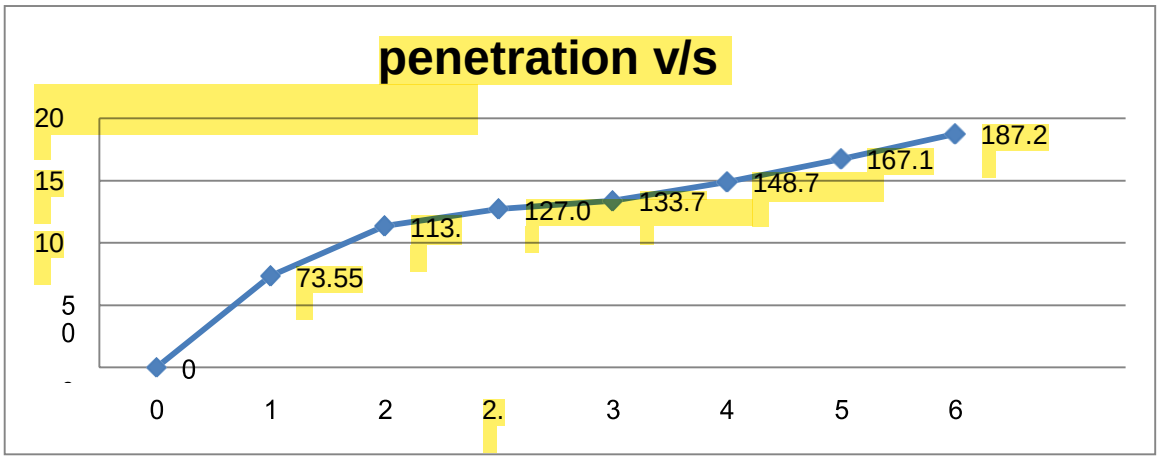

CBR value=9.2%

Fig 6.9 presents the CBR value of black cotton soil treated with 20%phosphogypsum and 20% terrazyme

6.6.4 CBR values of soil with different percentages of Phosphogypsum And terrazyme

Penetration (mm)	CBR(%)	Penetration (mm)	CBR (%)	Penetration (mm)
2.5	2	3	3.5	2.98
5	3	4	5	4.24
7.5	-	8	9	5.02

Table 6.15 presents the CBR values black cotton soil treated with various percentages

S.NO	% mixtures	CBR(%)
1	**B.c**	**2.60**
2	B.c+10%PG	3.90
3	**B.c+20%PG**	**4.2**
4	B.c+30%PG	3.90
5	B.c+20%PG+5%TE	4.70
6	B.c+20%PG+10%TE	5.20
7	B.c+20%PG+15%TE	6.70
8	**B.c+20%PG+20%TE**	**9.20**
9	B.c+20%PG+25%TE	5.90

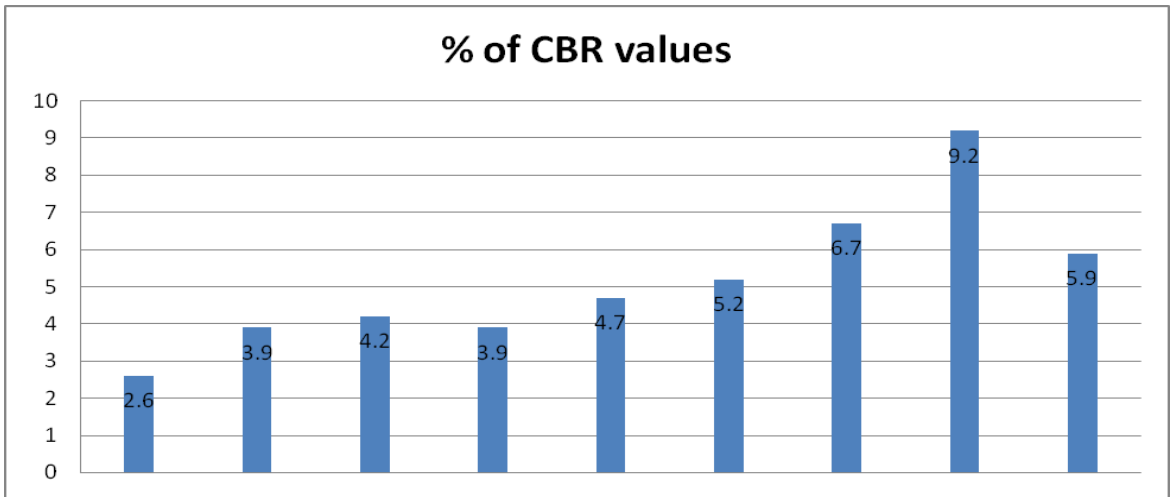

Fig 6.10 presents the CBR values black cotton soil treated with various percentages of quarry dust and coir fiber

6.7 UCS test results of untreated black cotton soil and treated with Phosphogypsum Terrazyme

6.7.1 UCS values of black cotton soil

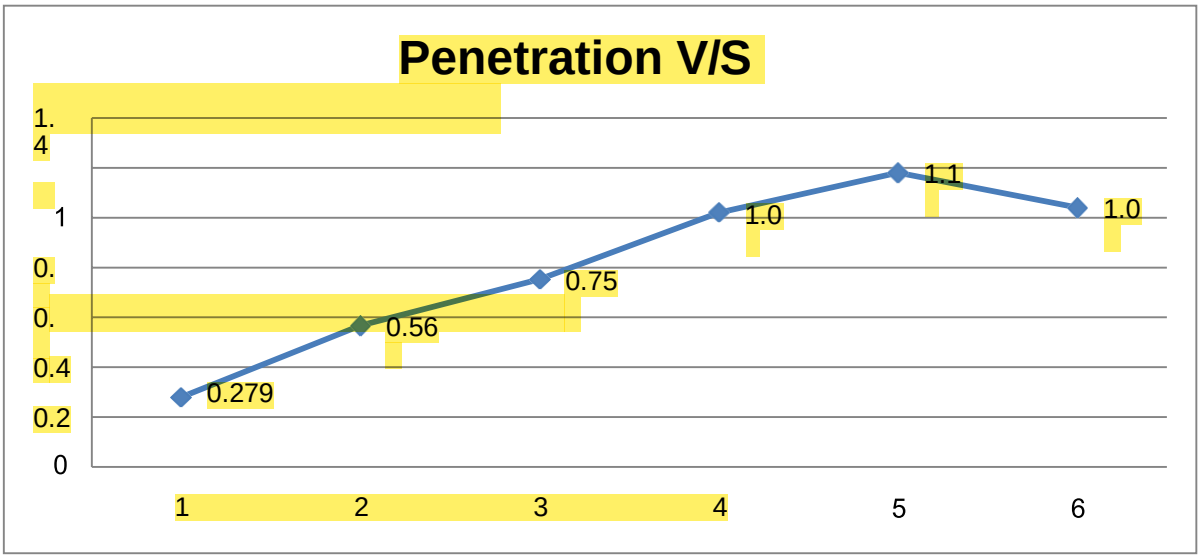

Unconfined compressive strength=1.18 kg/cm^2
cohesive strength=0.905 kg/cm^2

Fig 6.11 presents the UCS value of untreated black cotton soil

6.7.2 UCS values of black cotton soil with 20% Phosphogypsum

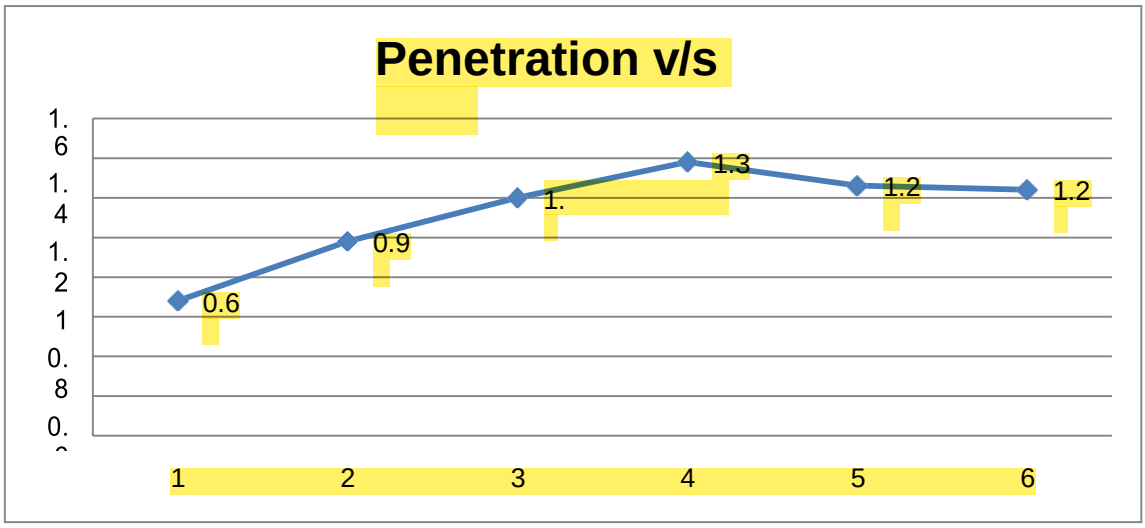

unconfined compressive strength=1.38 kg/cm^2
cohesive strength=0.69 kg/cm^2

Fig 6.12 presents the UCS value of black cotton soil treated with 20% Phosphogypsum

6.7.3 UCS values of soil with 20 % of Phosphogypsum and 20% terrazyme

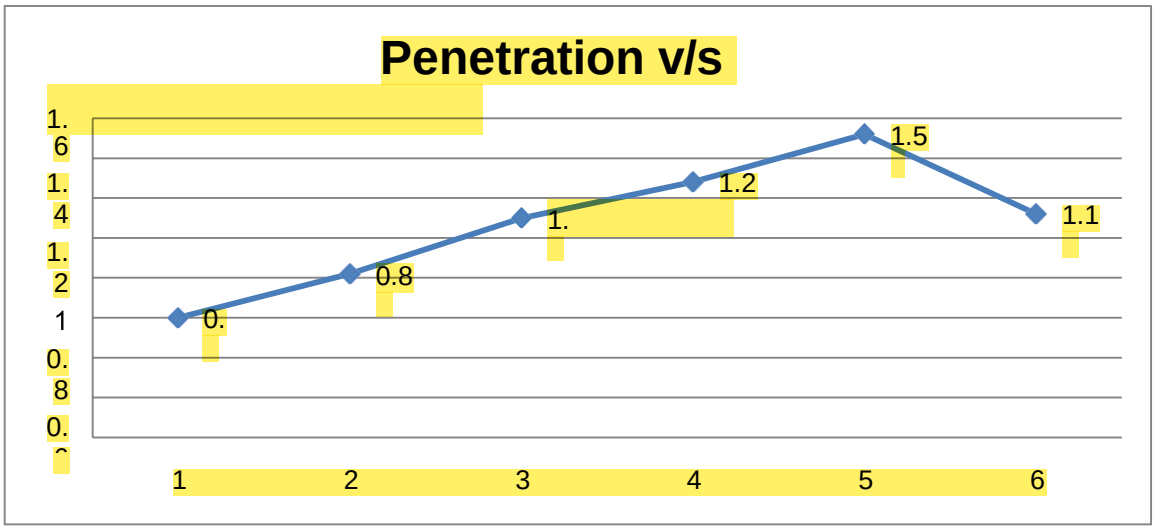

unconfined compressive strength=1.52 kg/cm^2
cohesive strength=0.76 kg/cm^2

Fig 6.13 presents the CBR value of black cotton soil treated with 20% Phosphogypsum and 20% terrazyme

Table 6.1presents the UCS values black cotton soil treated with various percentages of Phosphogypsum and terrazyme

S.NO	MIXTURE	UCS (KG/CM$^{2)}$
1	**SOIL**	**1.18**
2	SOIL+10%PG	1.26
3	**SOIL+20%PG**	**1.32**
4	SOIL+30%PG	1.2
5	SOIL+20%PG+5%FA	1.24
6	SOIL+20%PG+10%FA	1.27
7	SOIL+20%PG+15%FA	1.39
8	**SOIL+20%PG+20%FA**	**1.52**
9	SOIL+20%QD+25%FA	1.47

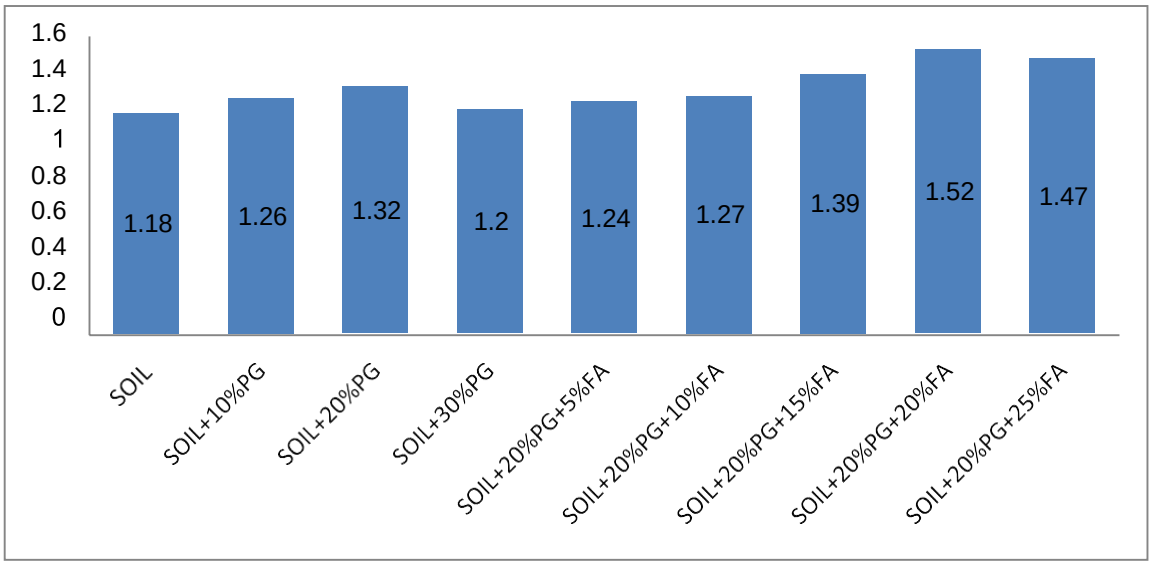

Fig 6.14: UCS values of soil with various combinations of Phosphogypsum and terrazyme

Final results:

COURSE NO-7

Test	soil	soil+phosphogypsum	Soil+terrazyme	Soil+phosphogypsum+ Terrazyme
Specific gravity	3.52	1.6	1.388	1.29
Liquid limit	50%	25%	100%	60%
Plastic limit	21.62%	16.6%	20%	35.29%
OMC	12.5%	11.11%	7.5%	6.7%
Max dry density	1.88	2.14	1.75	1.90
Swell index	6.18%	6.85%	7.2%	8%
C.B.R	2.6	4.2	6.70	9.20
U.C.S	1.18	1.32	1.39	1.52

CONCLUSION

Based on the experiment conducted to determine the reduction soil swelling by partial replacement with phosphogypsum and terrazyme in equal proportions .The following can be deduced

1) It was observed that the liquid limit of soil is 50% by treating with 20% phosphogypsum liquid limit decreased to 25%

2) It was observed that the liquid limit of soil is 50% by treating with 20% terrazyme liquid limit decreased to 20%

3) It was observed that the liquid limit of soil is 50% by treating with 20% phosphogypsum and 20% terrazyme liquid limit remains same

4) It was noticed that the plastic limit of the soil is 21.62% by treated with 20% phosphogypsum it reduced to 16.6%

5) It was noticed that the plastic limit of the soil is 21.62% by treated with 20% phosphogypsum and 20% terrazyme it was increased to 35.29%

6) It was observed that the optimum moisture content of the soil is 12.5%by addition of 20% phosphogypsum it was reduced to 11.11%

7) It was noticed by adding 20% phosphogypsum and 20% terrazyme it was reduced to 6.7%

8) It was observed that the maximum dry density of soil is 1.88g/cc by adding 20% phosphogypsum and 20% terrazyme it was increased to 1.90g/cc

9) It was observed that swelling index of soil sample is 6.18% after adding 20% phosphogypsum and 20% terrazyme it was increased to 8%

10) It was observed that the CBR value of soil sample is 2.60% by addition of 20% Phosphogypsum is increased to 4.2%.

11) From the experimentation it is observed that Adding 20% of terrazyme to the above combination it was further increased to 9.2%

12) It was noticed that initially the UCS value of soil is 1.18 kg/cm^2 by treating with 20% Phosphogypsum it was increased to 1.32 kg/cm$^{2.}$ By further treating with 20% Terrazyme the UCS value further increased to 1.52 kg/cm^2

REFERENCES

- Mishra and Mathur (2004) had stabilized expansive soil using phosphogypsum and observed the optimum percentage as 40%
  .
- Degirmenci et al. (2007) had investigated the effect of phosphogypsum on liquid limit (wL), plastic limit (wP), IP, OMC, MDD and UCS of expansive soil. By stabilization with phosphogypsum, the IP reduced, MDD increased, OMC decreased, and UCS increased.

- Yilmaz and Civelekoglu (2009) had studied the effect of gypsum on Atterberg's limit, UCS, Sp, and cation exchange capacity of bentonite and concluded that up to 5% addition of gypsum the properties of expansive clay improved significantly.

- V Saini, P Vaishnava -Journal of Advances in Engineering

- S Athira, BK Safana, K Sabu - International Journal of Engineering.

- V Rajoria, S Kaur - International Journal of Research in Engineering.

- **Kumar S. Prasanna. M. (2012**). Silica and calcium effects on geotechnical properties of expansive soil extracted from rice husk ash IPCBEE. vol.32.

- STM, Standard Test Method for Liquid Limit, Plastic Limit and Plasticity Index of Soils, Annual Book of ASTM Standards, D4318, 2010

- Değirmenci N., Okucu A., Turabi A., Application of Phosphogypsum in Soil Stabilization, Building and Environment, 2006

- Mitchell, J. K., & Raad, L., Control of Volume Changes in Expansive Earth Materials, Proceeding of Workshop on Expansive Clays and Shales in Highway Design and Construction, Vol. 2, Federal Highway Administration, Washington, D. C., 1973

1.3.2. Name and Average percentage of courses that include experiential learning through project work/field work/internship during last five years

Sample Project EEE

Academic Year 2020-2021

Name of the Project: MODELING OF SEVEN LEVEL INVERTER BASED GRID INTEGRATED PHOTOVOLTAIC POWER GENERATION SYSTEM

S.NO	COURSE NUMBER	COURSE NAME	MAPPING PAGE NO
1	1	Electrical Circuit Analysis – I	
2	2	Electrical Circuit Analysis – II	
3	3	Electrical Machines-I	5,7,8,11
4	4	Basic Electronics and Devices	14,24,29,30,31
5	5	Electro Magnetic Fields	26
6	6	Electrical Measurements	14,17,49,52
7	7	Electrical Machines-II	24,28,32
8	8	Switching Theory and Logic Design	56
9	9	Control Systems	4,6,7,11,18,20
10	10	Power Systems-I	9
11	11	Power Systems-II	25,32,38
12	12	Renewable Energy Sources	24,34,48,
13	13	Signals and Systems	2,15,16,35,37,42,53
14	14	Pulse & Digital Circuits	17,38
15	15	Power Electronics	6,9,25,26,27,32,33,36,39,
16	16	Power Electronic Controllers & Drives	1,5,10,12,28,40,43,49,50,52
17	17	Power System Analysis	25
18	18	Micro Processors and Micro controllers	1,5,6,13,14,49,51
19	19	Neural Networks &Fuzzy Logic	
20	20	Utilization of Electrical Energy	25
21	21	Linear IC Applications	18,19,38
22	22	Power System Operation & Control	22,23
23	23	Switchgear and Protection	35
24	24	Instrumentation	
25	25	Special Electrical Machines	5,8,34
26	26	Digital Control Systems	22
27	27	HVDC Transmission	
28	28	Flexible Alternating Current Transmission Systems	62
29	29	Electrical Distribution Systems	50

1 Total Number of Domain subjects: 29
2 Number of Subjects that include experiential learning through project work: 25
3 Average: 86.2%

HOD-EEE PRINCIPAL

SAMPLE PROJECT

MODELING OF SEVEN LEVEL INVERTER BASED GRID INTEGRATED PHOTOVOLTAIC POWER GENERATION SYSTEM

A Dissertation Report Submitted in Partial Fulfillment of the Requirements for the Award of the Degree of

BACHELOR OF TECHNOLOGY

IN

ELECTRICAL AND ELECTRONICS ENGINEERING

Submitted by

K. JYOSNA (17ME1A0229)

N. RAVALI (17ME1A0239)

P. SURYA NARAYANA (18ME5A0203)

MD. ROSHAN JAMEER (17ME1A0235)

Under the Esteemed Guidance of

Mr. R. NAVEEN KUMAR
Assistant Professor

DEPARTMENT OF ELECTRICAL AND ELECTRONICS ENGINEERING

RAMACHANDRA COLLEGE OF ENGINEERING

(AFFILIATED TO JNT UNIVERSITY, KAKINADA)

VATLURU, ELURU, WEST GODAVARI DIST, A.P, INDIA-534007.

2020-21

DEPARTMENT OF ELECTRICAL AND ELECTRONICS ENGINEERING

RAMACHANDRA COLLEGE OF ENGINEERING

ELURU-534007.

CERTIFICATE

This is to certify that the project work entitled "MODELING OF SEVEN LEVEL INVERTER BASED GRID INTEGRATED PHOTOVOLTAIC POWER GENERATION SYSTEM" submitted by K.JYOSNA (17ME1A0229), N. RAVALI (17ME1A0239), P.SURYA NARAYANA (18ME5A0203), MD. ROSHAN JAMEER (17ME1A0235) in partial fulfillment of the requirements for the award of degree of the Bachelor of Technology in the Department of Electrical & Electronics Engineering during the academic year 2020-2021.

Mr. R. Naveen Kumar
Project Supervisor

Dr. S. Jayalakshmi
Head of the Department

External Examiner

ACKNOWLEDGEMENTS

We wish to express our sincere deep sense of gratitude and indebtedness to our project guide *Mr. R. NAVEEN KUMAR, Assistant Professor* of Electrical and Electronics Engineering Department, for his significant suggestions and help in every respect to accomplish the project work. His persisting encouragement, everlasting patience and keen interest in discussions have benefited us to the extent that cannot be spanned by words. He has been the continuous source of inspiration for us throughout the work.

We are very thankful to *Dr. S. JAYALAKSHMI*, Head of the Departmentof Electrical and Electronics Engineering and Principal, *Dr. SANJAY DOLA S* for their indispensible encouragement to complete the Thesis.

We would like to thank all the faculty members of the Department of Electrical and Electronics Engineering for their direct or indirect support for helping us in completion of this Thesis.

Last but not the least we convey our thanks to one and all who are involved directly or indirectly helped us in successful completion of this Thesis.

K. JYOSNA (17ME1A0229),
N. RAVALI (17ME1A0239),
P. SURYA NARAYANA (18ME5A0203),
MD. ROSHAN JAMEER (17ME1A0235).

ABSTRACT

In this project to improve the grid performance a three phase seven level inverter is used with solar PV generation system. Generally grid undergoes to the power problems. In this paper the active and reactive power compensation will be done at the grid side. During voltage sag condition continues power supply should be provided to grid. A DC/DC converter is used; this integrates a DC-DC boost converter and a transformer to convert the output voltage of the PV system into two independent voltage sources. This new seven-level inverter is configured using a capacitor with a three phase full-bridge power converter, connected in cascade.

This capacitor should be selected based on the two output voltage sources of DC-DC power converter into a three-level DC voltage and the full-bridge power converter further converts this three-level DC voltage into a seven-level AC voltage. The inverter should be controlled in such way that it should inject reactive power in case of three phase balanced voltage sag condition in order to raise voltage in all three phases. In this way, the proposed solar power generation system generates a sinusoidal output current to the grid, which is approximately in phase with the voltage. The simulation results presented to validate the performance of proposed converter using MATLAB/SIMULINK software.

CONTENTS

		Page No
Abstract		i
List of Figures		ii
List of Tables		iv
Abbreviations / Acronyms		v
Chapter 1: INTRODUCTION		1-3
Chapter 2: SOLAR & WIND NON-CONVENTIONAL ENERGY		4-20
2.1	Photovoltaic Effect	04
2.2	Solar Cell	08
	2.2.1 Types of Photovoltaic cells	10
	2.2.2 Main Operation	11
	2.2.3 Equivalent Circuit	11
2.3	Working Factors Of PV Array	17
Chapter 3: MULTILEVEL INVERTERS		21-35
3.1	Introduction	21
	3.1.1 Introduction GTO	21
	3.1.2 Introduction IGBT	21
3.2	Types Of Multilevel Inverters	22
	3.2.1 Flying Capacitor Multilevel Inverter Topology	23
	3.2.2 Cascaded H-Bridge Multilevel Inverter Topology	25
	3.2.3 Diode Clamped Multilevel Inverters	26
3.3	Cascaded Multilevel Inverters	27
	3.3.1 Gate Signal and Inverter Operation	28
	3.3.2 Blanking Time	29
3.4	Cascaded Inverter Configuration	30

3.4.1 Single-Phase Structure **30**

3.4.2 Three-Phase Structure **32**

3.4.3 Separated DC Sources(SDCSs) **34**

Chapter 4: PROPOSED SYSTEM **36-46**

4.1 Circuit Configuration **36**

4.2 DC-DC Power Converter **37**

4.3 Seven-Level Inverter **38**

Chapter 5: MATLAB & SIMULINK **47-58**

5.1 MATLAB **47**

5.1.1 Introduction **47**

5.1.2 Key Features **47**

5.2 SIMULINK **47**

5.2.1 Introduction **47**

5.2.2 Key Features **48**

5.2.3 Block Diagram **48**

5.2.4 Simulink Block Libraries **50**

5.2.5 Sub Systems **50**

5.2.6 Solvers **50**

5.2.6.1 Fixed-Step Solvers **51**

5.2.6.2 Variable-Step Solvers **51**

5.2.6.3 Continuous Solvers **51**

5.2.6.4 Discrete Solvers **52**

5.3 The Power System Block Set **52**

5.4 Simulink Blocks Used In The Simulation **53**

Chapter 6: SIMULATION RESULTS **59-60**

Conclusion **61**

Future Scope **62**

References **63**

LIST OF FIGURES

Figure No.	Figure Name	Page No.
Figure 2.1	PV effect converts the photon energy into voltage across the pn junction	5
Figure 2.2	Basic construction of PV cell	9
Figure 2.3	The PV array set up	10
Figure 2.4	Structure of a model solar cell	11
Figure 2.5	Construction of PV Module	11
Figure 2.6	PV Cell Equivalent Circuit	12
Figure 2.7	Power-Voltage (PV) Characteristics of Photo Voltaic Module	14
Figure 2.8	Variation of P-V characteristics of photo voltaic module	14
Figure 2.9	Solar panel system	15
Figure 2.10	Sun-tracking actuator principle	16
Figure 2.11	Current vs Voltage (I-V) characteristics of PV module in sunlight and in the dark	17
Figure 2.12	Bypass diode in PV string minimizes power loss under heavy shadow	19
Figure 2.13	Effect of temperature on PV characteristics	20
Figure 3.1	Multilevel inverter topologies	23
Figure 3.2(a)	Three-level flying capacitor inverter phase leg structure	24
Figure 3.2(b)	Output voltage waveforms	24
Figure 3.3(a)	Five-Level flying capacitor inverter phase leg structure	25
Figure 3.3(b)	Output voltage waveforms	25
Figure 3.4(a)	The structure of one phase leg of the five-level cascaded multilevel inverter	26
Figure 3.4(b)	Output voltage waveforms	26
Figure 3.5(a)	The three-level diode champed inverter phase leg structure	28
Figure 3.5(b)	Output voltage waveform	28
Figure 3.6	An H-bridge cell	29
Figure 3.7	Repeated zero-level switching pattern	29
Figure 3.8	Swapped zero-level switching pattern	30
Figure 3.9	Apply blanking time to the gate signal	31
Figure 3.10	Single-phase configuration of an m-level cascaded inverter	32

Figure 3.11	Waveform showing a nine-level output phase voltage and each H-bridge output voltage	33
Figure 3.12	Three-phase seven level inverter using cascaded-inverters with SDCSs	34
Figure 3.13	Two phase and line voltages of three-phase seven-level cascaded inverter	35
Figure 3.14	Two possible DC source connections	36
Figure 3.15	A short circuit possibility of each case	36
Figure 4.1	Configuration of the proposed solar generation system	38
Figure 4.2(a)	Operation of DC-DC power converter SD1 is on	40
Figure 4.2(b)	Operation of DC-DC power converter SD1 is off	40
Figure 4.3(a)	Operation of seven-level inverter in the positive half cycle mode1	42
Figure 4.3(b)	Operation of seven-level inverter in the positive half cycle mode2	42
Figure 4.3(c)	Operation of seven-level inverter in the positive half cycle mode3	42
Figure 4.3(d)	Operation of seven-level inverter in the positive half cycle mode4	42
Figure 4.4(a)	Operation of seven-level inverter in the negative half cycle mode5	43
Figure 4.4(b)	Operation of seven-level inverter in the negative half cycle mode6	43
Figure 4.4(c)	Operation of seven-level inverter in the negative half cycle mode7	43
Figure 4.4(d)	Operation of seven-level inverter in the negative half cycle mode8	43
Figure 4.5	Model of seven-level inverter when utility voltage in the range of smaller than Vdc/3	45
Figure4.6	Configuration of the proposed solar generation system for suppressing the leakage current	47
Figure 4.7(a)	Simulation results utility voltage of proposed solar power generation system	48
Figure 4.7(b)	Simulation results of negative terminal voltage for adding the symmetric filter inductor of proposed solar power generation system Simulation results of negative terminal voltage for adding the symmetric filer inductor and the extra filter Cf-Rf-Cf of proposed solar power generation system	48
Figure 6.1	Simulink Diagram	59
Figure 6.2	Experimental results for the dc side of the seven-level inverter	59
Figure 6.3	Experimental results for the ac side of the seven-level inverter	60
Figure 6.4	Experimental results of the dc–dc power converter	60

LIST OF TABLES

Table No.	Table Name	Page No.
Table 2.1	Data for a flat plate capacitor used for heating	21
Table 4.1	states of power electronic switches for seven-level inverter	48

ABBREVIATIONS/ACRONYMS

Acronym		Abbreviation
DC	**:**	Direct Current
AC	**:**	Alternating Current
EMI	**:**	Electromagnetic Interference
PV	**:**	Photovoltaic
LCD	**:**	Liquid Crystal Display
LED	**:**	Light Emitting Diode
CPV	**:**	Concentrated Photovoltaic
CSP	**:**	Concentrated Solar Panel
GTO	**:**	Gate Turn off Thyristors
IGBT	**:**	Isolated Gate Bipolar Transistor
BJT	**:**	Bipolar Junction Transistor

CHAPTER-1
INTRODUCTION

The extensive use of fossil fuels has resulted in the global problem of greenhouse emissions. Moreover, as the supplies of fossil fuels are depleted in the future, they will become increasingly expensive. Thus solar energy is becoming more important since it produces less pollution and the cost of fossil fuel energy is rising, while the cost of solar arrays is decreasing. In particular, small-capacity distributed power generation systems using solar energy may be widely used in residential applications in the near future.

The power conversion interface is important to grid-connected solar power generation systems because it converts the DC power generated by a solar cell array into AC power and feeds this AC power into the utility grid. An inverter is necessary in the power conversion interface to convert the DC power to AC power. Since the output voltage of a solar cell array is low, a DC-DC power converter is used in a small-capacity solar power generation system to boost the output voltage so it can match the DC bus voltage of the inverter. The power conversion efficiency of the power conversion interface is important to insure there is no waste of the energy generated by the solar cell array. The active devices and passive devices in the inverter produce a power loss. The power losses due to active devices include both conduction losses and switching losses. Conduction loss results from the use of active devices, while the switching loss is proportional to the voltage and the current changes for each switching and switching frequency. A filter inductor is used to process the switching harmonics of an inverter, so the power loss is proportional to the amount of switching harmonics.

The voltage change in each switching operation for a multi-level inverter is reduced in order to improve its power conversion efficiency and the switching stress of the active devices. The amount of switching harmonics is also attenuated, so the power loss caused by the filter inductor is also reduced. Therefore, multi-level inverter technology has been the subject of much research in the past few years. In theory, multi-level inverters should be designed with higher voltage levels in order to

improve the conversion efficiency and to reduce harmonic content and electromagnetic interference (EMI).

Conventional multi-level inverter topologies include the diode-clamped, the flying-capacitor and the cascade H-bridge types. Diode-clamped and flying-capacitor multi-level inverters use capacitors to develop several voltage levels. But it is difficult to regulate the voltage of these capacitors. Since it is difficult to create an asymmetric voltage technology in both the diode-clamped and the flying-capacitor topologies, the power circuit is complicated by the increase in the voltage levels that is necessary for a multi-level inverter. For a single-phase seven-level inverter, twelve power electronic switches are required in both the diode-clamped and the flying-capacitor topologies. Asymmetric voltage technology is used in the cascade H-bridge multi-level inverter to allow more levels of output voltage, so the cascade H-bridge multi-level inverter is suitable for applications with increased voltage levels. Two H-bridge inverters with a dc bus voltage of multiple relationships can be connected in cascade to produce a single-phase seven-level inverter and eight power electronic switches are used. More recently, various novel topologies for seven-level inverters have been proposed. For example, a single-phase seven-level grid-connected inverter has been developed for a photovoltaic system. This seven-level grid-connected inverter contains six power electronic switches. However, three dc capacitors are used to construct the three voltage levels, which results in that balancing the voltages of the capacitors is more complex. In [19], a seven- level inverter topology, configured by a level generation part and a polarity generation part, is proposed.

There, only power electronic switches of the level generation part switch in high frequency, but ten power electronic switches and three dc capacitors are used. In [20], a modular multilevel inverter with a new modulation method is applied to the photovoltaic grid-connected generator. The modular multilevel inverter is similar to the cascade H-bridge type. For this, a new modulation method is proposed to achieve dynamic capacitor voltage balance. In [21], a multilevel dc-link inverter is presented to overcome the problem of partial shading of individual photovoltaic sources that are connected in series. The dc bus of a full-bridge inverter is configured by several individual dc blocks, where each dc block is composed of a solar cell, a power

electronic switch and a diode. Controlling the power electronics of the dc blocks will result in a multilevel dc-link voltage to supply a full-bridge inverter and to simultaneously overcome the problems of partial shading of individual photovoltaic sources.

This project proposes a new solar power generation system. The proposed solar power generation system is composed of a DC/DC power converter and a seven-level inverter. The seven-level inverter is configured using a capacitor selection circuit and a full-bridge power converter, connected in cascade. The seven-level inverter contains only six power electronic switches, which simplifies the circuit configuration. Since only one power electronic switch is switched at high frequency at any time to generate the seven-level output voltage, the switching power loss is reduced and the power efficiency is improved. The inductance of the filter inductor is also reduced because there is a seven-level output voltage. In this study, a prototype is developed and tested to verify the performance of the proposed solar power generation system.

CHAPTER-2
NON-CONVENTIONAL ENERGY

2.1 Photovoltaic Effect

Photovoltaic (PV) is a method of generating electrical power by converting solar radiation into direct current electricity using semiconductors that exhibit the photovoltaic effect. Photovoltaic power generation employs solar panels comprising a number of cells containing a photovoltaic material. Materials presently used for photovoltaic include mono crystalline silicon, polycrystalline silicon, amorphous silicon, cadmium telluride, and copper indium selenide/sulfide. Due to the growing demand for renewable energy sources, the manufacturing of solar cells and photovoltaic arrays has advanced considerably in recent years.

As of 2010, solar photovoltaic generates electricity in more than 100 countries and, while yet comprising a tiny fraction of the 4800 GW total global power-generating capacity from all sources, is the fastest growing power-generation technology in the world.

Between 2004 and 2009, Grid-connected PV capacity increased at an annual average rate of 60 percent, to some 21 GW. Such installations may be ground-mounted (and sometimes integrated with farming and grazing) or built into the roof or walls of a building, known as Building Integrated Photovoltaics or BIPV for short. Off-grid PV accounts for an additional 3–4 GW.

Driven by advances in technology and increases in manufacturing scale and sophistication, the cost of photovoltaic has declined steadily since the first solar cells were manufactured. Net metering and financial incentives, such as preferential feed-in tariffs for solar-generated electricity; have supported solar PV installations in many countries.

The photovoltaic effect is the generation of a voltage (or a corresponding electric current) in a material upon exposure to light. Though the photovoltaic effect is directly related to the photoelectric effect, the two processes are different and should

be distinguished. In the photoelectric effect, electrons are ejected from a material's surface upon exposure to radiation of sufficient energy. The photovoltaic effect is different in that the generated electrons are transferred between different bands (i.e. from the valence to conduction bands) within the material, resulting in the build-up of a voltage between two electrodes. In most photovoltaic applications the radiation is sunlight and for this reason the devices are known as solar cells. In the case of a p-n junction solar cell, illumination of the material results in the generation of an electric current as excited electrons and the remaining holes are swept in different directions by the built-in electric field of the depletion region. The photovoltaic effect was first observed by Alexandre-Edmond Becquerel in 1839.

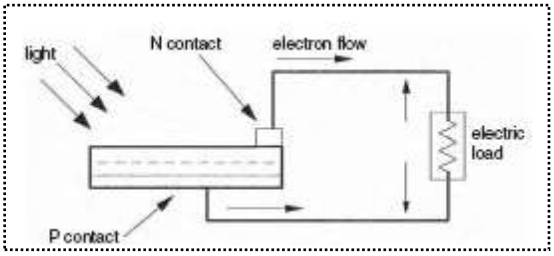

Fig 2.1: PV effect converts the photon energy into voltage across the pn junction

As of October 2010, the largest photovoltaic (PV) power plants in the world are the Sarnia Photovoltaic Power Plant (Canada, 80 MW), the Olmedilla Photovoltaic Park (Spain, 60 MW), the Strasskirchen Solar Park (Germany, 54 MW), the Lieberose Photovoltaic Park (Germany, 53 MW), the Puertollano Photovoltaic Park (Spain, 50 MW), the Moura photovoltaic power station (Portugal, 46 MW), and the Waldpolenz Solar Park (Germany, 40 MW).

APPLICATIONS:

In Buildings:

Photovoltaic arrays are often associated with buildings: either integrated into them, mounted on them or mounted nearby on the ground.

Arrays are most often retrofitted into existing buildings, usually mounted on top of the existing roof structure or on the existing walls. Alternatively, an array can be located separately from the building but connected by cable to supply power for

the building. In 2010, more than four-fifths of the 9,000 MW of solar PV operating in Germany was installed on rooftops.

In Transport:

PV has traditionally been used for electric power in space. PV is rarely used to provide motive power in transport applications, but is being used increasingly to provide auxiliary power in boats and cars. A self-contained solar vehicle would have limited power and low utility, but a solar-charged vehicle would allow use of solar power for transportation. Solar-powered cars have been demonstrated.

Standalone Devices:

Until a decade or so ago, PV was used frequently to power calculators and novelty devices. Improvements in integrated circuits and low power LCD displays make it possible to power such devices for several years between battery changes, making PV use less common. In contrast, solar powered remote fixed devices have seen increasing use recently in locations where significant connection cost makes grid power prohibitively expensive. Such applications include water pumps, parking meters, emergency telephones, trash compactors, temporary traffic signs, and remote guard posts & signals.

Rural Electrification:

Developing countries where many villages are often more than five kilometers away from grid power have begun using photovoltaic. In remote locations in India a rural lighting program has been providing solar powered LED lighting to replace kerosene lamps. The solar powered lamps were sold at about the cost of a few months' supply of kerosene. Cuba is working to provide solar power for areas that are off grid. These are areas where the social costs and benefits offer an excellent case for going solar though the lack of profitability could relegate such endeavors to humanitarian goals.

Solar Roadways:

A 45 mi (72 km) section of roadway in Idaho is being used to test the possibility of installing solar panels into the road surface, as roads are generally unobstructed to the sun and represent about the percentage of land area needed to replace other energy sources with solar power.

Solar Power Satellites:

Design studies of large solar power collection satellites have been conducted for decades. The idea was first proposed by Peter Glaser, then of Arthur D. Little Inc; NASA conducted a long series of engineering and economic feasibility studies in the 1970s, and interest has revived in first years of the 21st century. From a practical economic viewpoint, the key issue for such satellites appears to be the launch cost. Additional considerations will include developing space based assembly techniques, but they seem to be less a hurdle than the capital cost. These will be reduced as photovoltaic cell costs are reduced or alternatively efficiency increased.

PERFORMANCE:

Temperature:

Generally, temperatures above room temperature reduce the performance of photovoltaic.

Optimum Orientation of Solar Panels:

For best performance, terrestrial PV systems aim to maximize the time they face the sun. Solar trackers aim to achieve this by moving PV panels to follow the sun. The increase can be by as much as 20% in winter and by as much as 50% in summer. Static mounted systems can be optimized by analysis of the Sun path. Panels are often set to latitude tilt, an angle equal to the latitude, but performance can be improved by adjusting the angle for summer or winter

Irradiation:

Irradiation is the process by which an item is exposed to radiation. The exposure can be intentional, sometimes to serve a specific purpose, or it can be accidental. In common usage the term refers specifically to ionizing radiation, and to a level of radiation that will serve that specific purpose, rather than radiation exposure to normal levels of background radiation or abnormal levels of radiation due to accidental exposure. This term also applies to 'non-ionizing radiation as microwaves or to low frequency (50/60 Hz power supply), high frequency (as cellular phones, radio and TV transmissions).

Insolation:

Insolation is a measure of solar radiation energy received on a given surface area in a given time. It is commonly expressed as average irradiance in watts per square meter

(W/m2) or kilowatt-hours per square meter per day (kW·h/(m^2·day)) (or hours/day). In the case of photovoltaics it is commonly measured as kWh/(year/KW) (kilowatt hours per year per kilowatt peak rating).

The given surface may be a planet, or a terrestrial object inside the atmosphere of a planet, or any object exposed to solar rays outside of an atmosphere, including spacecraft. Some of the solar radiation will be absorbed while the remainder will be reflected. Most commonly, the absorbed solar radiation causes radiant heating, however, some systems may store or convert some portion of the absorbed radiation, as in the case of photovoltaics or plants. The proportion of radiation reflected or absorbed depends on the object's reflectivity or albedo, respectively.

2.2 SOLAR CELL:

A solar cell is a solid state device that converts the energy of sunlight directly into electricity by the photovoltaic effect. Assemblies of cells are used to make solar modules, also known as solar panels. The energy generated from these solar modules, referred to as solar power, is an example of solar energy.

The origin of the PV potential is the difference in the chemical potential, called the Fermi level, of the electrons in the two isolated materials. When they are joined, the junction approaches a new thermodynamic equilibrium. Such equilibrium can be achieved only when the Fermi level is equal in the two materials. This occurs by the flow of electrons from one material to the other until a voltage difference is established between them, which have a potential just equal to the initial difference of the Fermi level. This potential drives the photocurrent in the PV circuit.

Photovoltaics is the field of technology and research related to the practical application of photovoltaic cells in producing electricity from light, though it is often used specifically to refer to the generation of electricity from sunlight.

Cells are described as photovoltaic cells when the light source is not necessarily sunlight. These are used for detecting light or other electromagnetic radiation near the visible range, for example infrared detectors), or measurement of light intensity.

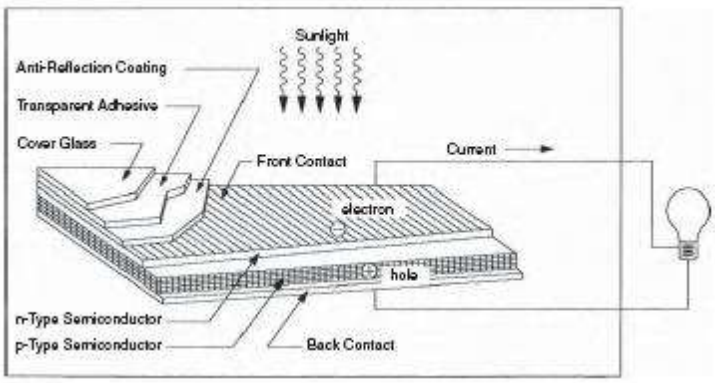

Fig 2.2: Basic construction of PV cell

The diagram above illustrates the operation of a basic photovoltaic cell, also called a solar cell. Solar cells are made of the same kinds of semiconductor materials used in microelectronics, such as silicon (melted sand) or cadmium telluride. For solar cells, a thin semiconductor wafer is specially treated to form an electric field, positive on one side and negative on the other. When light energy strikes the solar cell, electrons are knocked loose from the atoms in the semiconductor material. If electrical conductors are attached to the positive and negative sides, forming an electrical circuit, the electrons can be captured in the form of an electric current. This electricity can then be used to power a load, such as a light or a tool. Each PV cell converts about 5 to 15 percent of the sunlight that hits it into electrical current. Photovoltaic cells are modular. That is, one can be used to make a very small amount of electricity, or many can be used together to make a large amount of electricity.

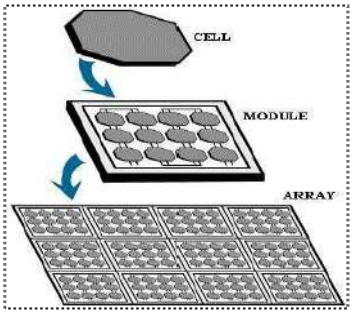

Fig 2.3:The pv array set up

Photovoltaic cell produces only about one-half volt of electricity, cells are often mounted together in groups called modules. Each module holds about forty photovoltaic cells. By being put into modules, the current from a number of cells can

be combined. PV cells can be strung together in a series of modules or strung together in a parallel placement to increase the electrical output.

When multiple PV cell modules are put together, they can form an arrangement called an array or array field. In general, the larger the area of a module or array, the more electricity that will be produced. Photovoltaic modules and arrays produce direct current (dc) electricity. They can be connected in both series and parallel electrical arrangements to produce any required voltage and current combination.

2.2.1 Types Of Photovoltaic Cells:

A monocrystalline PV cell is blue or gray-black in color. At the rounded corner of each cell is a white backing. This backing shows through and makes a pattern that is easy to see. Some people do not use monocrystalline PV cells on their home or businesses because of their appearance. A module of PV cells is usually covered with tempered glass and surrounded by an aluminum frame.

A polycrystalline PV cell looks a little different than a monocrystalline PV cell. Polycrystalline PV cells are shaped like rectangles and colored sparkling blue. There is no white background showing. Thus, these PV cells look more uniform in appearance. Like monocrystalline cells, they are often covered in tempered glass and placed in an aluminum frame.

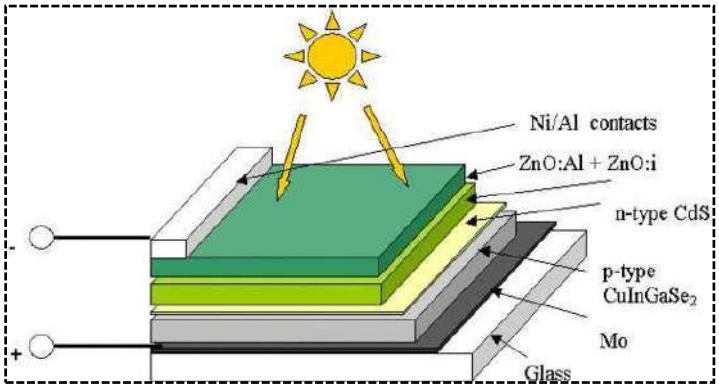

Fig 2.4: Structure of a model Solar Cell

Another type is the amorphous or thin-film cell. This type of PV cell is less durable and not as efficient for energy conversion. Thin-film cells are the future of PV cell technology because they use less semiconductor material, do not need as much energy to manufacture, and are easier to mass produce than other PV cells. Light weight and flexible, this technology can be weaved into the fabric of a building in

applications where surface area is not an issue. Applications include building canopies, facades and rain screens.

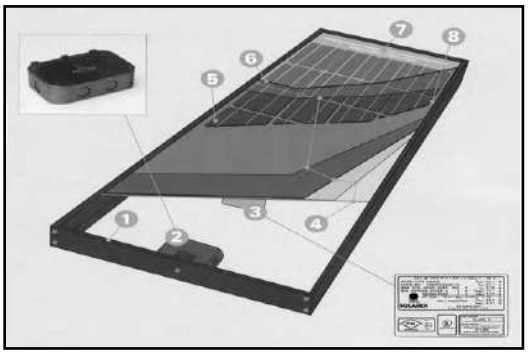

Fig 2.5: Construction of PV module: (1) frame, (2) weatherproof junction box, (3) rating plate, (4) weather protection for 30-yr life, (5) PV cell, (6) tempered high-transmittivity cover glass, (7) outside electrical bus, (8) frame clearance. (From Solarex/BP Solar, Frederick, MD

2.2.2 Main Operation:

Solar cell works in three steps:

Photons in sunlight hit the solar panel and are absorbed by semiconducting materials, such as silicon.

Electrons (negatively charged) are knocked loose from their atoms, allowing them to flow through the material to produce electricity. Due to the special composition of solar cells, the electrons are only allowed to move in a single direction. An array of solar cells converts solar energy into a usable amount of direct current (DC) electricity.

2.2.3 Equivalent Circuit::

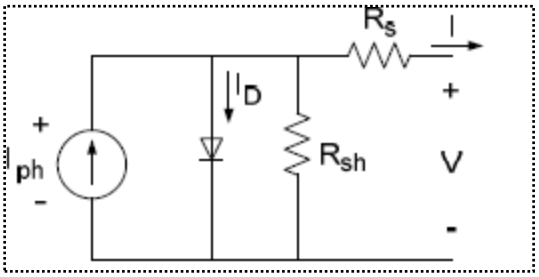

Fig 2.6:PV cell equivalent circuit

The complex physics of the PV cell can be represented by the equivalent electrical circuit. The circuit parameters are as follows. The current I at the output terminals is equal to the light-generated current I_L, less the diode current I_d and the shunt-leakage current I_{sh}. The series resistance R_s represents the internal resistance to the current flow, and depends on the pn junction depth, impurities, and contact resistance. The shunt resistance R_{sh} is inversely related to the leakage current to ground. In an ideal PV cell, $R_s = 0\Omega$ (no series loss), and $R_{sh} = \infty$(no leakage to ground). In a typical high-quality 1 in.2 silicon cell, Rs varies from 0.05 to 0.10 Ω and R_{sh} from 200 to 300 Ω. The PV conversion efficiency is sensitive to small variations in Rs, but is insensitive to variations in R_{sh}. A small increase in Rs can decrease the PV output significantly. In the equivalent circuit, the current delivered to the external load equals the current I_L generated by the illumination, less the diode current Id and the shunt leakage current I_{sh}. The open-circuit voltage Voc of the cell is obtained when the load current is zero, i.e., when I = 0, and is given by the following:

$$V_{oc}=V+IR_{sh}$$

The shunt resistance (R_{sh}) is very large and the series resistance (Rs) is very small. Therefore, it is common to neglect these resistances in order to simplify the solar cell model. The resultant ideal voltage-current characteristic of a photovoltaic cell is given by the relation below and illustrated by the figure above.

$$I=I_{ph}-I_D$$

$$I=I_{ph}-I_0\left[\exp\left(\frac{q(V+R_sI)}{Ak_BT}\right)-1\right]-\frac{V+R_sI}{R_{sh}}$$

Where,

I_{ph} = photocurrent,

I_D = diode current,

I_0 = saturation current,

A = ideality factor,

q = electronic charge $1.6x10^{-9}$,

k_B = Boltzmann's gas constant ($1.38x10^{-23}$),

T = cell temperature,

R_s = series resistance,

R_{sh} = shunt resistance,

I = cell current,

V = cell voltage

The power output of a solar cell is given by

$$P_{PV} = V_{PV} * I_{PV}$$

Where,

I_{PV} = Output current of solar cell (A).

V_{PV} = Solar cell operating voltage (V).

P_{PV} =Output power of solar cell (W).

The power-voltage (P-V) characteristic of a photovoltaic module operating at a standard irradiance of 1000 W/m^2 and temperature of 25°C is shown below.

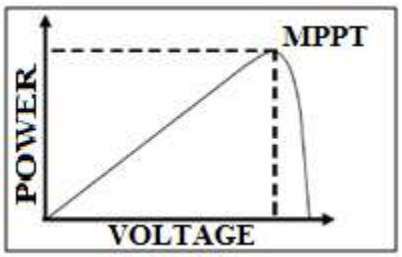

Fig 2.7: Power-Voltage (PV) Characteristic of a Photovoltaic Module.

It can be seen from the characteristics, that there is a unique point on the characteristics at which the photovoltaic power is maximum. This point is termed as the maximum power point (MPP). The power corresponding to this point is termed as power at maximum power point (P_{mpp}) and the voltage as voltage at maximum power point (V_{mpp}). Due to high cost of solar cells, it must be ensured that the photovoltaic array operates at all time to provide maximum power output. Hence a maximum power point tracker must be used to track the maximum power of the system. This is commonly known as maximum power point tracking (MPPT). Now if the irradiance level of the photovoltaic system is changed from the standard 1000 W/m^2 to say 600 W/m^2 or 400 W/m^2 then the P-V characteristic will change as shown in the figure below.

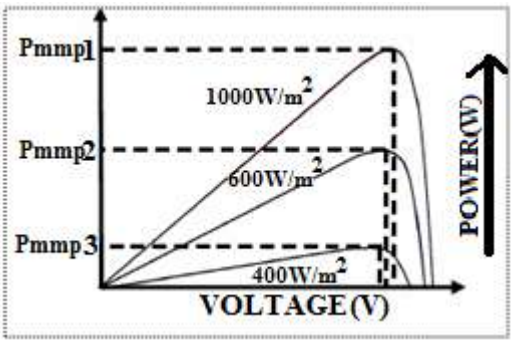

Fig 2.8: Variation of P-V Characteristics of Photovoltaic Module

The above graph shows that, the maximum power of the PV system also reduces accordingly. The maximum power point tracker must now track the new maximum power point for the changed irradiance level

SOLAR PANEL:

A solar panel (photovoltaic module or photovoltaic panel) is a packaged interconnected assembly of solar cells, also known as photovoltaic cells. The solar panel can be used as a component of a larger photovoltaic system to generate and supply electricity in commercial and residential applications.

Because a single solar panel can only produce a limited amount of power, many installations contain several panels. This is known as a photovoltaic array. A photovoltaic installation typically includes an array of solar panels, an inverter, batteries and interconnection wiring. Photovoltaic systems are used for either on- or off-grid applications, and on spacecraft.

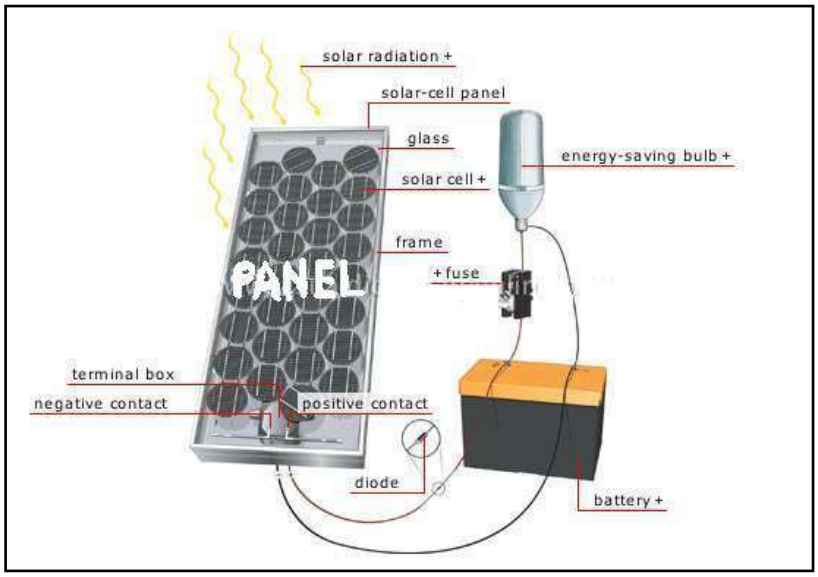

Fig 2.9: Solar Panel System

Working:

Solar panels use light energy (photons) from the sun to generate electricity through the photovoltaic effect. The structural (load carrying) member of a module can either be the top layer (superstrate) or the back layer (substrate). The majority of modules use wafer-based crystalline silicon cells or thin-film cells based on cadmium telluride or silicon. Crystalline silicon is a commonly used semiconductor. In order to use the cells in practical applications, they must be: connected electrically to one another and to the rest of the system protected from mechanical damage during manufacture, transport, installation and use (in particular against hail impact, wind and snow loads). This is especially important for wafer-based silicon cells which are brittle protected from moisture, which corrodes metal contacts and interconnections, and for thin-film cells the transparent conductive oxide layer, thus decreasing performance and lifetime. Most solar panels are rigid, but semi-flexible ones are available, based on thin-film cells. Electrical connections are made in series to achieve a desired output voltage and/or in parallel to provide a desired amount of current source capability. Separate diodes may be needed to avoid reverse currents, in case of partial or total shading, and at night. The p-n junctions of mono-crystalline silicon cells may have adequate reverse current characteristics that these are not necessary. Reverse currents are not only inefficient as they represent power losses, but they can also lead to problematic heating of shaded cells. Solar cells become less efficient at higher temperatures and so it desirable to minimize heat in the panels. Very few modules incorporate any design features to decrease temperature, but installers try to provide good ventilation behind solar panels.

Solar Trackers:

A solar tracker is a generic term used to describe devices that orient various payloads toward the sun. Payloads can be photovoltaic panels, reflectors, lenses or other optical devices.

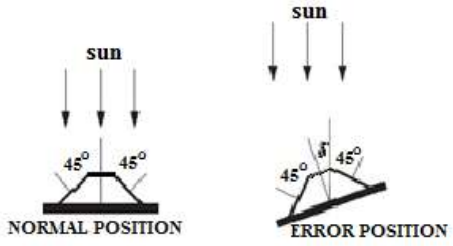

Fig 2.10: Sun-tracking actuator principle.

In standard photovoltaic (PV) applications trackers are used to minimize the angle of incidence between the incoming light and a photovoltaic panel. This increases the amount of energy produced from a fixed amount of installed power generating capacity. In standard photovoltaic applications, it is estimated that trackers are used in at least 85% of commercial installations greater than 1MW from 2009 to 2012. In concentrated photovoltaic (CPV) and concentrated solar thermal (CSP) applications trackers are used to enable the optical components in the CPV and CSP systems. The optics in concentrated solar applications accepts the direct component of sunlight light and therefore must be oriented appropriately to collect energy. Tracking systems are found in all concentrator applications because systems do not produce energy unless oriented toward the sun.

Major Components Of A Solar Panel:

Glass Cover- Provides protection from the elements .Anti-Reflective Coating - Substance used to prevent the light that strikes from bouncing off the panel. .Top Negative Contact - Negative Post (Terminal, like in your battery) .N-Type Layer - Semi-conductor layer dipped in phosphorus .P-Type Layer - Semi-conductor layer dipped in boron .Bottom Positive Contact - Positive Post (Terminal, like in a battery)

Open-Circuit Voltage and Short-Circuit Current:

The two most important parameters widely used for describing cell electrical performance are the open-circuit voltage *V*oc and the short-circuit current I_{sc} under full illumination. The short-circuit current is measured by shorting the output terminals and measuring the terminal current. Ignoring the small diode and ground leakage currents under zero terminal voltage, the short-circuit current under this condition is the photocurrent *I*L.

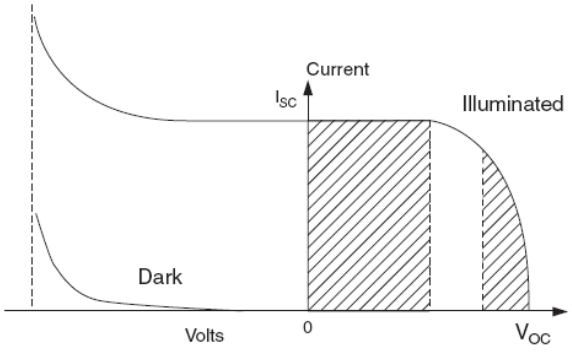

Fig 2.11: Current vs. voltage (I-V) characteristic of the PV module in sunlight and in the dark.

The maximum photo voltage is produced under the open-circuit voltage. Again, by ignoring the ground leakage current, Equation 9.3 with I = 0 gives the open circuit voltage as follows:

$$V_{oc}=\frac{AkT}{Q}\,Log_n\left(\frac{I_L}{I_D}+1\right)$$

The term kT/Q is expressed in voltage (0.026 V at 300□ K). In practical photocells, the photocurrent is several orders of magnitude greater than the reverse saturation current. Therefore, the open-circuit voltage is many times the kT/Q value. Under conditions of constant illumination, I_L/I_D is a sufficiently strong function of the cell temperature, and the solar cell ordinarily shows a negative temperature coefficient of the open-circuit voltage.

2.3 WORKING FACTORS OF PV ARRAY:

The major factors influencing the electrical design of the solar array are as follows:

Sun Intensity:

The magnitude of the photocurrent is maximum under a full bright sun (1.0 sun). On a partially sunny day, the photocurrent diminishes in direct proportion to the sun intensity. At a lower sun intensity, the I-V characteristic shifts downward. On a cloudy day, therefore, the short-circuit current decreases significantly. The reduction in the open-circuit voltage, however, is small. The photo conversion efficiency of the cell is insensitive to the solar radiation in the practical working range. For example, the analysis shows that the efficiency is practically the same at 500 W/m^2 and at 1000 W/m^2. This means that the conversion efficiency is the same on a bright sunny day as on a cloudy day. We get a lower power output on a cloudy day only because of the lower solar energy impinging on the cell.

Sun Angle:

The cell output current is given by $I = I_o\cos\theta$, where Io is the current with normal sun (reference), and θ□ is the angle of the sun line measured from the normal. This cosine law holds well for sun angles ranging from 0 to about 50^0. Beyond 50^0, the electrical output deviates significantly from the cosine law, and the cell generates no power beyond 85^0, although the mathematical cosine law predicts 7.5% power generation

Shadow Effect:

The array may consist of many parallel strings of series-connected cells. Two such strings are shown in figure. A large array may get partially shadowed due to a structure interfering with the sun line. If a cell in a long series string gets completely shadowed, it loses the photo voltage but still must carry the string current by virtue of its being in series with all other cells operating in full sunlight. Without internally generated voltage, the shadowed cell cannot produce power. Instead, it acts as a load, producing local I^2R loss and heat. The remaining cells in the string must work at higher voltage to make up the loss of the shadowed cell voltage.

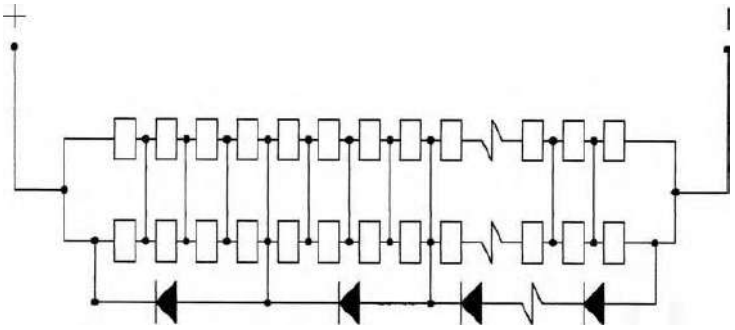

Fig 2.12: Bypass diode in PV string minimizes power loss under heavy shadow

A higher voltage in healthy cells means a lower string current as per the I-V characteristic of the string. The current loss is not proportional to the shadowed area, and may go unnoticed for a mild shadow on a small area. However, if more cells are shadowed beyond the critical limit, the I-V curve goes below the operating voltage of the string, making the string current fall to zero, losing all the power of the string. This causes loss of one whole string from the array.

Temperature Effects:

With increasing temperature, the short-circuit current of the cell increases, whereas the open-circuit voltage decreases. The effect of temperature on PV power is quantitatively evaluated by examining the effects on the current and the voltage separately. Suppose I_o and V_o are the short-circuit current and the open-circuit voltage at the reference temperature T, and □α□ and β □ are their respective temperature coefficients. If the operating temperature is increased by□Δα, then the new current and voltage are given by the following:

$$I_{sc}=I_o(1+\alpha.\Delta T) \text{ and } V_{oc}=V_o(1-\beta.\Delta T)$$

Because the operating current and the voltage change approximately in the same proportion as the short circuit current and open-circuit voltage, respectively, the new power is as follows:

$$P=VI=I_o(1+\alpha. .\Delta T)\ V_o(1-\beta.\Delta T)$$

This can be simplified in the following expression by ignoring a small term:

$$P=P_o[1+(\alpha -\beta.)\Delta T]$$

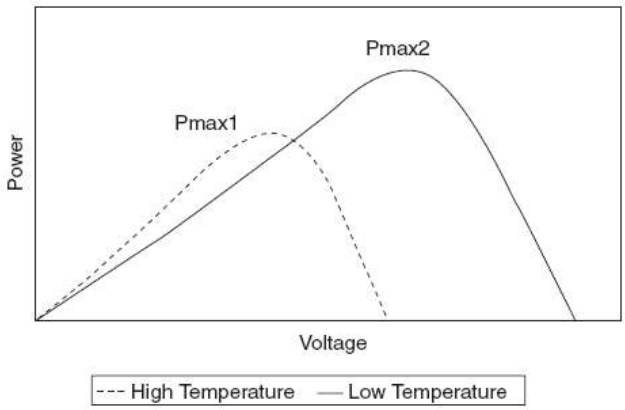

Fig 2.13: Effect of temperature on P-V characteristic

Effect of Climate:

On a partly cloudy day, the PV module can produce up to 80% of its full sun power. It can produce about 30% power even with heavy clouds on an extremely overcast day. Snow does not usually collect on the module, because it is angled to catch the sun. If snow does collect, it quickly melts. Mechanically, the module is designed to withstand golf-ball-size hail.

TABLE 2.1: Data for a flat-plate collector used for heating

FACTOR	SPECIFICATION
Location and Latitude	Coimbatore 11° 00' N
Day and Time	March 22, 14.30-15.30 (LST)
Average Intensity of solar radiation	560 W/m^2
Collector Tilt	26°
No. of glass cover	2
Heat Removal factor	0.82

Transmittance of glass	0.88
Absorptance of the plate	0.93
Top Loss coefficient (U_L)	7.95 W/m^2
Collector fluid temperature	75^oC
Ambient temperature	25^oC

CHAPTER-3
MULTILEVEL INVERTERS

3.1 Introduction:

Inverters have been developed over the last three decades for the purpose of meeting the drive high voltage rating and low dv/dt value requirements that could not be met by the classical two-level inverter. Until recently, power transistors were slow, and their long turn-on and off times resulted in excessive switching losses that constrained the switching frequency to several kHz values. Also the voltage blocking capability of power transistors was below a kilovolt that implied such switches could not be utilized in two-level inverters at high voltage levels and could not be operated at switching frequencies in the tens of kilohertz range.

3.1.1 Introduction GTO:

In the early 1980's utilizing darling ton power transistors and Gate Turn Off Thyristors (GTOs), the three-level NPC inverter could provide effectively quadrupled switching frequency and could provide high inverter voltage ratings (twice that of the two-level inverter). As a result, power and voltage levels above that of two-level inverter could be reached and the three-level NPC inverter has found immediate application in traction drives and industrial drives.

3.1.2 Introduction IGBT:

In the 1990's, the IGBT was introduced as a fast turn-on, fast turn-off device that provided significant switching loss reduction and also the secondary breakdown of the Bipolar Junction Transistor (BJT) was absent. As a result, IGBTs with higher switching frequencies and blocking voltages have extended the two-level inverter ratings to the kilovolt level and some of the three-level NPC inverter applications could be replaced with the two-level inverter. However, in particular in the 400 V and above voltage levels, the two-level inverter turned out to be problematic in terms of the dv /dt stresses during the fast switching of IGBTs. As a result, the NPC inverter has been favored again due to its reduced dv/dt rating compared to the two-level inverter. As a result at 400 V and above, when fast IGBTs are utilized it is presently favorable to utilize the three-level NPC inverter.

At the present time, as the power converter rating increases above a megawatt, which also implies a voltage rating above 400 V, the practical power converter topology is a multilevel inverter topology. In the lower megawatt range the three

levels NPC inverter and at the higher range the cascaded H-bridge topology have been in use in industry for longer than a decade.

Utility power electronics applications such as Static Compensator (STATCOM), Unified Power Flow Controller (UPFC), and Flexible AC Transmission System (FACTS) applications involve higher level inverters such as four, five or higher level NPC inverters and recently the flying capacitor topology has also been considered.

In the utility power electronics applications, multilevel inverters are required because the voltage levels involved are very high (kV range) and the required level can only be reached by either series connection of large number of power semiconductor or by means of multilevel inverter topologies involving large number of levels. At the 400 V distribution system level, generally the three-level inverter topology suffices.

3.2 TYPES OF Multilevel inverters:

In general, multilevel inverter topologies synthesize variable frequency variable voltage that is nearly sinusoidal output waveform with low dv/dt, reduced common mode voltage, and low harmonics yielding a motor friendly performance. Although the topology types are various, in all multilevel inverter topologies the basic idea is to utilize low voltage rating power transistors in series connection along with multistage DC capacitor voltage levels such that higher output voltage levels with small incremental steps could be obtained.

With high voltage waveform quality, the multilevel inverters result in negligible bearing current and decrease the effect of winding insulation breakdown in motor drives. Due to the reduced stresses and EMI, they provide better interface between DC voltage sources/loads and the AC utility grid when operated as PWM rectifiers and power conditioners.

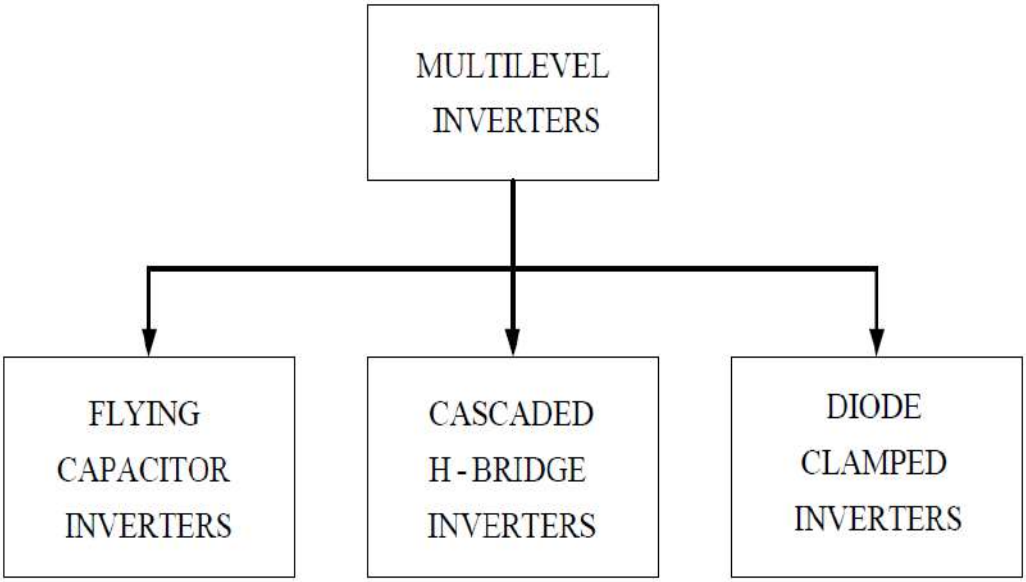

Fig: 3.1 multilevel inverter topologies.

In multilevel inverters, to increase the number of output voltage levels, the number of semiconductor devices and capacitor voltage sources should be increased. As a result, the power and control circuit of the multilevel inverter becomes more complex, large and costly. In addition, significant voltage imbalance problems arise. Therefore, with the three-level inverter being the most common, mainly up to five-level inverters has been reported. The topology option is more constrained than the number of levels. As illustrated in Figure 3.1, multilevel inverter technology involves three different topological structures.

3.2.1 FLYING CAPACITOR MULTILEVEL INVERTER TOPOLOGY:

The flying capacitor multilevel inverter topology was proposed in 1992. The flying capacitor topology is also called as "capacitor clamped multilevel inverter." Fig 3.2.a shows one phase leg of the three-level version of this topology and Fig 3.2.b shows corresponding output voltage waveform when switching at the fundamental frequency. The five-level flying capacitor inverter circuit topology and its output voltage waveform are shown in Fig 3.3.a and Fig 3.4.b, respectively. With all capacitor voltages being equal, in the three-level flying capacitor inverter, the output voltage V_{U0} has three different voltage levels –Vdc/2, 0, and +Vdc/2. For the voltage level +Vdc/2 the semiconductor switches SU1 and SU2 have to be turned ON. For the 0 level, semiconductor switches SU1 and SU3 or SU2 and SU4 need to be turned ON. For –Vdc/2, semiconductor switches SU3 and SU4 need to be turned ON. For the

five-level case the same strategy can be used to obtain five-level output voltage waveform.

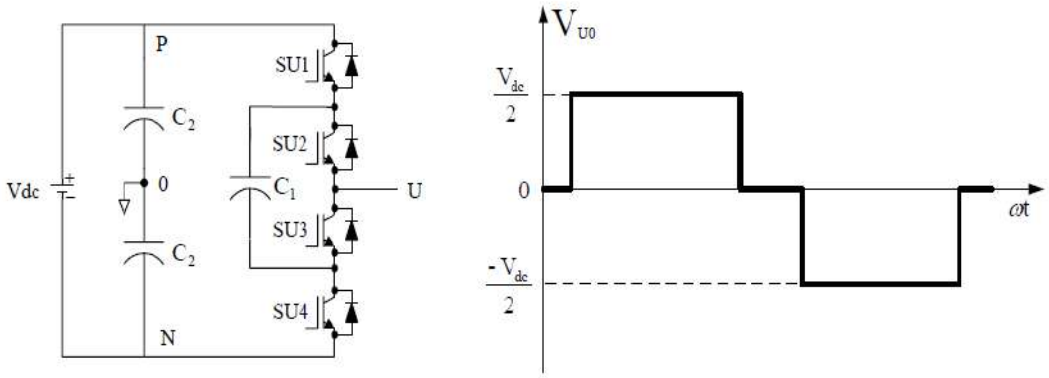

Fig: 3.2 Three-level flying capacitor inverter phase leg structure (a) and output voltage waveform (b).

The capacitor charge control method of the flying capacitor inverter topology is complex and the required control algorithm to maintain capacitor voltages within a specified range is involved. The flying capacitor topology requires larger capacitors (the flying capacitors) than the diode-clamped multilevel inverter DC bus capacitors. Therefore, the flying capacitor topology is not feasible for ASD systems and has mainly been considered for utility power electronics applications.

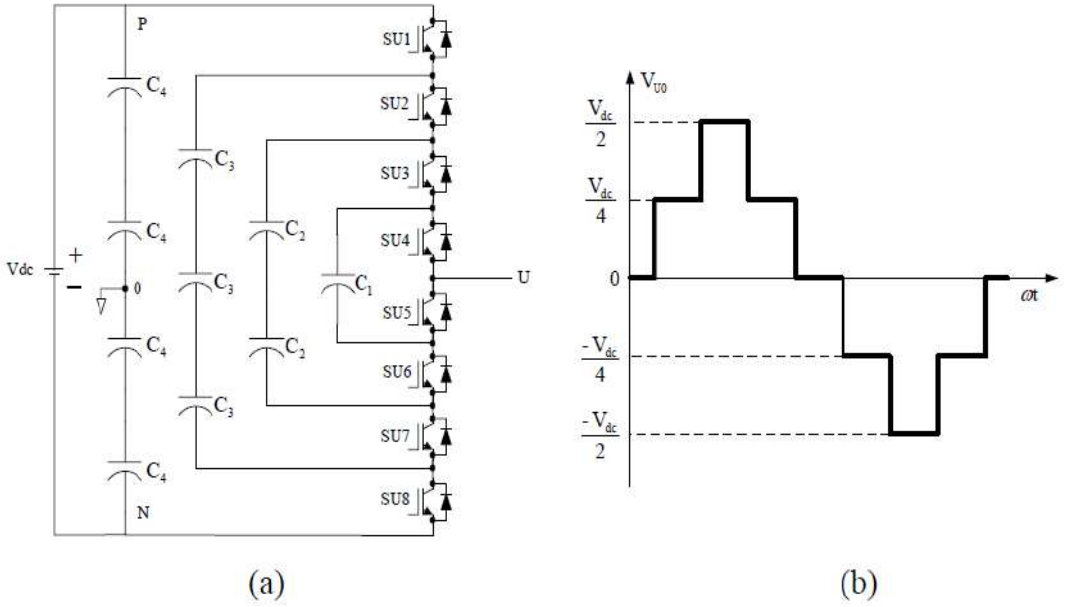

Fig: 3.3 Five-level flying capacitor inverter phase leg structure (a) and output voltage waveform (b).

3.2.2 CASCADED H-BRIDGE MULTILEVEL INVERTER TOPOLOGY:

In the cascaded H-bridge inverter topology, single phase H-bridge inverters with isolated (separate) DC sources are connected in series. Each such unit is called a cell. Figure 3.4.a shows one phase of the five-level cascaded H-bridge inverter topology and Figure 3.4.b shows the output voltage waveform. This topology has been utilized in industry for medium voltage motor drive applications. Each single-phase H-bridge inverter generates three voltage levels at the output: -Vdc, 0, and +Vdc. This is made possible by connecting the capacitors sequentially to the AC side via semiconductor switches. In the five-level cascaded inverter, two cells per-phase are connected in series as shown in Figure 3.4.a. Of the two cells of a phase, in each cell, the DC bus voltage can be different provided that in each phase the same level cell has the same voltage. Then various voltage step waveforms could be obtained. In the case that the voltage levels of all cells are the same, the analysis and synthesis becomes simple. In this case, depending on the output voltage of each cell, the phase output voltage can be one of the following discrete levels; 2Vdc, -Vdc, 0, +Vdc, +2Vdc.

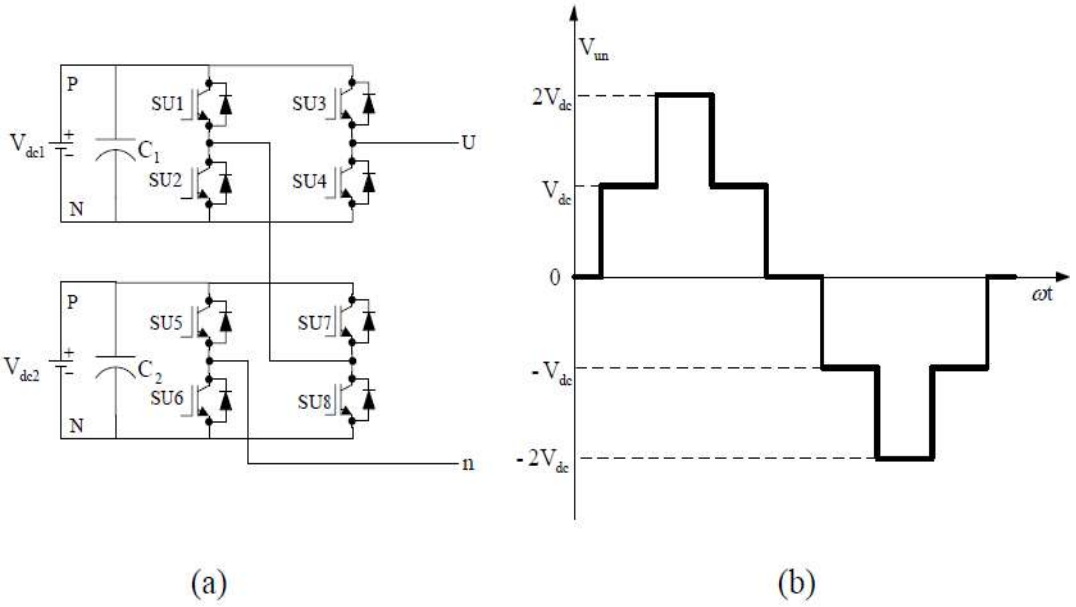

Fig: 3.4 the structure of one phase leg of the five-level cascaded multilevel inverter (a) and its output voltage waveform (b).

The cascaded H- bridge multilevel inverter topology has low harmonic content at the motor terminal voltages and low dv/dt rating. By selecting various DC bus voltage levels for various cells and also by selecting a sufficiently large cell count, it is possible to obtain high output voltage waveform quality even at very high voltage and power levels. The cascaded H-bridge inverter topology is fault tolerant. A fault in a single-phase inverter does not necessitate complete shutdown of the ASD system. This structure has modularity, and for this reason maintenance is easy. Isolated DC voltages could be provided via multi winding transformers and with appropriate rectifier and transformer design the drive AC input current waveform could be made of high quality yielding a utility line friendly performance. However, the cascaded H-bridge inverter topology involves a relatively large number of isolated H-bridge modules, a fairly large and complex input transformer, and moreover complex control circuitry. As a result, the topology is utilized in megawatt power rating motor drives. At power ratings below megawatt, the topology is prohibitive in terms of cost and complexity.

3.2.3 DIODE CLAMPED MULTILEVEL INVERTERS:

As the first practical multilevel inverter topology, the three-level neutral point clamped (NPC) voltage source inverter was invented by Nabae, et al, in 1980. Figure 3.5.a shows one phase leg of this topology and Figure 3.5.b shows its output voltage waveform. The NPC inverter is also called as the "Three-Level Diode Clamped" NPC inverter. In the topology, the DC bus voltage must be split in two via series connected capacitor banks. In the three-level inverter, the output voltage V_{U0} has three levels; -V_{dc}/2, 0, and +V_{dc}/2. For +V_{dc}/2 semiconductor switches S_{U1} and S_{U2} are turned ON. For 0 output voltage, semiconductor switches S_{U2} and S_{U3} are turned ON. And for -V_{dc}/2 semiconductor switches S_{U3} and S_{U4} are turned ON. The semiconductor switches (SU1, SU3) and (SU2, SU4) are turned ON and OFF in complementary logic. The clamping diodes DU1 and DU2 clamp the semiconductor switch voltage to half of the DC bus voltage.

In three-phase inverter, the NPC inverter phase output voltage levels and the line-to-line output voltage levels are related with the 2n-1 relation. The number of voltage levels of the line to line output voltage waveform is 2n-1, where n is the number of the phase voltage output levels. Therefore, for the three17 level NPC inverter case line-to-line output voltage consists of five different voltage levels. The

three-level NPC inverter structure was originally developed for the purpose of increasing the power ratings of power converters (to megawatt levels) without paralleling or in series connecting converter modules or semiconductor devices. Since its invention the NPC inverter has found place in significant number of applications involving high voltage and/or power ratings

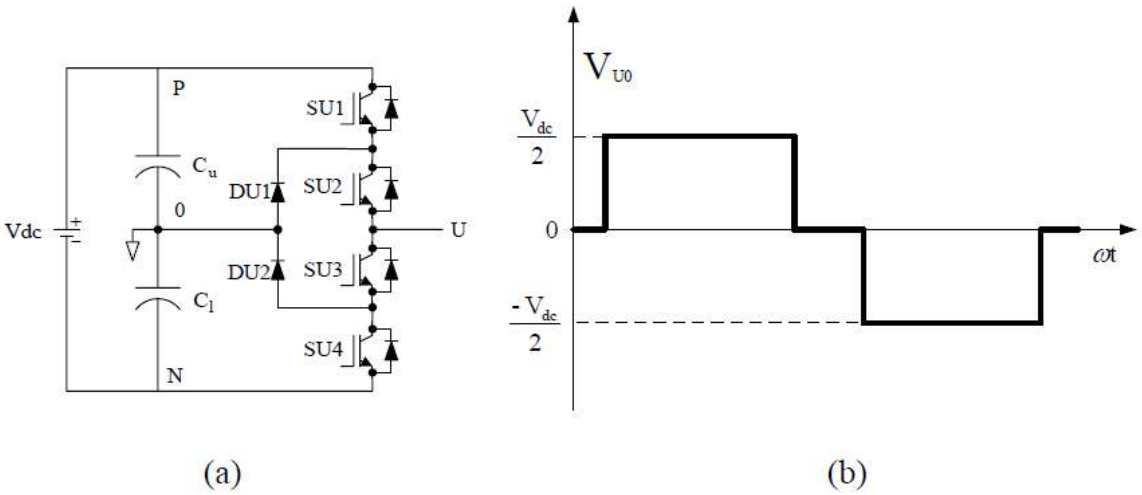

Fig: 3.5. The three-level diode clamped inverter phase leg structure (a) and output voltage waveform (b).

Although the early applications involved niche areas such as railway drives, presently the utilization has spread to the general purpose ASD area. The three-level diode clamped inverter (NPC) inverter has been utilized in 400 V and above voltage ratings in the power range from a few kilowatts to megawatt. This wide range places the three-level NPC inverter in a special place among all the multilevel inverter topologies. Similar to the flying capacitor topology, the three-level NPC inverter topology also has the drawback of capacitor voltage variation. In the three-level NPC inverter the neutral point (connection point of the two DC bus capacitors) potential may drift or vary and countermeasures must be taken when employing this topology.

3.3 Cascaded Multilevel Inverters:

The smallest number of voltage levels for a multilevel inverter using cascaded inverter with SDCSs is three. To achieve a three-level waveform, a single full-bridge inverter is employed. Basically, a full-bridge inverter is known as an H-bridge cell, which is illustrated in Fig. 3.6. The inverter circuit consists of four main switches and four freewheeling diodes.

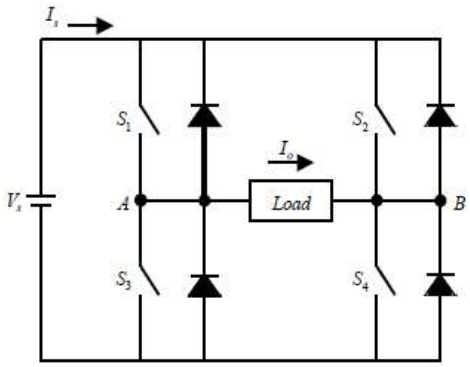

Figure 3.6 An H-bridge cell.

3.3.1 Gate Signal and Inverter Operation:

According to four-switch combination, three output voltage levels, +V, -V, and 0, can be synthesized for the voltage across A and B. During inverter operation shown in Fig. 3.6, switch of S1 and S4 are closed at the same time to provide V_{AB} a positive value and a current path for Io. Switch S2 and S4 are turned on to provide V_{AB} a negative value with a path for Io. Depending on the load current angle, the current may flow through the main switch or the freewheeling diodes. When all switches are turned off, the current will flow through the freewheeling diodes.

In case of zero level, there are two possible switching patterns to synthesize zero level, for example, 1) S1 and S2 on, S3 and S4 off, and 2) S1 and S2 off and S3 and S4 on. A simple gate signal, repeated zero-level patterns, is shown in Fig. 3.7. All zero levels are generated by turning on S1 and S2.

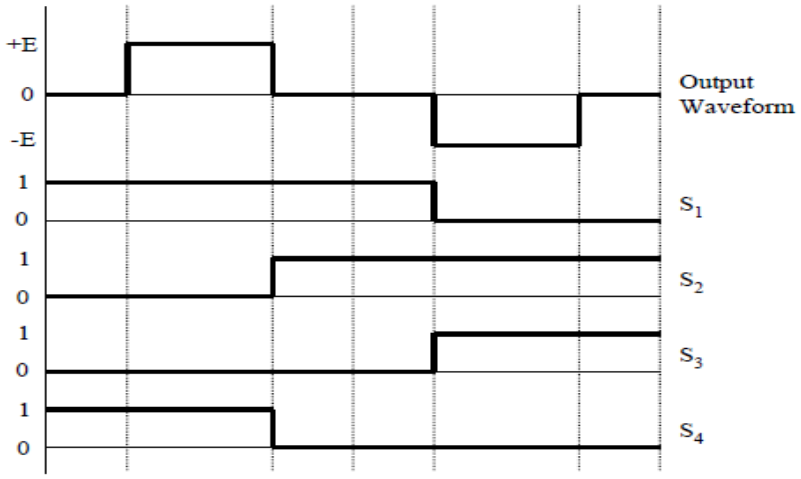

Figure 3.7 Repeated zero-level switching pattern1

Note that level 1 represents the state when the gate is turned on, and level 0 represents the state when the gate is turned off. In Fig. 3.6, S1 and S2 are turned on longer than S3 and S4 do in each cycle because the same zero level switching pattern is used. As a result, S1 and S2 are consuming more power and getting higher temperature than the other two switches. To avoid such a problem, a different switching pattern for zero level is applied. In the first zero stage, S1 and S2 are turned on; then, in the second zero stage, S3 and S4 are turned on instead of S1 and S2. By applying this method, turn-on time for each switch turns out to be equal, a shown in Fig. 3.8. This switching pattern will be used for experimental verification in this thesis.

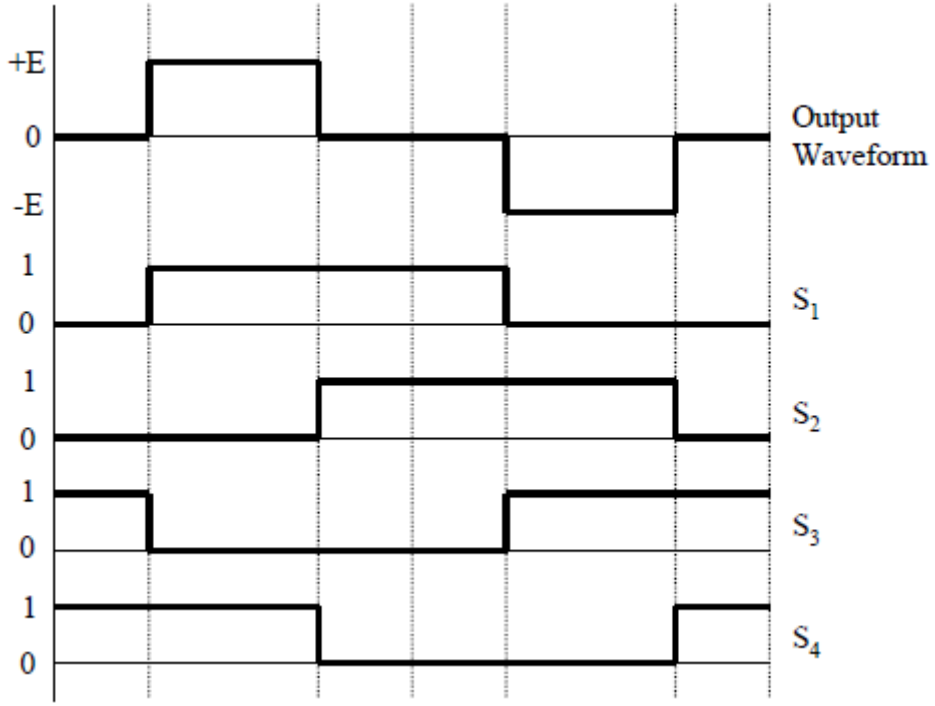

Figure: 3.8 Swapped zero-level switching pattern

3.3.2 Blanking Time:

Another issue that has to be concerned is providing blanking time for gate signal. In the switches were assumed to be ideal, which allowed the state of the two switches in an inverter leg to change simultaneously from on to off and vice versa. In practice, switching devices are not ideal. To completely turn-off the devices, a short period, which depends on the type of the device, is needed. Usually, because of the

finite turn-off and turn-on times associated with any types of switch, a switch is turned off at the switching time instant. However, the turn-on of the other switching in that inverter leg is delayed by a blanking time, t_D, which is conservatively chosen to avoid cross conduction current through the leg. A blanking time concept is illustrated in Fig 3.9. The leg of S1 and S3 are used as an example.

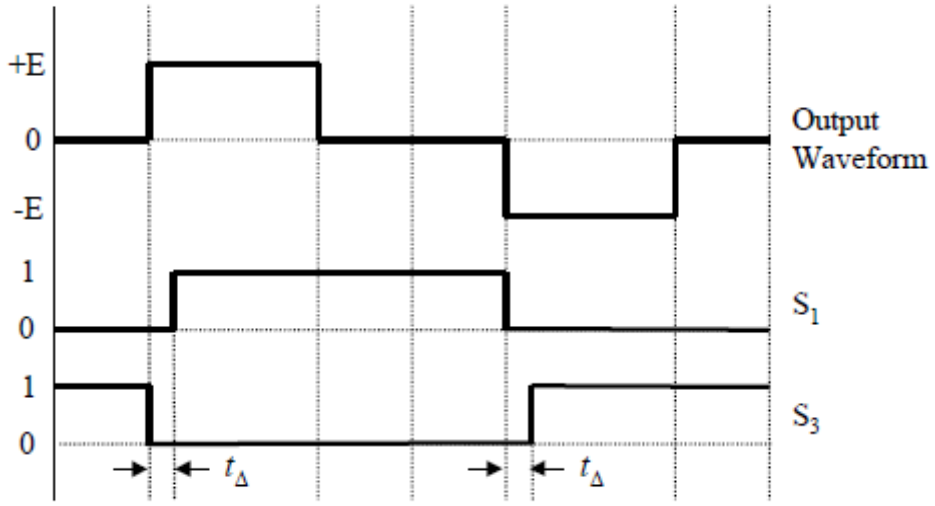

Figure: 3.9 Apply blanking time to the gate signal.

3.4 Cascade Inverter Configuration:

3.4.1 Single-Phase Structure:

To synthesize a multilevel waveform, the ac output of each of the different level H-bridge cells is connected in series. The synthesized voltage waveform is, therefore, the sum of the inverter outputs. The number of output phase voltage levels in a cascaded inverter is defined by

$$m = 2s + 1 \quad \text{where } s \text{ is the number of dc sources} \qquad \text{.... (3.1)}$$

For example, a nine-level output phase voltage waveform can be obtained with four-separated dc sources and four H-bridge cells. Fig 3.10 shows a general single-phase *m*-level cascaded inverter.

From Fig. 3.10, the phase voltage is the sum of each H-bridge outputs and is given as

$$V_{AN} = V_{dc1} + V_{dc2} + \ldots + V_{dc(s-1)} + V_{dcs} \qquad \ldots.(3.2)$$

Because zero voltage is common for all inverter outputs, the total level of output voltage waveform becomes 2*s*+1. An example phase voltage waveform for a

nine-level cascaded inverter and all H-bridge cell output waveforms are shown in Fig. 3.11. In this thesis, all dc voltage is assumed to be equal, i.e., $V_{dc1} = V_{dc2} = \ldots = V_{dc(S-1)} = V_{dc}S$

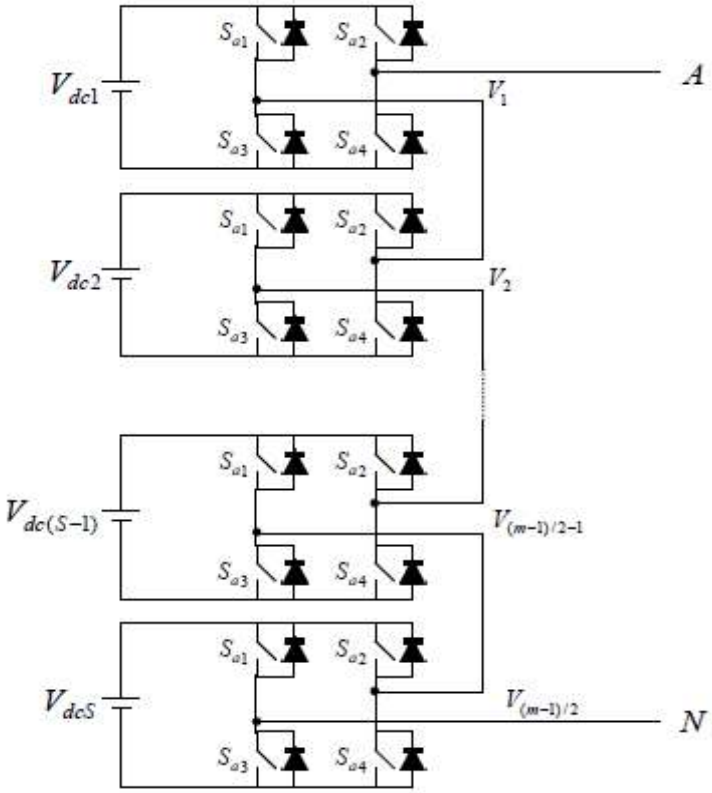

Figure 3.10 Single-phase configuration of an m-level cascaded inverter.

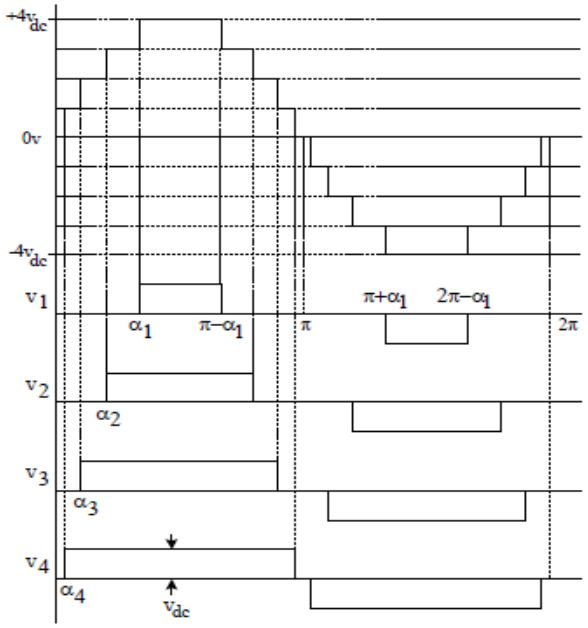

Figure 3.11 Waveform showing a nine-level output phase voltage and each H-bridge output voltage.

According to sinusoidal-liked waveform, each H-bridge output waveform must be quarter-symmetric as illustrated by V1 waveform in Fig. 3.11. Obviously, no even harmonic components are available in such a waveform. To minimize THD, all switching angles will be numerically calculated, which will be proposed.

3.4.2 Three-Phase Structure:

For a three-phase system, the output of three identical structure of single-phase cascaded inverter can be connected in either wye or delta configuration. Fig 3.12 illustrates the schematic diagram of wye-connected seven-level inverter using three H-bridge cells and three SDCSs per phase, which will be used to verify the concept of the optimized harmonic stepped-waveform technique.

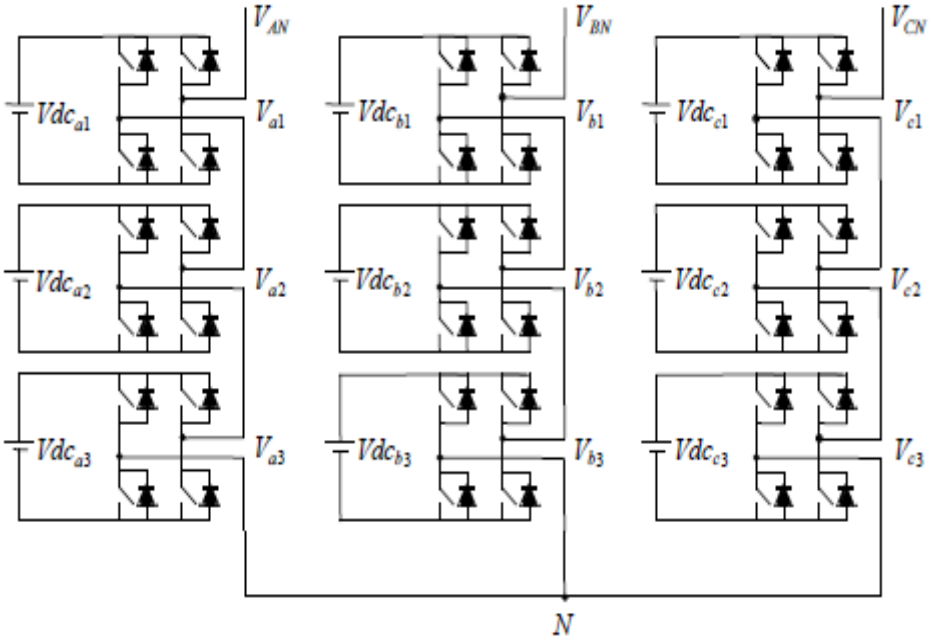

Figure:3.12 Three-phase seven-level inverter using cascaded-inverters with SDCSs.

From Fig 3.12, V_{AN} is voltage of phase A, which is the sum of V_{a1}, V_{a2}, and V_{a3}. The same idea is applied to phase B and phase C. To synthesize seven-level phase voltage, three firing angles are required. The same three switching angles can be used in all three phase with delaying 0, 120, and 240 electrical degree for phase A, B, and C, respectively.

According to three-phase theory, line voltage can be expressed in term of two phase voltages. For example, the potential between phase A and B is so-called V_{AB}, which can be written as follows:

$$V_{AB} = V_{AN} - V_{BN} \quad \text{.....(3.3)}$$

Where

V_{AB} is line voltage

V_{AN} is voltage of phase A with respect to point N

V_{BN} is voltage of phase B with respect to point N

Theoretically, the maximum number of line voltage levels is 2m-1, where m is the number of phase voltage levels. The number of line voltage level depends on the modulation index and the given harmonics to be eliminated. The seven-level cascaded inverter, for example, can synthesize up to thirteen-level line voltage.

The advantage of three-phase system is that all triplen harmonic components in the line voltage will be eliminated by one-third cycle phase shift feature. Therefore, only non-triplen harmonic components need to be eliminated from phase voltage. In single phase nine-level waveform, for example, the 3rd, 5th, and 7th harmonics will be eliminated from output phase voltage. Compared to single-phase inverter, in three-phase nine-level inverter, the 5th, 7th, and 11th harmonics will be eliminated from output phase voltage. Thus, the 9th harmonic is the lowest harmonic component in phase voltage in single phase system, while the 13th harmonic is the lowest harmonic component appearing in line voltage of three-phase system.

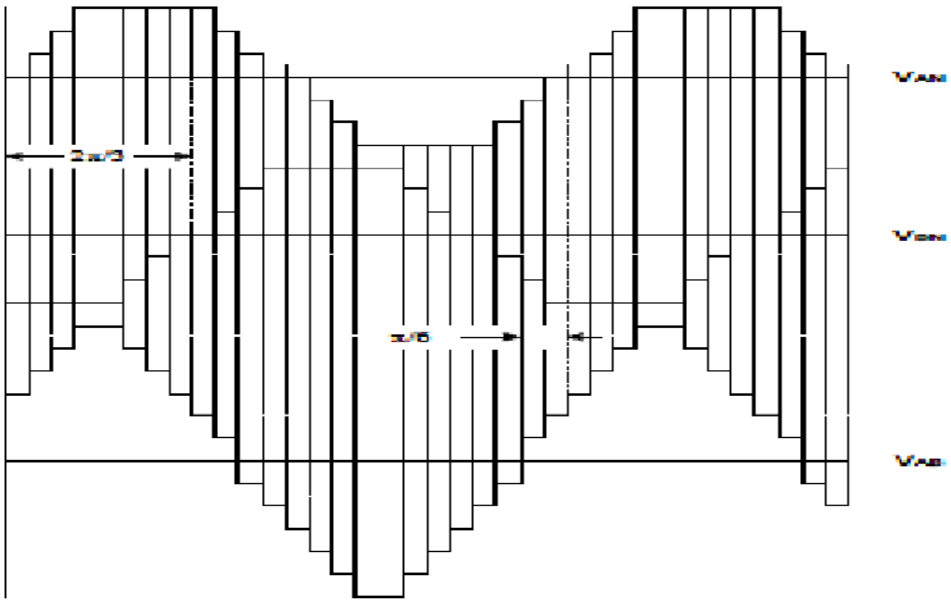

Figure 3.13 Two phase and line voltages of three-phase seven-level cascaded inverter in Fig. 3.12.

Fig 3.13 shows output voltage of phase A, V_{AN}, and output voltage of phase B, V_{BN}, line voltage waveform, V_{AB} of seven-level cascaded inverter in Fig 3.12.

From Fig. 3.13, assuming the positive sequence three-phase system, output voltage of phase B lags output voltage of phase A by 120 electrical degree. The line voltage, V_{AB}, therefore, leads voltage of phase A by 30 electrical degree, which is according to the three-phase theory.

3.4.3 Separated DC Sources (SDCSs):

To avoid short circuit of dc sources, the separated dc source configuration is applied to the multilevel inverter using cascaded-inverter. This section will discuss about why cascaded inverter have to employ the separated dc sources (SDCSs). To explain this, two possible dc sources connections are assumed. In the first case, all H-bridge cells in the same leg share the same dc source. Another connection is that the same dc source is shared in the same level of each phase. Fig. 3.14(a) and 3.14(b) illustrate the first connection and the second connection of five-level cascaded inverter, respectively.

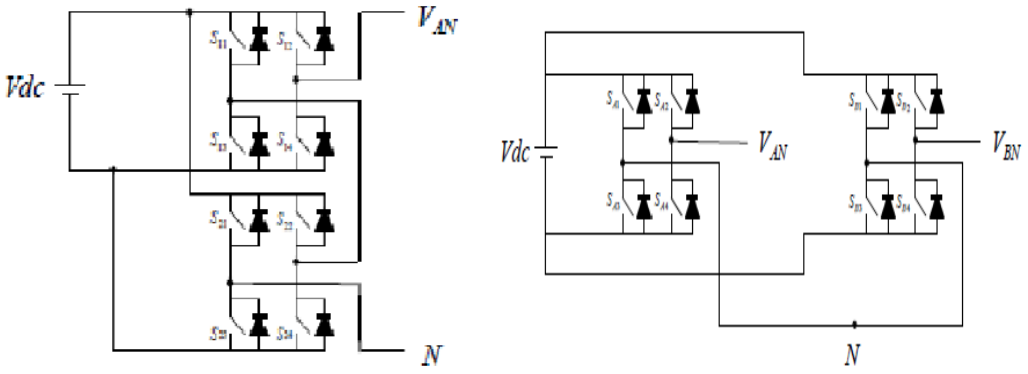

(a) (b)

Figure 3.14 shows two possible dc source connections

To avoid confusing, both cases will be assumed that no self shoot-through described in 1.2 is possible. However, there are many combinations, which make short circuit happen. Therefore, one possibility of each case will be presented. In the first case, short circuit across the dc source exists when switches S_{11} and S_{24} are turned on simultaneously, which is illustrated in Fig. 3.15(a). Likewise, in the second connection, when switch S_{A1} and S_{B3} are on at the same time, which is shown in Fig. 3.15(b), short circuit will be happened.

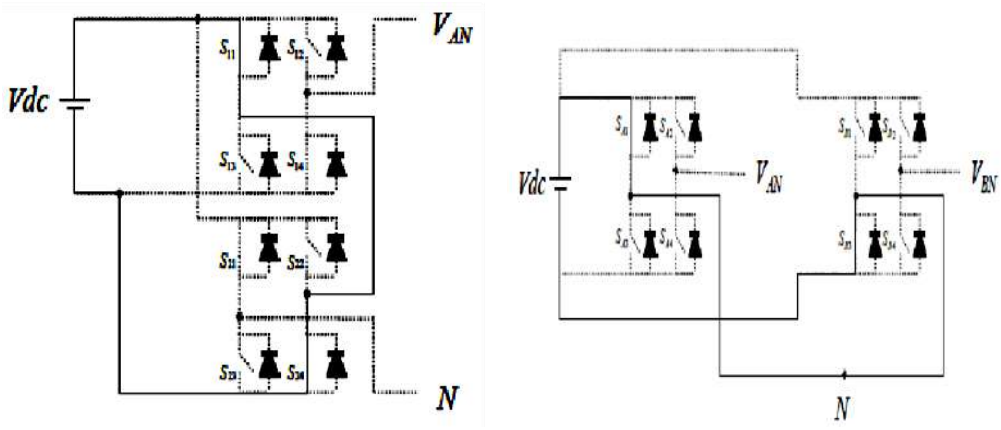

(a) (b)

Figure 3.15 shows a short circuit possibility of each case.

CHAPTER-4
PROPOSED SYSTEM

4.1 Circuit Configuration:

Figure 1 shows the configuration of the proposed solar power generation system. The proposed solar power generation system is composed of a solar cell array, a DC-DC power converter and a new seven-level inverter. The solar cell array is connected to the DC-DC power converter, and the DC-DC power converter is a boost converter that incorporates a transformer with a turn ratio of 2:1. The DC-DC power converter converts the output power of the solar cell array into two independent voltage sources with multiple relationships, which supply the seven-level inverter. This new seven-level inverter is composed of a capacitor selection circuit and a full-bridge power converter, connected in cascade.

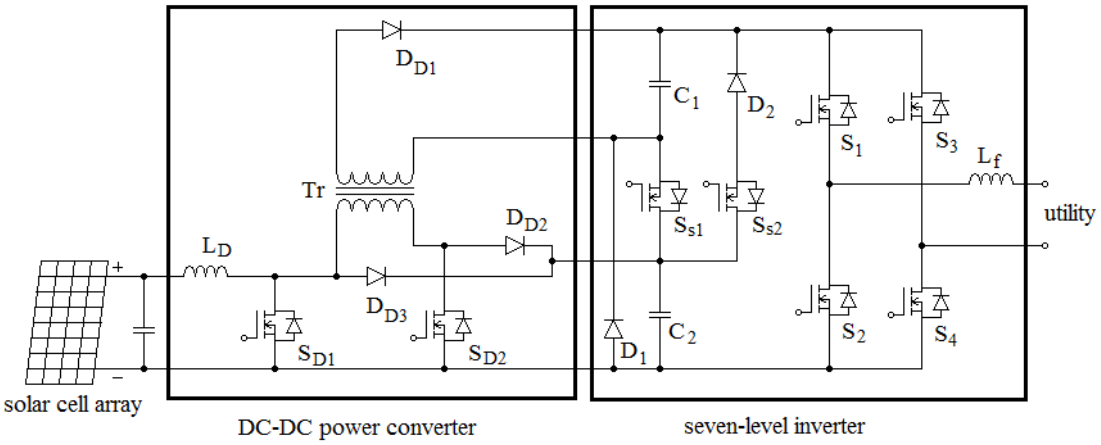

Fig. 4.1: configuration of the proposed solar power generation system

The power electronic switches of capacitor selection circuit determine the discharge of the two capacitors while the two capacitors are being discharged individually or in series. Because of the multiple relationships between the voltages of the DC capacitors, the capacitor selection circuit outputs a three-level DC voltage. The full-bridge power converter further converts this three-level DC voltage to a seven-level AC voltage that is synchronized with the utility voltage. In this way, the proposed solar power generation system generates a sinusoidal output current that is in phase with the utility voltage and is fed into the utility, which produces a unity

power factor. As can be seen, this new seven-level inverter contains only six power electronic switches, so the power circuit is simplified.

4.2 DC-DC Power Converter:

As seen in Fig. 1, the DC-DC power converter incorporates a boost converter and a current-fed forward converter. The boost converter is composed of an inductor, LD, a power electronic switch, SD1, and a diode, DD3. The boost converter charges capacitor C2 of the seven-level inverter. The current-fed forward converter is composed of an inductor, LD, power electronic switches, SD1 and SD2, a transformer and diodes, DD1 and DD2. The current-fed forward converter charges capacitor C1 of the seven-level inverter. The inductor, LD, and the power electronic switch, SD1, of the current-fed forward converter are also used in the boost converter.

Figure 2(a) shows the operating circuit of the DC-DC power converter when SD1 is turned on. The solar cell array supplies energy to the inductor LD. When SD1 is turned off and SD2 is turned on, its operating circuit is shown in Fig. 2(b). Accordingly, capacitor C1 is connected to capacitor C2 in parallel through the transformer, so the energy of inductor LD and the solar cell array charge capacitor C2 through DD3 and charge capacitor C1 through the transformer and DD1 during the off-state of SD1. Since capacitors C1 and C2 are charged in parallel by using the transformer, the voltage ratio of capacitors C1 and C2 is the same as the turn ratio (2:1) of the transformer. Therefore, the voltages of C1 and C2 have multiple relationships. The boost converter is operated in the continuous conduction mode (CCM). The voltage of C2 can be represented as:

$$V_{c2} = \frac{1}{1-D} V_s \qquad (1)$$

where VS is the output voltage of solar cell array and D is the duty ratio of SD1. The voltage of capacitor C1 can be represented as:

$$V_{c1} = \frac{1}{2(1-D)} V_s \qquad (2)$$

It should be noted that the current of the magnetizing inductance of the transformer increases when SD2 is in the on state. Conventionally, the forward converter needs a third demagnetizing winding in order to release the energy stored in the magnetizing inductance back to the power source. However, in the proposed DC-DC power converter the energy stored in the magnetizing inductance is delivered to

capacitor C2 through DD2 and SD1 when SD2 is turned off. Since the energy stored in the magnetizing inductance is transferred forward to the output capacitor C2 and not back to the dc source, the power efficiency is improved. In addition, the power circuit is simplified because the charging circuits for capacitors C1 and C2 are integrated. Capacitors C1 and C2 are charged in parallel by using the transformer, so their voltages automatically have multiple relationships. The control circuit is also simplified.

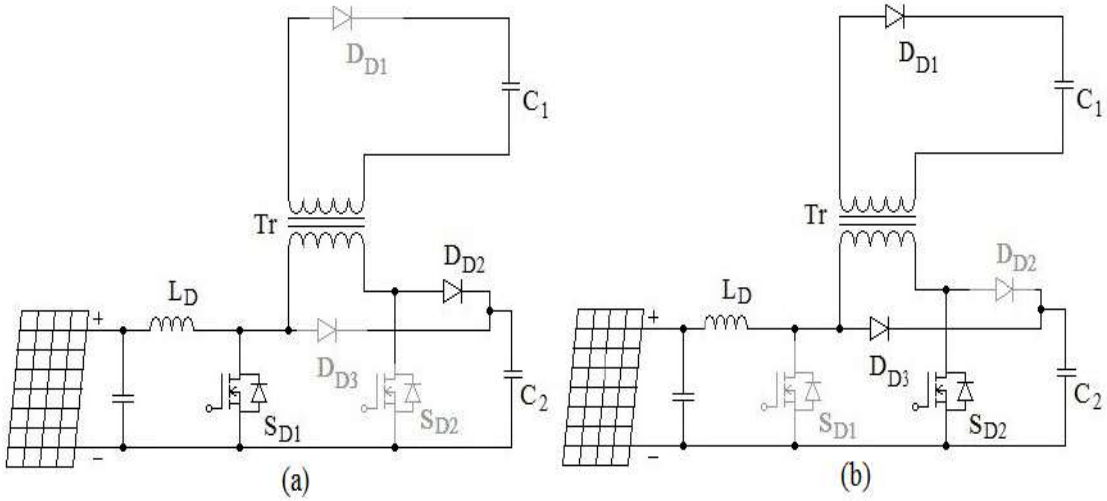

Fig. 4.2: operation of DC-DC power converter, (a) SD1 is on, (b) SD1 is off

4.3 Seven-Level Inverter:

As seen in Fig. 1, the seven-level inverter is composed of a capacitor selection circuit and a full-bridge power converter, which are connected in cascade. Operation of the seven-level inverter can be divided into the positive half cycle and the negative half cycle of the utility. For ease of analysis, the power electronic switches and diodes are assumed to be ideal, while the voltages of both capacitors C1 and C2 in the capacitor selection circuit are constant and equal to Vdc/3 and 2Vdc/3, respectively.

Since the output current of the solar power generation system will be controlled to be sinusoidal and in phase with the utility voltage, the output current of the seven-level inverter is also positive in the positive half cycle of the utility. The operation of the seven-level inverter in the positive half cycle of the utility can be further divided into four modes, as shown in Fig.3.

Mode 1:

The operation of mode 1 is shown in Fig. 3(a). Both SS1 and SS2 of the capacitor selection circuit are off, so C1 is discharged through D1 and the output voltage of the capacitor selection circuit is Vdc/3. S1 and S4 of the full-bridge power converter are on. At this point, the output voltage of the seven-level inverter is directly equal to the output voltage of the capacitor selection circuit, which means the output voltage of the seven-level inverter is Vdc/3.

Mode 2:

The operation of mode 2 is shown in Fig. 3(b). In the capacitor selection circuit, SS1 is off and SS2 is on, so C2 is discharged through SS2 and D2 and the output voltage of the capacitor selection circuit is 2Vdc/3. S1 and S4 of the full-bridge power converter are on. At this point, the output voltage of the seven-level inverter is 2Vdc/3.

Mode 3:

The operation of mode 3 is shown in Fig. 3(c). In the capacitor selection circuit, SS1 is on. Since D2 has a reverse bias when SS1 is on, the state of SS2 cannot affect the current flow. Therefore, SS2 may be on or off, to avoiding switching of SS2. Both C1 and C2 are discharged in series and the output voltage of the capacitor selection circuit is Vdc. S1 and S4 of the full-bridge power converter are on. At this point, the output voltage of the seven-level inverter is Vdc.

Mode 4:

The operation of mode 4 is shown in Fig. 3(d). Both SS1 and SS2 of the capacitor selection circuit are off. The output voltage of the capacitor selection circuit is Vdc/3. Only S4 of the full-bridge power converter is on. Since the output current of the seven-level inverter is positive and passes through the filter inductor, it forces the anti-parallel diode of S2 to be switched on for continuous conduction of the filter inductor current. At this point, the output voltage of the seven-level inverter is zero.

Therefore, in the positive half cycle, the output voltage of the seven-level inverter has four levels: Vdc, 2Vdc/3, Vdc/3 and 0.

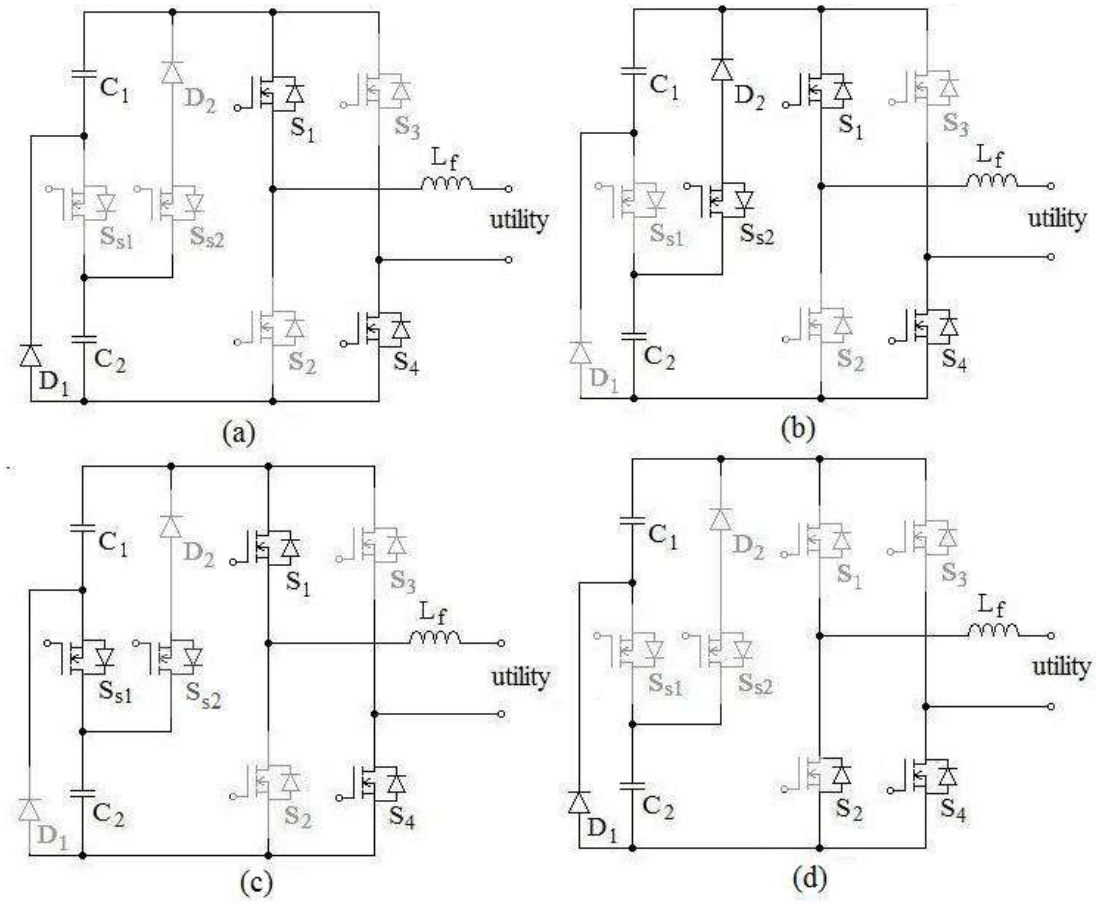

Fig. 4.3: operation of seven-level inverter in the positive half cycle, (a) mode 1, (b) mode 2, (c) mode 3, (d) mode 4

In the negative half cycle, the output current of the seven-level inverter is negative. The operation of the seven-level inverter can also be further divided into four modes, as shown in Fig.4. A comparison with Fig. 3 shows that the operation of the capacitor selection circuit in the negative half cycle is the same as that in the positive half cycle. The difference is that S2 and S3 of the full-bridge power converter are on during modes 5, 6 and 7, and S2 is also on during mode 8 of the negative half cycle. Accordingly, the output voltage of the capacitor selection circuit is inverted by the full-bridge power converter, so the output voltage of the seven-level inverter also has four levels: -Vdc, -2Vdc/3, -Vdc/3 and 0.

In summary, the output voltage of the seven-level inverter has the voltage levels: Vdc, 2Vdc/3, Vdc/3, 0, -Vdc/3, -2Vdc/3 and -Vdc.

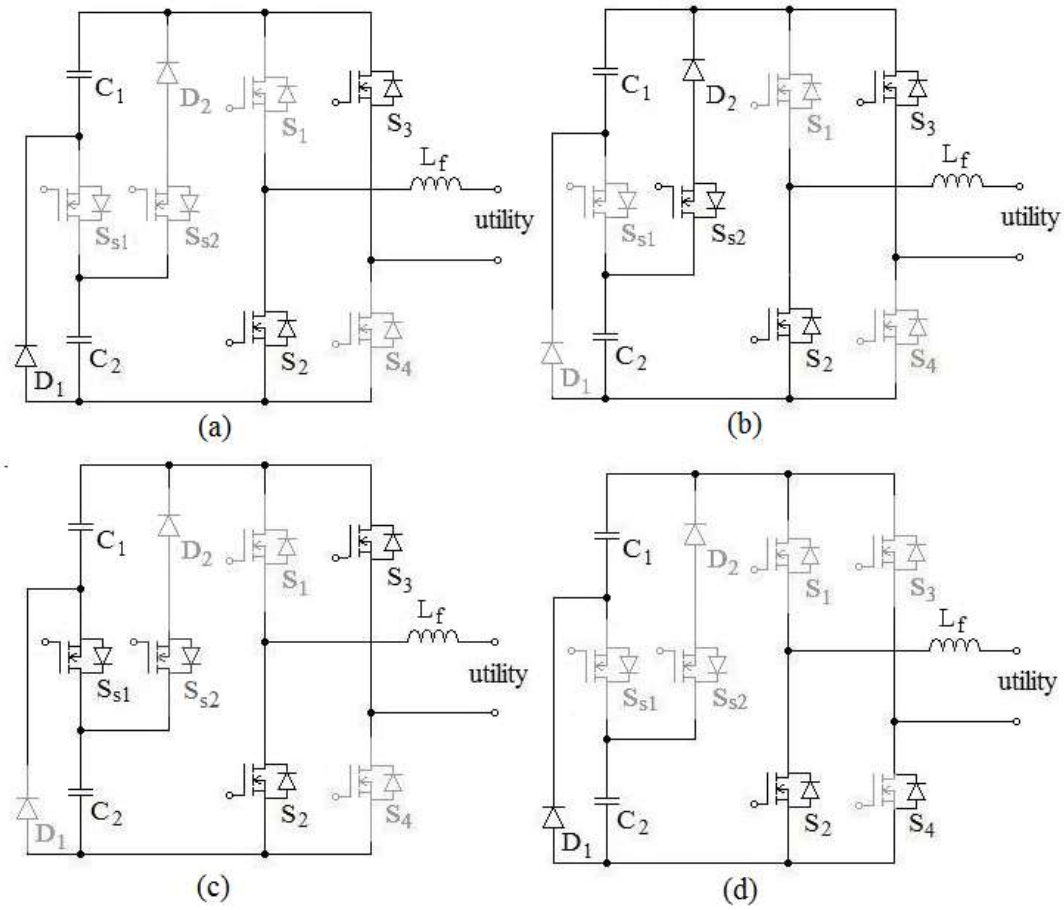

Fig. 4.4: operation of seven-level inverter in the negative half cycle, (a) mode 5, (b) mode 6, (c) mode 7, (d) mode 8.

The seven-level inverter is controlled by the current-mode control, and pulse-width modulation (PWM) is use to generate the control signal for the power electronic switch. The output voltage of the seven-level inverter must be switched in two levels, according to the utility voltage. One level of the output voltage is higher than the utility voltage in order to increase the filter inductor current, and the other level of the output voltage is lower than the utility voltage, in order to decrease the filter inductor current. In this way, the output current of the seven-level inverter can be controlled to trace a reference current. Accordingly, the output voltage of the seven-level inverter must be changed in accordance with the utility voltage.

In the positive half cycle, when the utility voltage is smaller than Vdc/3, the seven-level inverter must be switched between modes 1 and 4 to output a voltage of

Vdc/3 or 0. Within this voltage range, S1 is switched in PWM. The duty ratio d of S1 can be represented as:

$$d = v_m / V_{tri} \quad (3)$$

where Vm and Vtri are the modulation signal and the amplitude of carrier signal in the PWM circuit, respectively. The output voltage of the seven-level inverter can be written as:

$$v_o = d \cdot V_{dc} / 3 = k_{pwm} v_m \quad (4)$$

where kpwm is the gain of inverter, which can be written as:

$$k_{pwm} = V_{dc} / 3V_{tri} \quad (5)$$

Figure 5(a) shows the simplified model for the seven-level inverter when the utility voltage is smaller than Vdc/3. The closed-loop transfer function can be derived as:

$$I_o = \frac{k_{pwm} G_c / L_f}{s + k_i k_{pwm} G_c / L_f} I_o^* - \frac{1 / L_f}{s + k_i k_{pwm} G_c / L_f} V_u \quad (6)$$

where Gc is the current controller and ki is the gain of the current detector.

The seven-level inverter is switched between modes 2 and 1, in order to output a voltage of 2Vdc/3 or Vdc/3 when the utility voltage is in the range (Vdc/3, 2Vdc/3). Within this voltage range, SS2 is switched in PWM. The duty ratio of SS2 is the same as (3). However, the output voltage of seven-level inverter can be written as:

$$v_o = d \cdot V_{dc} / 3 + V_{dc} / 3 = k_{pwm} v_m + V_{dc} / 3 \quad (7)$$

Figure 5(b) shows the simplified model for the seven-level inverter when the utility voltage is within this voltage range. The closed-loop transfer function can be derived as:

$$I_o = \frac{k_{pwm} G_c / L_f}{s + k_i k_{pwm} G_c / L_f} I_o^* - \frac{1 / L_f}{s + k_i k_{pwm} G_c / L_f} (V_u - V_{dc} / 3) \quad (8)$$

The seven-level inverter is switched between modes 3 and 2 in order to output a voltage of Vdc or 2Vdc/3 when the utility voltage is in the range (2Vdc/3, Vdc).

Within this voltage range, SS1 is switched in PWM and SS2 remains in the on state to avoid switching of SS2. The duty ratio of SS1 is the same as (3). However, the output voltage of seven-level inverter can be written as:

$$v_o = d \cdot V_{dc}/3 + 2V_{dc}/3 = k_{pwm} v_m + 2V_{dc}/3 \qquad (9)$$

Figure 5(c) shows the simplified model for the seven-level inverter when the utility voltage is within this voltage range. The closed-loop transfer function can be derived as:

$$I_o = \frac{k_{pwm} G_c / L_f}{s + k_i k_{pwm} G_c / L_f} I_o^* - \frac{1/L_f}{s + k_i k_{pwm} G_c / L_f} (V_u - 2V_{dc}/3) \quad (10)$$

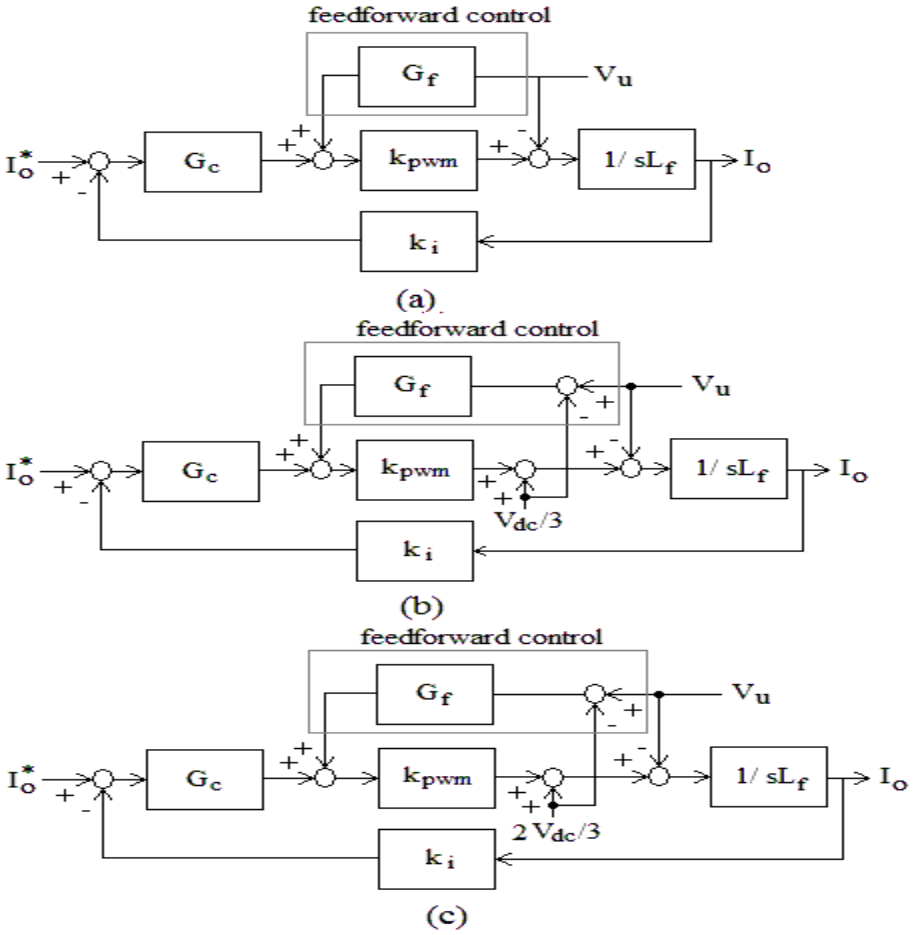

Fig. 4.5: model of seven-level inverter under different range of utility voltage, (a) in the range of smaller than Vdc/3, (b) in the range of (Vdc/3, 2Vdc/3), (c) in the range of higher than 2Vdc/3

As seen in (6), (8) and (10), the second term is the disturbance. Hence, a feedforward control, which is also shown in Fig. 5, should be used to eliminate the disturbance, and the gain Gf should be 1/kpwm.

In the negative half cycle, the seven-level inverter is switched between modes 5 and 8, in order to output a voltage of -Vdc/3 or 0 when the absolute value of the utility voltage is smaller than Vdc/3. Accordingly, S3 is switched in PWM. The seven-level inverter is switched in modes 6 and 5 to output a voltage of -2Vdc/3 or -Vdc/3 when the utility voltage is in the range (-Vdc/3, -2Vdc/3).Within this voltage range, SS2 is switched in PWM. The seven-level inverter is switched in modes 7 and 6 to output a voltage of -Vdc or -2Vdc/3 when the utility voltage is in the range (-2Vdc/3, -Vdc). At this voltage range, SS1 is switched in PWM and SS2 remains in the on state to avoid switching of SS2. The simplified model for the seven-level inverter in the negative half cycle is the similar to that for the positive half cycle.

Since only six power electronic switches are used in the proposed seven-level inverter, the power circuit is significantly simplified compared with a conventional seven-level inverter. The states of the power electronic switches of the seven-level inverter, as detailed previously, are summarized in Table I. It can be seen that only one power electronic switch is switched in PWM within each voltage range and the change in the output voltage of the seven-level inverter for each switching operation is Vdc/3, so switching power loss is reduced. Figures 3 and 4 show that only three semiconductor devices are conducting in series in modes 1, 3, 4, 5, 7 and 8 and four semiconductor devices are conducting in series in modes 2 and 6. This is superior to the conventional multi-level inverter topologies, in which at least four semiconductor devices are conducting in series. Therefore, the conduction loss of the proposed seven-level inverter is also reduced slightly. The drawback of the proposed seven-level inverter is that the voltage rating of the full-bridge converter is higher than that of conventional multi-level inverter topologies.

The leakage current is an important parameter in a solar power generation system for transformerless operation. The leakage current is dependent on the parasitic capacitance and the negative terminal voltage of the solar cell array respect to ground. To reduce the leakage current, the filter inductor Lf should be replaced by a symmetric topology and the solar power generation system is redrawn as Fig. 6. Figure 7 shows the simulation results of the proposed solar power generation system.

Figure 7(b) is the negative terminal voltage of the solar cell array for the seven-level inverter with the symmetric filter inductor of 0.95mH. As seen in Fig. 7(b), this voltage contains a high-frequency ripple. The peak-to-peak value of the high-frequency ripple is about 30V, which is much smaller than that of a full-bridge inverter with unipolar switching.

This high-frequency ripple will result in a leakage current of solar cell array. If the leakage current of solar cell array is too high to be accepted, an extra filter Cf-Rf-Cf, as shown in Fig. 6, can be added. Since the switching of S4 is synchronized with the utility voltage, the extra filter Cf-Rf-Cf is only added in the power-electronic leg (S1, S2). Figure 7(c) shows the negative terminal voltage of a solar cell array for the seven-level inverter with the symmetric filter inductor and the extra filter Cf-Rf-Cf of 1□ F-25□-1□ F. As seen in Fig. 7(c), the high-frequency ripple is attenuated effectively, so the leakage current can be further reduced.

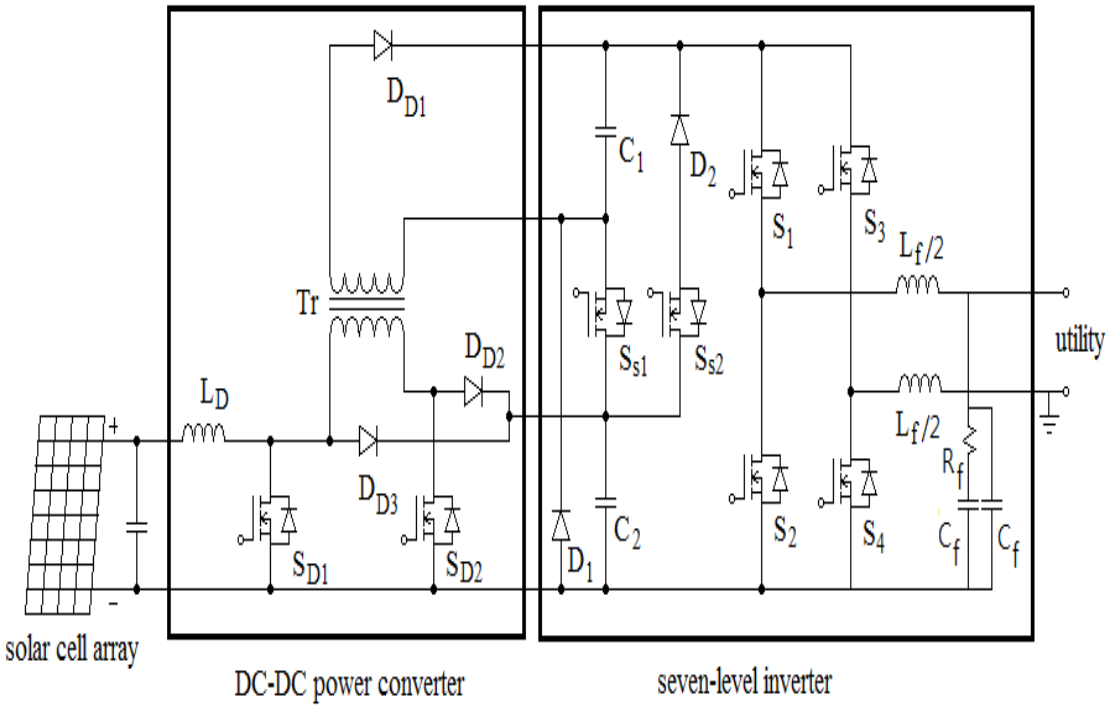

Fig. 4.6: configuration of the proposed solar power generation system for suppressing the leakage current

Table I

states of power electronic switches for seven-level inverter

positive half cycle						
	S_{S1}	S_{S2}	S_1	S_2	S_3	S_4
$\|v_u\| < V_{dc}/3$	off	off	PWM	off	off	on
$2V_{dc}/3 > \|v_u\| > V_{dc}/3$	off	PWM	on	off	off	on
$\|v_u\| > 2V_{dc}/3$	PWM	on	on	off	off	on
negative half cycle						
$\|v_u\| < V_{dc}/3$	off	off	off	on	PWM	off
$2V_{dc}/3 > \|v_u\| > V_{dc}/3$	off	PWM	off	on	on	off
$\|v_u\| > 2V_{dc}/3$	PWM	on	off	on	on	off

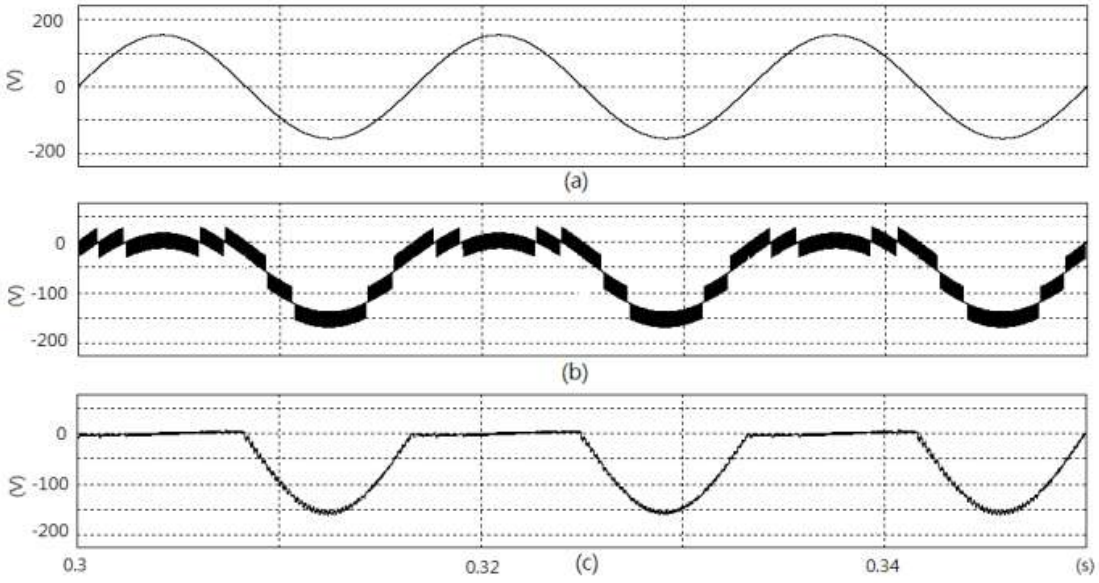

Fig. 4.7: simulation results of proposed solar power generation system, (a) utility voltage, (b) negative terminal voltage for adding the symmetric filter inductor, (c) negative terminal voltage for adding the symmetric filter inductor and the extra filter Cf-Rf-Cf

CHAPTER-5

MATLAB & SIMULINK

5.1 MATLAB:

5.1.1 Introduction:

MATLAB® is a high-level technical computing language and interactive environment for algorithm development, data visualization, data analysis, and numeric computation. Using the MATLAB product, you can solve technical computing problems faster than with traditional programming languages, such as C, C++, and FORTRAN.

MATLAB is used in wide range of applications, including signal and image processing, communications, control design, test and measurement, financial modeling and analysis, and computational biology. Add-on toolboxes (collections of special-purpose MATLAB functions, available separately) extend the MATLAB environment to solve particular classes of problems in these application areas.

MATLAB provides a number of features for documenting and sharing your work. You can integrate your MATLAB code with other languages and applications, and distribute your MATLAB algorithms and applications.

5.1.2 Key Features:

- High-level language for technical computing
- Development environment for managing code, files, and data
- Interactive tools for iterative exploration, design, and problem solving
- Mathematical functions for linear algebra, statistics, Fourier analysis, filtering, optimization, and numerical integration
- 2-D and 3-D graphics functions for visualizing data
- Tools for building custom graphical user interfaces
- Functions for integrating MATLAB based algorithms with external applications and languages, such as C, C++, Fortran, Java, COM, and Microsoft Excel

5.2 SIMULINK:

5.2.1 Introduction:

Simulink is an environment for multi-domain simulation and Model-Based Design for dynamic and embedded systems. It provides an interactive graphical environment and a customizable set of block libraries that let you design, simulate,

implement, and test a variety of time-varying systems, including communications, controls, signal processing, video processing, and image processing.

Add-on products extend Simulink software to multiple modeling domains, as well as provide tools for design, implementation, and verification and validation tasks.

Simulink is integrated with MATLAB®, providing immediate access to an extensive range of tools that let you develop algorithms, analyze and visualize simulations, create batch processing scripts, customize the modeling environment, and define signal, parameter, and test data.

5.2.2 Key Features:

1. Extensive and expandable libraries of predefined blocks
2. Interactive graphical editor for assembling and managing intuitive block diagrams
3. Ability to manage complex designs by segmenting models into hierarchies of design components
4. Model Explorer to navigate, create, configure, and search all signals, parameters, properties, and generated code associated with your model
5. Application programming interfaces (APIs) that let you connect with other simulation programs and incorporate hand-written code
6. Embedded MATLAB™ Function blocks for bringing MATLAB algorithms into Simulink and embedded system implementations
7. Simulation modes (Normal, Accelerator, and Rapid Accelerator) for running simulations interpretively or at compiled C-code speeds using fixed- or variable-step solvers
8. Graphical debugger and profiler to examine simulation results and then diagnose performance and unexpected behavior in your design
9. Full access to MATLAB for analyzing and visualizing results, customizing the modeling environment, and defining signal, parameter, and test data
10. Model analysis and diagnostics tools to ensure model consistency and identify modeling errors.

5.2.3 Block Diagram:

A Simulink block diagram is a pictorial model of a dynamic system. It consists of a set of symbols, called blocks, interconnected by lines. Each block represents an elementary dynamic system that produces an output either continuously (a continuous

block) or at specific points in time (a discrete block). The lines represent connections of block inputs to block outputs. Every block in a block diagram is an instance of a specific type of block. The type of the block determines the relationship between a block's outputs and its inputs, states, and time. A block diagram can contain any number of instances of any type of block needed to model a system. Blocks represent elementary dynamic systems that Simulink knows how to simulate. A block comprises one or more of the following:

1) A set of inputs,
2) A set of states, and
3) A set of outputs

A block's output is a function of time and the block's inputs and states (if any). The specific function that relates a block's output to its inputs, states, and time depends on the type of block of which the block is an instance. Continuous Versus discrete Blocks Simulink's standard block set includes continuous blocks and discrete blocks. Continuous blocks respond continuously to continuously changing input. Discrete blocks, by contrast, respond to changes in input only at integral multiples of a fixed interval called the block's sample time. Discrete blocks hold their output constant between successive sample time hits. Each discrete block includes a sample time parameter that allows you to specify its sample rate. The Simulink blocks can be either continuous or discrete, depending on whether they are driven by continuous or discrete blocks. A block that can be either discrete or continuous is said to have an implicit sample rate. The implicit sample time is continuous if any of the block's inputs are continuous. The implicit sample time is equal to the shortest input sample time if all the input sample times are integral multiples of the shortest time. Otherwise, the input sample time is equal to the fundamental sample time of the inputs, where the fundamental sample time of a set of sample times is defined as the greatest integer divisor of the set of sample times.

Simulink can optionally color code a block diagram to indicate the sample times of the blocks it contains, e.g., black (continuous), magenta (constant), yellow (hybrid), red (fastest discrete), and so on. The block contains block name, icon, and block library that contain the block, the purpose of the block.

5.2.4 Simulink Block Libraries

Simulink organizes its blocks into block libraries according to their behavior:

1) The Sources library contains blocks that generate signals.
2) The Sinks library contains blocks that display or write block output.
3) The Discrete library contains blocks that describe discrete-time components.
4) The Continuous library contains blocks that describe linear functions.
5) The Math library contains blocks that describe general mathematics functions.
6) The Functions & Tables library contains blocks that describe general functions and table look-up operations.
7) The Nonlinear library contains blocks that describe nonlinear functions.
8) The Signal & Systems library contains blocks that allow multiplexing and de-multiplexing, implement external input/output, pass data to other parts of the model, and perform other functions.
9) The Subsystems library contains blocks for creating various types of subsystems.
10) The Block sets and Toolboxes library contains the Extras block library of specialized blocks.

5.2.5 Sub Systems

Simulink allows to model a complex system as a set of interconnected subsystems each of which is represented by a block diagram. We create a subsystem using Simulink's Subsystem block and the Simulink model editor. We can embed subsystems with subsystems to any depth to create hierarchical models. We can create conditionally executed subsystems that are executed only when a transition occurs on a triggering or enabling input.

5.2.6 Solvers

Simulink simulates a dynamic system by computing its states at successive time step solver a specified time span, using information provided by the model. The process of computing the successive states of a system from its model is known as solving the model. No single method of solving a model suffices for all systems. Accordingly, Simulink provides a set of programs, known as solvers, that each

embody a particular approach to solving a model. The Simulation Parameters dialog box allows us to choose the solver most suitable for our model.

5.2.6.1 Fixed-Step Solvers

Fixed-step solvers solve the model at regular time intervals from the beginning to the end of the simulation. The size of the interval is known as the step-size. We can specify the step size or let the solver choose the step size. Generally decreasing the step size increases the accuracy of the results while increasing the time required to simulate the system.

5.2.6.2 Variable-Step Solvers

Variable-step solvers vary the step size during the simulation, reducing the step size to increase accuracy when a model's states are changing rapidly and increasing the step size to avoid taking unnecessary steps when the model's states are changing slowly. Computing the step size adds to the computational overhead at each step but can reduce the total number of steps, and hence simulation time, required to maintain a specified level of accuracy for models with rapidly changing or piecewise continuous states.

5.2.6.3 Continuous Solvers:

Continuous solvers use numerical integration to compute a model's continuous states at the current time step from the states at previous time steps and the state derivatives. Continuous solvers rely on the model's blocks to compute the values of the model's discrete states at each time step. Mathematicians have developed a wide variety of numerical integration techniques for solving the ordinary differential equations (ODEs) that represent the continuous states of dynamic systems. Simulink provides an extensive set of fixed-step and variable-step continuous solvers, each implementing a specific ODE solution method. Some continuous solvers subdivide the simulation time span into major and minor steps, where a minor time step represents a subdivision of the major time step. The solver produces a result at each major time step. It uses results at the minor time steps to improve the accuracy of the result at the major time step.

5.2.6.4 Discrete Solvers:

Discrete solvers exist primarily to solve purely discrete models. They compute the next simulation time-step for a model and nothing else. They do not compute continuous states and they rely on the model's blocks to update the model's discrete states. We can use a continuous solver, but not a discrete solver, to solve a model that contains both continuous and discrete states. This is because a discrete solver does not handle continuous states. If you select a discrete solver for a continuous model, Simulink disregards your selection and uses a continuous solver instead when solving the model.

Simulink provides two discrete solvers, a fixed-step discrete solver and a variable-step discrete solver. The fixed-step solver by default chooses a step size and hence simulation rate fast enough to track state changes in the fastest block in our model. The variable-step solver adjusts the simulation step size to keep pace with the actual rate of discrete state changes in our model. This can avoid unnecessary steps and hence shorten simulation time for multirate models.

5.3 The Power System Block Set:

Electrical power systems are combinations of electrical circuits and Electro-mechanical devices, like motors and generators. Engineers working in this discipline are frequently tasked to improve the performance of the systems. Requirements for drastically increased efficiency have forced power system designers to use power electronic devices and sophisticated control system concepts that tax traditional analysis tools and techniques. Further complicating the analyst’s role is the fact that the system is often so nonlinear that the only way to understand it is through simulation. Land-based power generation from hydroelectric, steam, or other devices is not the only use of power systems. A common attribute of these systems is their use of power electronics and control systems to achieve their performance objectives. The Power System Block set was designed to provide a modern design tool that will allow scientists and engineers to rapidly and easily build models that simulate power systems. The block set uses the Simulink® environment allowing a model to be built using simple click and drag procedures. Not only can the circuit topology be drawn rapidly, but the analysis of the circuit can include its interactions with mechanical, thermal, control, and other disciplines. This is possible because all the electrical parts of the simulation interact with Simulink’s extensive modeling library. Because

Simulink uses MATLAB® as the computational engine, you can use MATLAB's toolboxes as you design your simulation.

The block set can be put to work rapidly. The libraries contain models of typical power equipment, such as transformers, lines, machines, and power electronics. These models are proven ones coming from textbooks, and their validity is based on the experience of the Power Systems Testing and Simulation Laboratory of Hydro-Québec, a large North American utility located in Canada. The capabilities of the block set for modeling a typical electrical grid are illustrated in demonstration files. The block set fits well with other specialized analytical tools you use in the power system community.

5.4 Simulink Blocks used in the Simulation:

1. Three-Phase Source:

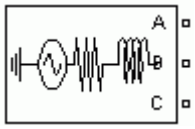

Purpose: Implement three-phase source with internal R-L impedance

Description: The Three-Phase Source block implements a balanced three-phase voltage source with internal R-L impedance. The three voltage sources are connected in Y with a neutral connection that can be internally grounded or made accessible. You can specify the source internal resistance and inductance either directly by entering R and L values or indirectly by specifying the source inductive short-circuit level and X/R ratio.

2. In port:

Purpose: Provide a link to an external input and for linearization.

Description: In ports are the links from the outside world into a system. Inside a subsystem block, there is an in port corresponding to each input port on the block. A signal that arrives at an input port on a subsystem block flows out of the corresponding in port within that block. The imports within a subsystem block must be numbered consecutively, starting with1.

3. out port:

Purpose: provide a link to an external output and for linearization.

Description: The Out port block provides a mechanism for labeling a system's outputs. In a subsystem, output ports correspond to outputs on the subsystem block.

4. Subsystem:

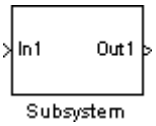

Purpose: Group blocks into a subsystem

Description: Subsystem blocks represent one system within another system. Any set of blocks and lines can be converted to a Subsystem block with the Group command on the options menu. The Group command removes all selected objects from the active window and replaces them within a Subsystem block. This new block, when opened, redisplays all of the grouped objectives.

5. Gain:

Purpose: Multiply its input by a constant.

Description: The Gain block implements Y=KU, where Y is the output, U is the input, and K is the specified gain. The Gain block displays scalar gain data entered as variable or a constant. The block displays the text as it appears in the dialog box.

6. Scope:

Purpose: Display signals during simulation.

Description: While the simulation is running, the Scope block displays the output of the block driving it. Opening a scope block produces a scope window. The title of this window matches the name of the block.

7. Simplified Synchronous Machine:

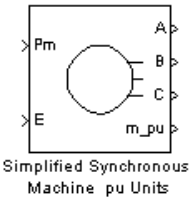

Purpose: Model the dynamics of a simplified three-phase synchronous machine

Description: The Simplified Synchronous Machine block models both the electrical and mechanical characteristics of a simple synchronous machine. The electrical system for each phase consists of a voltage source in series with RL impedance, which implements the internal impedance of the machine. The value of R can be zero but the value of L must be positive.

8. Voltage Measurement:

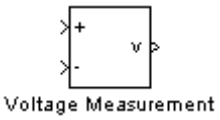

Purpose: Measure a voltage in a circuit

Description: The Voltage Measurement block is used to measure the instantaneous voltage between two electric nodes. The output is a Simulink signal that can be used by other Simulink blocks.

9. Breaker:

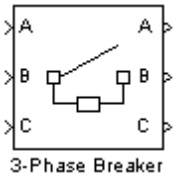

Purpose: Implement a circuit breaker opening at current zero crossing

Description: The Breaker block implements a circuit breaker that is controlled by a Simulink signal applied on its second input. The control signal must be 0 or 1, 0 for open and 1 for closed. The arc extinction process is simulated by opening the breaker when the current passes through zero (first current zero-crossing following the transition of the Simulink control input from 1 to 0). When the breaker is closed, it behaves as a series RL circuit. The R and L values can be set as small as necessary in order to be negligible compared with external components (typical values Ron=10m?, Lon=10μH). When the breaker is open, it has infinite impedance. If the breaker's initial state is set to 1 (closed), initializes all the states of the linear circuit and breaker initial current so that the simulation starts in steady-state.

10. Bus bar:

Purpose: Implement a labeled network node

Description: The Bus Bar block is used to interconnect components. It allows multiple electrical block outputs and inputs to be connected together.

11. Current Measurement:

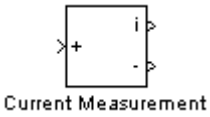

Purpose: Measure a current in a circuit

Description: The Current Measurement block is used to measure the instantaneous current flowing in any electrical block or connection line. The first output provides a Simulink signal that can be used by other Simulink blocks.

12. Distributed Parameter Line:

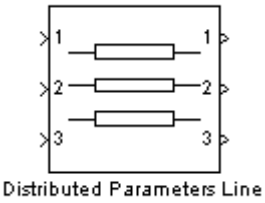

Purpose: Implement an N-phase distributed parameter transmission line model with lumped losses

Description: The Distributed Parameter Line block implements an N-phase distributed parameter line model with lumped losses.

13. Excitation System:

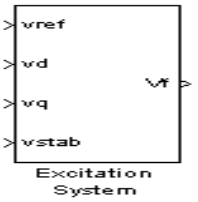

Purpose: Provide an excitation system for the synchronous machine and regulate its terminal voltage in generating mode

Description: The basic elements that form the Excitation System block are the voltage regulator and the exciter. The voltage regulator consists of a main regulator with gain K_a and time constant T_a and a lead-lag compensator with time constants T_b and T_c. A derivate feedback is also provided with gain K_f and time constant T_f. The limits E_{fmin} and E_{fmax} are imposed to the output of the voltage regulator. The upper limit can be constant and equal to Efmax or variable and equal to the rectified stator

terminal voltage V_{tf} times a proportional gain K_p. If K_p is set to zero, the former will apply. If K_p is set to a positive value, the latter will apply. The stator terminal voltage transducer is represented by a first-order low-pass filter with time constant T_r.

14. Steam Turbine and Governor:

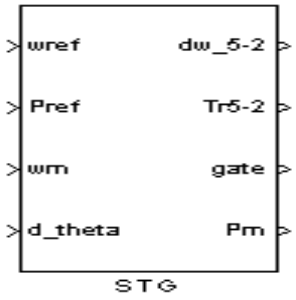

Purpose: Model a steam turbine and a PID governor system

Description: The Steam Turbine and Governor implement a steam turbine model, a PID governor system, and a servo-motor. The static gain of the governor is equal to the inverse of the permanent droop Rp in the feedback loop. The input to this feedback loop can be selected to be the gate position or the electrical power deviation by setting the droop reference parameter in the dialog box to one or zero, respectively.

15. Linear Transformer:

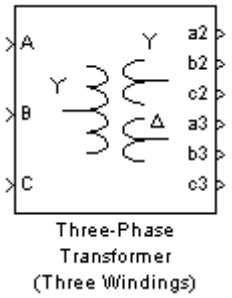

Purpose: Implement a two- or three-winding linear transformer

Description: The Linear Transformer block model shown below consists of three coupled windings wound on the same core.

16. Saturable Transformer:

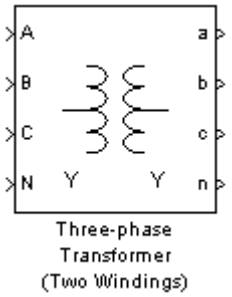

Purpose: Implement a two- or three-winding saturable transformer

Description: The Saturable Transformer block model shown below consists of three coupled windings wound on the same core.

CHAPTER-6

SIMULATION RESULTS

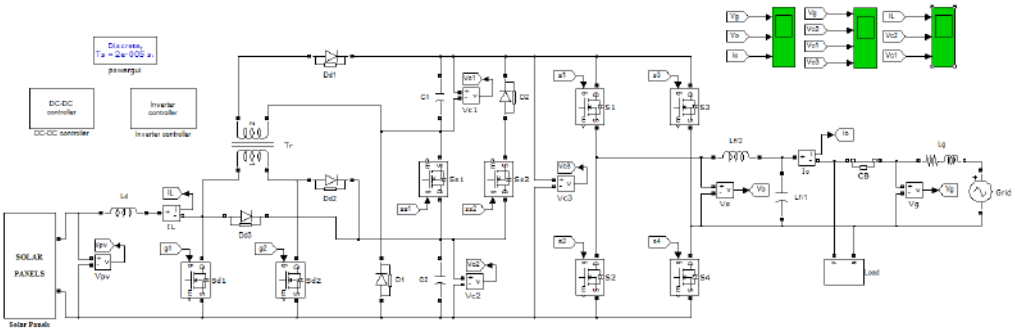

Figure 6.1: Simulink Diagram

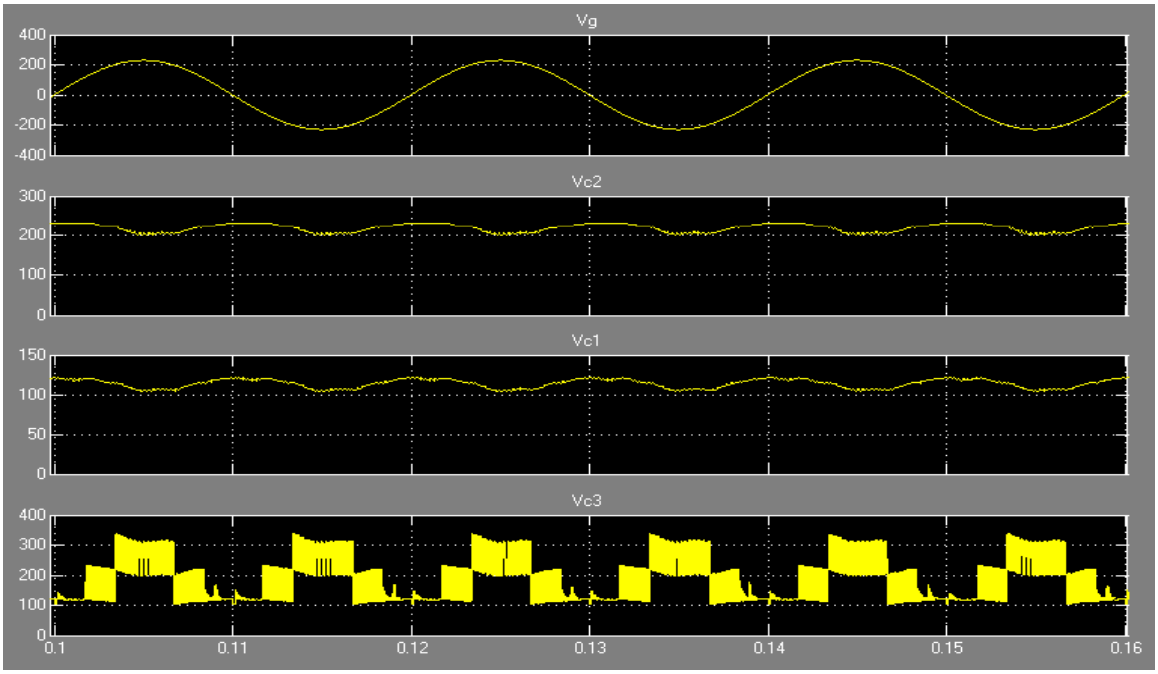

Figure 6.2: Simulation results for the dc side of the seven-level inverter

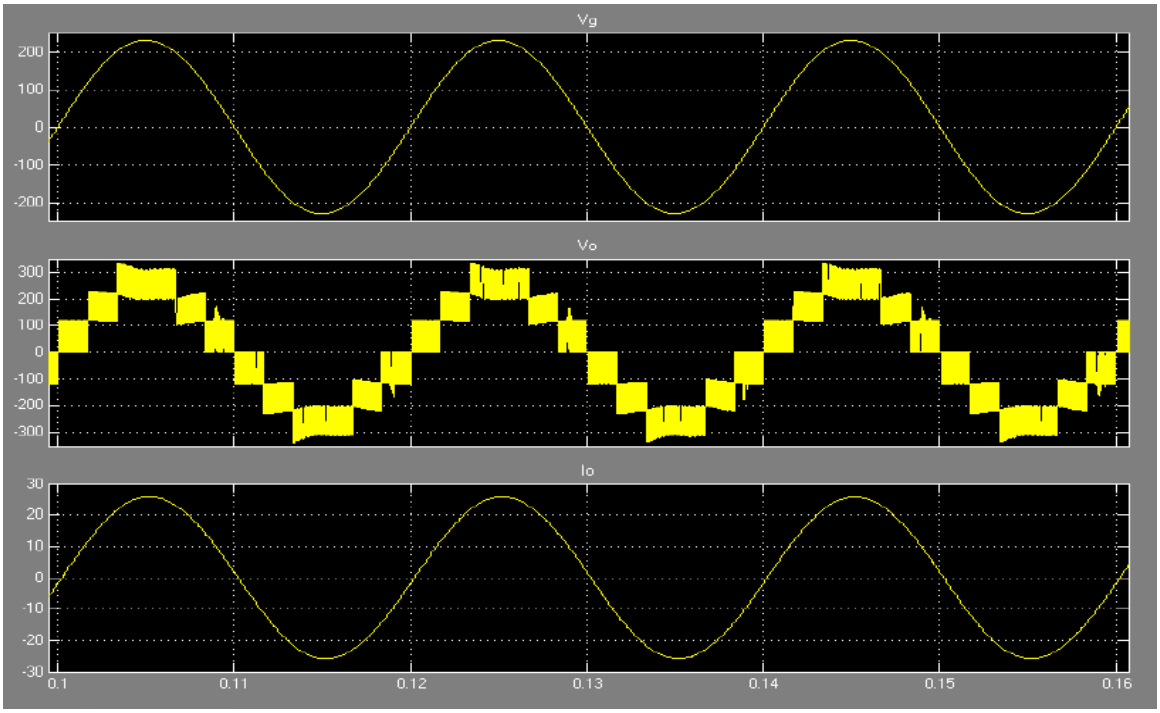

Figure 6.3: Simulation results for the ac side of the seven-level inverter

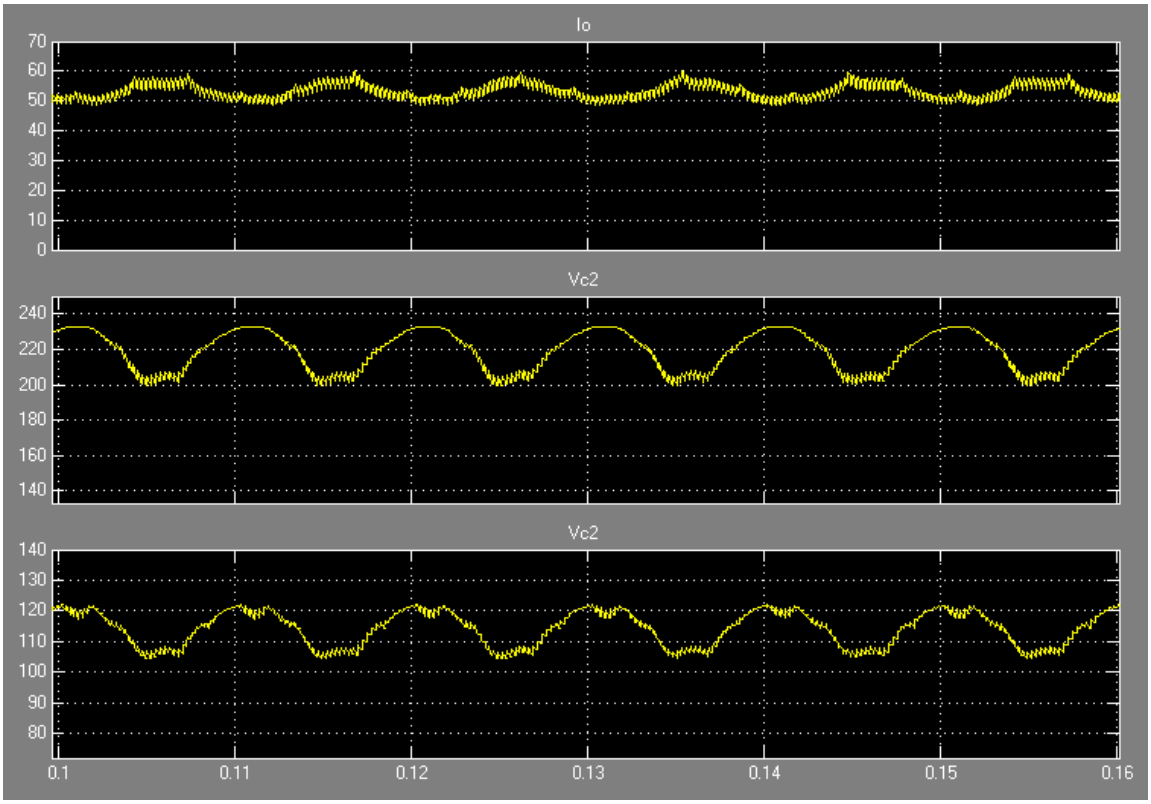

Figure 6.4: Simulation results of the dc–dc power converter

Conclusion

This project proposes a solar power generation system to convert the DC energy generated by a solar cell array into AC energy that is fed into the utility. The proposed solar power generation system is composed of a DC/DC power converter and a seven-level inverter. The seven-level inverter contains only six power electronic switches, which simplifies the circuit configuration. Furthermore, only one power electronic switch is switched at high frequency at any time to generate the seven-level output voltage. This reduces the switching power loss and improves the power efficiency. The voltages of the two DC capacitors in the proposed seven-level inverter are balanced automatically, so the control circuit is simplified. Experimental results show that the proposed solar power generation system generates a seven-level output voltage and outputs a sinusoidal current that is in phase with the utility voltage, yielding a power factor of unity. In addition, the proposed solar power generation system can effectively trace the maximum power of solar cell array.

References

[1] R.A. Mastromauro, M. Liserre, A.Dell'Aquila, "Control Issues in Single-Stage Photovoltaic Systems: MPPT, Current and Voltage Control," *IEEE Trans. Ind. Informat.*, Vol. 8, No.2, pp.241-254, 2012.

[2] Z. Zhao, M. Xu, Q. Chen, J.S Jason Lai, Y. H. Cho, "Derivation, Analysis, and Implementation of a Boost–Buck Converter-Based High-Efficiency PV Inverter," *IEEE Trans. Power Electron.*, Vol. 27, No. 3, pp.1304-1313, 2012.

[3] M. Hanif, M. Basu, K. Gaughan., "Understanding the operation of a Z-source inverter for photovoltaic application with a design example," *IET Power Electron.*, Vol. 4, No. 3, pp.278-287, 2011.

[4] J, M. Shen, H. L. Jou, J. C. Wu, "Novel Transformer-less Grid-connected Power Converter with Negative Grounding for Photovoltaic Generation System," *IEEE Trans. Power Electronics*, Vol. 27, No. 4, pp.1818-1829, 2012.

[5] N. Mohan, T. M. Undeland, W. P. Robbins, *Power Electronics Converters, Applications and Design*, Media Enhanced 3rd ed. New York: John Wiely& Sons, 2003.

[6] K. Hasegawa, H. Akagi, "Low-Modulation-Index Operation of a Five-Level Diode-Clamped PWM Inverter With a DC-Voltage-Balancing Circuit for a Motor Drive ," *IEEE Trans. Power Electron.*, Vol. 27, No. 8, pp.3495-3505, 2012.

[7] E. Pouresmaeil, D. Montesinos-Miracle, O. Gomis-Bellmunt, "Control Scheme of Three-Level NPC Inverter for Integration of Renewable Energy Resources Into AC Grid," *Syst. J.*, Vol.6, No.2, pp.242-253, 2012.

[8] S. Srikanthan, M. K. Mishra, "DC Capacitor Voltage Equalization in Neutral Clamped Inverters for DSTATCOM Application," *IEEE Trans. Ind. Electron.* Vol. 57, No.8, pp.2768-2775, 2010.

[9] M. Chaves, E. Margato, J. F. Silva, S. F. Pinto, "New approach in back-to-back m-level diodeclamped multilevel converter modelling and direct current bus voltages balancing," *IET Power Electron.*, Vol. 3, No. 4, pp. 578-589, 2010.

[10] J. D. Barros, J. F. A. Silva, E. G. A Jesus, "Fast-Predictive Optimal Control of NPC Multilevel Converters," *IEEE Trans. Ind. Electron.*, Vol.60, No.2, pp.619-627, 2013.

[11] A.K. Sadigh, S. H. Hosseini, M. Sabahi, G. B. Gharehpetian, “Double Flying Capacitor Multicell Converter Based on Modified Phase-Shifted Pulsewidth Modulation,” *IEEE Trans. Power Electron.,* Vol. 25, No.6, pp. 1517-1526, 2010.

[12] S. Thielemans, A. Ruderman, B. Reznikov, J. Melkebeek, “Improved Natural Balancing With Modified Phase-Shifted PWM for Single-Leg Five-Level Flying-Capacitor Converters,” *IEEE Trans. Power Electron.*, Vol. 27, No. 4, pp. 1658-1667, 2012.

[13] S. Choi, M. Saeedifard, “Capacitor Voltage Balancing of Flying Capacitor Multilevel Converters by Space Vector PWM,” *IEEE Trans. Power Del.,* Vol.27, No.3, pp.1154-1161, 2012.

[14] L. Maharjan, T. Yamagishi, H. Akagi, "Active-Power Control of Individual Converter Cells for a Battery Energy Storage System Based on a Multilevel Cascade PWM Converter,” *IEEE Trans. Power Electron.,* Vol. 27, No.3, pp.1099-1107, 2012.

[15] X. She, A. Q. Huang, T. Zhao; G. Wang, “Coupling Effect Reduction of a Voltage-Balancing Controller in Single-Phase Cascaded Multilevel Converters,” *IEEE Trans. Power Electron.*, Vol. 27, No.8, pp.3530-3543, 2012.

[16] J. Chavarria, D. Biel, F. Guinjoan, C. Meza, J. J. Negroni, “Energy-Balance Control of PV Cascaded Multilevel Grid-Connected Inverters Under Level-Shifted and Phase-Shifted PWMs,” *IEEE Trans. Ind. Electron.,* Vol.60, No.1, pp.98-111, 2013.

[17] J. Pereda, J. Dixon, “High-Frequency Link: A Solution for Using Only One DC Source in Asymmetric Cascaded Multilevel Inverters,” *IEEE Trans. Ind. Electron.*, Vol. 58, No.9, pp.3884-3892, 2011.

[18] N. A. Rahim, K. Chaniago, J. Selvaraj, “Single-Phase Seven-Level Grid-Connected Inverter for Photovoltaic System,” *IEEE Trans. Ind. Electron.,* Vol. 58, No.6, pp.2 435-2443, 2011.

[19] Y. Ounejjar, K. Al-Hadded, L. A. Dessaint, “A Novel Six-Band Hysteresis Control for the Packed U Cells Seven-Level Converter: Experimental Validation,” *IEEE Trans. Ind. Electron.*, Vol. 59, No. 10, pp.3808-3816, 2012.

[20] Jun Mei, Bailu Xiao, Ke Shen, L. M. Jian Yong Zheng, “Modular Multilevel Inverter with New Modulation Method and Its Application to Photovoltaic Grid-Connected Generator,” *IEEE Trans. Power Electron.*, Vol. 28, No. 11, pp.5063-5073, 2013.

[21] I. Abdalla, J. Corda, L. Zhang, "Multilevel DC-Link Inverter and Control Algorithm to Overcome the PV Partial Shading," *IEEE Trans. Power Electron.*, Vol. 28, No. 1, pp.11-18, 2013.

[22] J, M. Shen, H. L. Jou, J. C. Wu, "Novel Transformer-less Grid-connected Power Converter with Negative Grounding for Photovoltaic Generation System," *IEEE Trans. Power Electron.*, Vol. 27, No. 4, pp.1818-1829, 2012.

[23] R. Gonzalez, J. Lopez, P. Sanchis, and L. Marroyo, "Transformerless inverter for single-phase photovoltaic systems," *IEEE Trans. Power Electron., Vol.22, No. 2, 2007, pp.693-697.*

[24] N. Femia, G. Petrone, G. Spagnuolo, and M. Vitelli, "Optimization of perturb and observe maximum power point tracking method," IEEE Trans. Power Electron., Vol. 20, No. 4, pp. 963-973, 2005.

1.3.2. Name and Average percentage of courses that include experiential learning through project work/field work/internship during last five years

Sample Project EEE

Academic Year 2020-2021

Name of the Project: DESIGN AND MODELING OF MICROGRID WITH INTEGRATION OF MULTIPLE RENEWABLE ENERGY SOURCES

S.NO	COURSE NUMBER	COURSE NAME	MAPPING PAGE NO
1	1	Electrical Circuit Analysis – I	
2	2	Electrical Circuit Analysis – II	
3	3	Electrical Machines-I	5,7,8,11
4	4	Basic Electronics and Devices	14,24,29,30,31
5	5	Electro Magnetic Fields	26
6	6	Electrical Measurements	14,17,49,52
7	7	Electrical Machines-II	24,28,32
8	8	Switching Theory and Logic Design	56
9	9	Control Systems	4,6,7,11,18,20
10	10	Power Systems-I	9
11	11	Power Systems-II	25,32,38
12	12	Renewable Energy Sources	24,34,48,
13	13	Signals and Systems	2,15,16,35,37,42,53
14	14	Pulse & Digital Circuits	17,38
15	15	Power Electronics	6,9,25,26,27,32,33,36,39,
16	16	Power Electronic Controllers & Drives	1,5,10,12,28,40,43,49,50,52
17	17	Power System Analysis	25
18	18	Micro Processors and Micro controllers	1,5,6,13,14,49,51
19	19	Neural Networks &Fuzzy Logic	
20	20	Utilization of Electrical Energy	25
21	21	Linear IC Applications	18,19,38
22	22	Power System Operation & Control	22,23
23	23	Switchgear and Protection	35
24	24	Instrumentation	
25	25	Special Electrical Machines	5,8,34
26	26	Digital Control Systems	22
27	27	HVDC Transmission	
28	28	Flexible Alternating Current Transmission Systems	62
29	29	Electrical Distribution Systems	50

1 Total Number of Domain subjects: 29
2 Number of Subjects that include experiential learning through project work: 25
3 Average: 86.2%

HOD-EEE PRINCIPAL

SAMPLE PROJECT

DESIGN AND MODELING OF MICROGRID WITH INTEGRATION OF MULTIPLE RENEWABLE ENERGY SOURCES

A Dissertation Report Submitted in Partial Fulfillment of the Requirements for the Award of the Degree of

BACHELOR OF TECHNOLOGY

IN

ELECTRICAL AND ELECTRONICS ENGINEERING

Submitted by

CH. SEETHARAMULU (17ME1A0213)

CH.DEEPU (17ME1A0211)

T. DEVI PAVAN SRINIVAS (17ME1A0255)

G.SURESH (18ME5A0209)

Under the Esteemed Guidance of

Mrs. CH. SABITHA
Assistant Professor

DEPARTMENT OF ELECTRICAL AND ELECTRONICS ENGINEERING

RAMACHANDRA COLLEGE OF ENGINEERING

(AFFILIATED TO JNT UNIVERSITY, KAKINADA)

VATLURU, ELURU, WEST GODAVARI DIST, A.P, INDIA-534007.

2020-21

DEPARTMENT OF ELECTRICAL AND ELECTRONICS ENGINEERING

RAMACHANDRACOLLEGE OF ENGINEERING

ELURU-534007.

CERTIFICATE

This is to certify that the project work entitled "DESIGN AND MODELING OF MICROGRID WITH INTEGRATION OF MULTIPLE RENEWABLE ENERGY SOURCES" submitted by CH.SEETHARAMULU (17ME1A0213), CH.DEEPU (17MEA10211), T.DEVI PAVAN SRINIVAS (17ME1A0255), G.SURESH (18ME5A0209) in partial fulfillment of the requirements for the award of degree of the Bachelor of Technology in the Department of Electrical & Electronics Engineering during the academic year 2020-2021.

Mrs. Ch. Sabitha
Project Supervisor

Dr. S. Jayalakshmi
Head of the Department

External Examiner

ACKNOWLEDGEMENTS

We wish to express our sincere deep sense of gratitude and indebtedness to our project guide *Mrs. Ch. SABITHA, Assistant professor* of Electrical and Electronics Engineering Department, for his significant suggestions and help in every respect to accomplish the project work. Her persisting encouragement, everlasting patience and keen interest in discussions have benefited us to the extent that cannot be spanned by words. She has been the continuous source of inspiration for us throughout the work.

We are very thankful to *Dr. S. JAYALAKSHMI*, Head of the Department of Electrical and Electronics Engineering and Principal, *Dr. SANJAY DOLA S* for their indispensible encouragement to complete the Thesis.

We would like to thank all the faculty members of the Department of Electrical and Electronics Engineering for their direct or indirect support for helping us in completion of this Thesis.

Last but not the least we convey our thanks to one and all who are involved directly or indirectly helped us in successful completion of this Thesis.

CH.SEETHARAMULU (17ME1A0213),
CH.DEEPU (17ME1A0211),
T.DEVI PAVAN SRINIVAS (17ME1A0255),
G.SURESH (18ME5A0209).

ABSTRACT

This project presents the design of a control strategy for a direct current micro-grid (DCMG) for integrating various renewable energy sources. The use of renewable resources like the solar energy and various other clean sources of energy has been on an increase in demand in the recent years due to their ease in availability and low and cost. This project demonstrates how to use the solar energy, wind energy and the kinetic energy from footsteps of people walking over piezo based footboard. The Solar Panel is used to harness the solar power. It converts the solar power into voltage, which when more than the voltage in the battery is able to charge the battery. The power available through the solar panel is sensed by an Atmega family microcontroller which it displays on the LCD. The power available through the wind turbine is measured by an Atmega family microcontroller which it displays on the LCD. Similarly, the power generated through footsteps over Piezo Footboard is shown on the LCD. In this case, the footstep count is also displayed on the LCD along with the voltage generated by that particular footstep. In this way one can charge the battery through solar, wind and footstep energies while simultaneously also monitoring of how much is getting generated with the use of Hybrid Power generating System.

CONTENTS

		Page No
Abstract		**i**
List of Figures		**ii**
Chapter 1:	**INTRODUCTION**	**1 -8**
1.1	Motivation for Innovation	2
1.2	Drawbacks of conventional energy sources	4
1.3	Advantages of Renewable energy sources	5
1.4	Constraints in existing layout of hybrid power system	6
1.5	Resources required	7
1.6	Typical applications	7
1.7	Organization of the Dissertation	7
Chapter 2:	**DESCRIPTION OF HPS**	**9-26**
2.1	Introduction to HPS	9
2.2	Importance of combined plants/HPS	10
2.3	Hybrid power systems classifications	11
2.3.1	Stand alone/off grid/Islanding HPS	11
2.3.2	Grid connected HPS	12
2.4	Proposed HPS Architecture	13
2.4.1	Novelty in the design	13
2.5	HPS Components	13
2.5.1	Photovoltaic cell	13
2.5.1.1	Panel Basic	14
2.5.1.2	Temperature effect on solar cell characteristics	18
2.5.1.3	Irradiation effect on solar cell characteristics	19
2.5.1.4	Maximum power point tracking	21
2.6.1	Working power point tracking	21
2.6.2	Chopper	22
2.7	Piezo electric crystals	23
2.8	Applications of piezo electrics to electronic devise	24
2.8.1	Power generation and storage	24
2.8.2	Harvesting of vibrations	25

Chapter 3: HARDWARE DESIGN **27 - 35**

3.1 Hardware components 27

3.2 ARDUINO 28

Chapter 4: SIMULATION RESULTS **36-40**

CONCLUSIONS **41**

REFERENCES **42**

LIST OF FIGURES

Figure No.	Figure Name	PageNo.
Figure 1.1	Energy demand in Andhra Pradesh & India	02
Figure 1.2	Classification of energy sources as renewable/non-renewable	03
Figure 1.3	Energy contributions by various sources in India	04
Figure 2.1	Different renewable energy sources used in the proposed HPS	09
Figure 2.2	Typical data for solar power production for a year	11
Figure 2.3	Solar cell (a) equivalent circuit (b) simplified circuit	14
Figure 2.4	Concept of PV generating system	15
Figure 2.5	PV array V-I characteristics	15
Figure 2.6	Properties of various semiconductor materials	15
Figure 2.8	V-I Characteristics of PV panel for change in temperature	19
Figure 2.9	P–n junction silicon solar cell structure	19
Figure 2.10	V-I characteristics of PV panel for change in irradiation	19
Figure 2.11	P-V/I characteristic of solar panel with MPPT	20
Figure 2.12	Principle schematic of DC–DC voltage converters, (a) is a linear regulator, (b) is a switching regulator.	20
Figure 2.13	Types of switching regulators- Buck, Boost, Buck-Boost Converter Equivalent Circuit Diagram	21
Figure 2.14	Boost chopper circuit	22
Figure 2.15	Concept of Piezo crystal	23
Figure 2.16	power generation using Piezo crystal	25
Figure 2.17	Typical energy harvesting system	25
Figure 3.1	Block diagram of the proposed charging system	27
Figure 3.2	Connection diagram for various components used in the project	32
Figure 3.3	PCB layout used for the project	32
Figure 3.4	Hardware setup of the proposed charging system using solar and piezo sources	35
Figure 4.1	Proposed basic unit	36
Figure 4.2	Proposed basic unit output waveform	36
Figure 4.3	Cascaded 15-level inverter based on the proposed basic unit.	37

Figure 4.4	Cascaded 15-level inverter based on the proposed basic unit	38
Figure 4.5	Proposed basic unit.	38
Figure 4.6	Output voltage waveforms of each unit. (a) vo. (b) vo, 1. (c) vo,	39
Figure 4.7	Waveforms of the DC Voltage and load voltage and current.	40

Chapter 1

INTRODUCTION

Energy is essential to everyone's life no matter when and where they are. This is especially true in this new century, where people keep pursuing higher quality of life. Among different types of energy, electric energy is one of the most important that people need every day. It is now a globally accepted reality that electrical energy is fundamental for social and economic development. Unfortunately still one third of the world's population lives in developing and threshold countries and have no access to electricity [1]. It has been estimated that the world population will reach 8 billion by 2020 [2]. The statistic shows that the population growth is mostly in developing countries where most of the people live in remote and rural areas. So, to supply the electricity requirements for them, the extension of utility grid is complicated and expensive due to geographical, economical and social barriers. Up to now, mostly diesel generator sets are used for rural electrification. This is not a good solution since, the fuel, maintenance cost is expensive, and it is also not environment friendly.

In such circumstances, an alternative is to use locally available renewable energy sources (e.g. PV, wind, hydrogen, and etc..,) and implement modular, expandable and task-oriented systems that guarantee cost-effective and sustainable resources of energy, especially for remote and rural areas. At the world engineering convention in 2000, it has been mentioned that the energy needed will be provided, distributed, and consumed in a suitable way. Keeping this promise in mind, many decentralized Hybrid Power Systems have been installed worldwide.

Multi-source alternative energy systems with proper control have great potential to provide higher quality and more reliable power to customers than a system based on a single resource. However, the issues on optimal system configuration, proper power electronic interfaces and power management among different energy sources are not resolved yet. Therefore, more research work is needed on new alternative energy systems and their corresponding control strategies.

In this chapter, an overview is given on the Indian energy demand, present existing solutions for the crisis, the constraints in their development for future scenario. Furthermore, the scope of the technical, commercial issues coverage and typical applications is addressed. Finally, the organization of the dissertation is also defined.

1.1 Motivations for Innovation

In the world's power utility, especially in the developing countries like India, 70% (Coal-40%, Crude Oil-24%, Natural Gas-6%) of the energy we use comes from fossil fuels as shown in Figure 1.3. With this rate the world virtually depends on the supply of fossil-fuel. But the common issue presented to us is that fossil-fuels are running out since, it would take millions of years to completely restore the fossil fuels that we have used. Furthermore, the energy demand increases drastically as shown in the Figure 1.1 and Table 1. On the other hand, there is a social interest for global environmental concerns about green house effect and global warming, which demands less utilization of fossil fuel resources. This means fossil fuels are non-renewable sources of energy and are not eco-friendly. That's where renewable energy comes in as a resolution for this global issue.

In general, due to the ever increasing energy consumption, the rising public awareness for environmental protection, the exhausting density of fossil-fuel, the intensive political and social concerns upon the nuclear power safety, and the constraints of the existing renewable energy plants, really motivating the researchers towards the utilization of green and renewable energy sources for erecting Hybrid Power Systems (HPS), to contribute deficit power requirements for nation reliably.

The motivations for this dissertation are classified and explained as follows.

- Drawbacks of conventional energy sources
- Advantages of renewable energy sources
- Constraints in existing layouts of Hybrid Power Systems

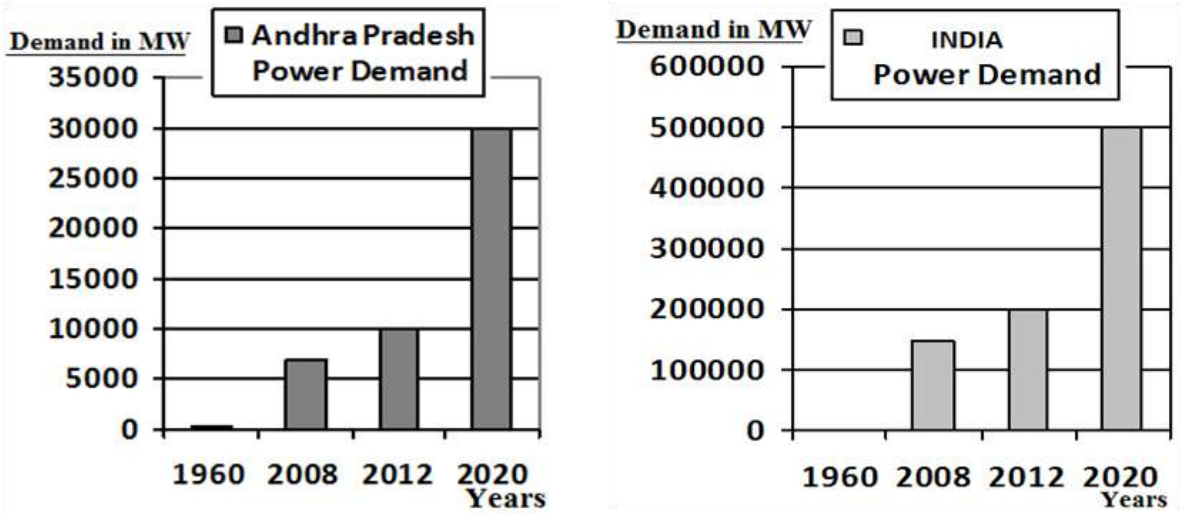

Figure 1.1 Energy demand in Andhra Pradesh & India

TABLE 1.1: RISING ENERGY DEMAND IN ANDHRA PRADESH & INDIA

Year	1960	2008	2018	2020 (Expected)
A.P.	156 MW	7,048.9 MW	15,000 MW	30,000 MW
India	1,900 MW	1,45,626.97 MW	3,00,000 MW	5,00,000 MW

Renewable energy is any natural source that can replenish itself naturally over a short amount of time, unlike the fossil fuels that are likely to run out in years to come. Recent research and development of renewable energy sources have shown excellent potential as a form of contribution to conventional power generation system. Renewable energy comes from many commonly known sources such as solar power, wind, running water, geothermal energy, piezo crystals and atmospheric fuels like hydrogen, etc.., the Figure 1.2 shows different types of renewable energy resources available in general.

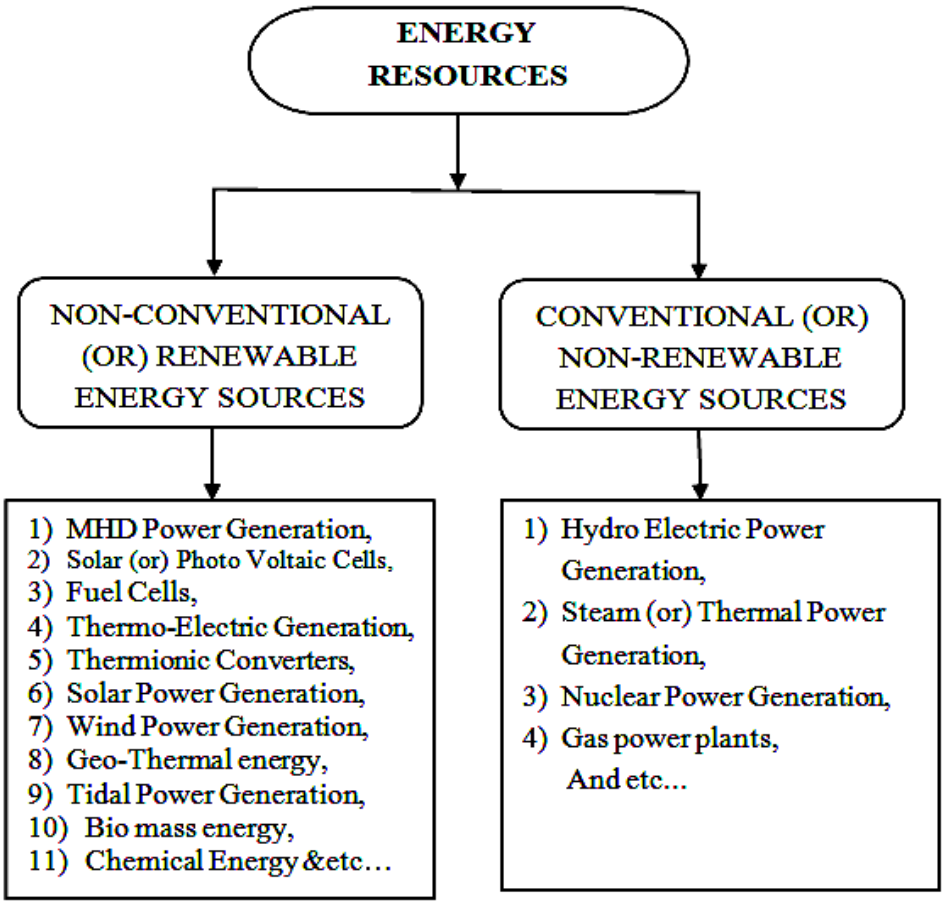

Figure 1.2 Classification of energy sources as renewable/non-renewable

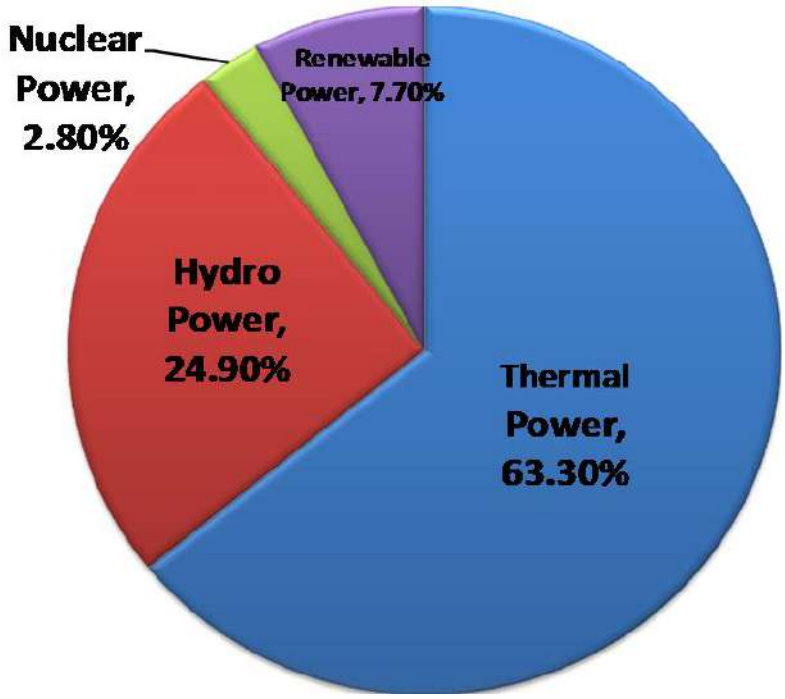

Figure 1.3 Energy contributions by various sources in India

1.2 Drawbacks of conventional energy sources

- **Conventional energy sources are not renewable:**

  As discussed in the above section, both the fossil fuels (coal, oil and natural gas) and nuclear fuels are not renewable. The reserves of these fuels will run out some day in the future. A long term energy development strategy is therefore important for sustainable and continuous economy growth.

- **Conventional generation technologies are not environmentally friendly:**

  Although there have been substantial improvements in the technologies for reducing emissions, conventional thermal power plants still produce a large amount of pollutant gases, such as sulphur oxide and nitrogen oxide [3]. The radioactive waste of nuclear power plants is always a big concern to the environment. The dams and reservoirs of hydropower can change the ecological systems of the original rivers and the regions of the reservoirs substantially [4].

- **The cost of using fossil and nuclear fuels will go higher and higher:**

  Since these fuel sources are not renewable, while the world energy demand is steadily increasing, it is obvious that the price of these fuels will go higher . Compared to natural gas and petroleum, coal is cheap for electricity generation. However, if the cost for reducing emissions is taken into account, the actual price of generating electricity from coal would be much higher.

- **Hydropower sources are not enough and the sites are normally far away from load centres:**

  Hydropower is good because, it is clean and renewable. However, in many developed countries, the hydropower has been almost explored fully. Moreover, hydroelectric sites normally are in remote areas. Long transmission lines add more difficulties and cost in exploring hydropower since the permission of the right-of-way for transmission lines is much more difficult to obtain than before.

- **Political and social concerns on safety are pushing nuclear power away:**

  In general, government energy strategy guides the development of nuclear power. There are almost no cases that corporations or utilities make the decisions to build nuclear power plants based on their economic considerations. Accidents at the Three Mile Island nuclear power plant in the United States in 1979, Chernobyl in the Soviet Union in 1986, and the recent disaster occurred in Japan in 2011 fed people full of fears. Nobody wants to be a neighbor of a nuclear power plant or facility. This changes the government energy policy substantially. In the countries like India, U.S., there is no new order for nuclear units in the near future [5].

1.3 Advantages of renewable energy sources

On the other hand, compared with conventional power generation technologies, alternative/renewable power have the following advantages:

- **Alternative energy resources are not only renewable, but also abundant:**

  For example, the total solar energy from sun in a day at the earth surface is about 1000 times more than the all fossil fuels consumption. It is a natural source of energy and can replenish itself easily over short period of time.

- **Fuel cell systems have high energy efficiency:**

  The efficiency of low temperature proton exchange membrane (PEM) fuel cells is around 35-45% [7]. High temperature solid oxide fuel cells (SOFC) can have efficiency as high as 65% [8]. The overall efficiency of an SOFC based combined-cycle system can even reach 70%, whereas the coal based conventional power generation has the efficiency around 30%.

- **Renewable energy systems are environmentally friendly:**

  From these systems, there is zero or low emission (of pollutant gases) that causes acid rain, urban smog and other health problems; and, therefore, there is no

environmental cleanup or waste disposal cost associated with them to prevent effects like global warming.

- **Different renewable energy sources can complement each other:**

  Though renewable energy resources are not evenly distributed throughout the world, every region has some kinds of renewable energy resources. At least, sunlight reaches every corner in the world. And different energy resources (such as solar and wind energy) can complement each other. This is important to improve energy security.

- **Easily accessible:**

  These renewable power generation systems normally have modular structure and can be installed close to load centers. Therefore, no high voltage transmission lines are needed for them to supply electricity.

- **Quite affordable:**

  Renewable energy is quite affordable and can be availed to many people as an alternative for non renewable sources at economical cost.

1.4 Constraints in existing layouts of Hybrid Power Systems

In general, inverter interfacing is used for the renewable energy sources to connect load/central grid to HPS. But, this architecture limits the application of HPS for grid connected mode. The limitations of the existing layouts of HPS are as follows.

- Since, these architectures require multiple stages of conversions causes for reduction in efficiency.
- Since, there is requirement of inverters and rectifiers in multiple levels, causes for inclusion of harmonics and hence, leads to low power quality generation system.
- Limit to islanding mode, not efficient for grid connecting mode due to this low power quality generation.
- Limitation in effective utilization of available resources and Limitation in terms of power generation capacities.
- May not meet sustained load demands because of environmental dependency.
- Frequency maintaining problems and Voltage fluctuations because of harmonics injection by inverters
- Limitations in fuel flexibility, efficiency, emissions, and economics.

One or more of these problems can be overcome in the proposed architecture of the HPS with proper energy management and control schemes

1.5 Resources Required

TABLE 1.2: SOFTWARE TOOLS REQUIRED

S. No.	Tool name	Description	Version
1	MATLAB/Simulink	Technical Computation language	R2009a & Above

1.6 Typical Applications

Typical applications of the proposed HPS model includes the areas where;

- There is no sufficient room for erecting conventional power plants,
- There is no availability of abundant fossil fuels,
- The weather conditions do not allow the operation of only one energy resource,
- There is sustaining load available more than the capacity, generated,
- There is islanding loads are dominant,
- There is higher efficiency and reliability is desired,
- Green energy generation is desired to control pollution.

1.7 Organization of the Dissertation

The summary report of the work deposed in this thesis is structured on several chapters, as follows:

Chapter-1 reviews the background literature survey about the constraints in the existing layouts of HPS. It also briefly states the objective of this dissertation, motivations, typical applications, and the tools required to execute the project.

Chapter-2 describes introduction to HPS, various components of HPS and working principles of various renewable energy sources.

Chapter-3 introduces the first major subject treated in this thesis, i.e. Hardware design of the proposed solar-piezo based hybrid charging system.

Chapter-4 presents the simulation results obtained in the case of proposed architecture of HPS. These results were based on the boost converter connected to the renewable energy sources.

Chapter-5 concludes the thesis and gives some guidelines for further work which would be possible due to the knowledge acquired during this study.

Chapter 2
DESCRIPTION OF HPS

2.1 Introduction to HPS

Over the past several years, power demand is immensely increasing in isolated mode or grid connected mode of applications continuously due to the growth in demands of various classes of consumers like domestic, industrial, agricultural, and etc. To meet this, various conventional power plants are operating by using fossil fuels as major resource. But in future, these resources may evaporate, and need to look for the availability of alternative energy sources, and hence renewable energy based hybrid power system is designed.

Combining several different types of power sources will forms a system, which is known as "Hybrid Power System". As mentioned earlier, HPS combines two or more energy conversion devices, or two or more fuels for the same device, that when integrated, overcome limitations inherent in either.

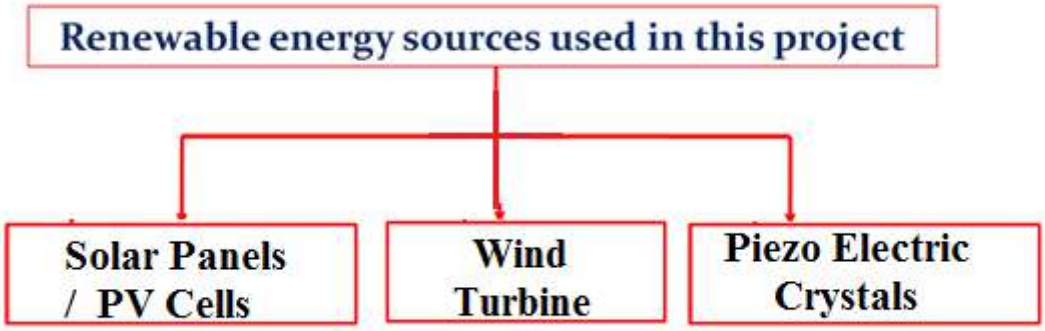

Figure 2.1 Different renewable energy sources used in the proposed HPS

HPS is available in two modes; namely islanding and grid connected modes. In general, a hybrid power system might contain AC diesel generators-diesel system, an AC or DC distribution system, renewable power sources, energy storage, power converters, dump loads, load management options, or a supervisory [9].

The proposed HPS in this thesis focuses on the combination of renewable energy sources as shown in Figure 2.1, such as Photovoltaic cells, Piezo electric crystals and Batteries. These are clean and abundantly available in nature, offers many advantages over conventional coal based power system, such as low pollution, high efficiency, diversity of fuels, reusability of exhausts, and onsite installation.

2.2 Importance of combined plants/HPS

In the present day everybody is looking towards renewable energy sources for their growing energy needs. In a single renewable power plant there are many difficulties in operating satisfactorily because, they are nature dependent sources. The output of these sources is not constant and varies with atmospheric conditions and needs a back-up such as batteries to take over the fluctuations of the system which is not economical. If a single source is operated, fluctuations in the output will affect the usage of that source. For example, if the generated power doesn't meet the fluctuations in load requirement then we cannot use that source and that amount of power generated is mere waste. So, to eliminate such drawbacks and utilize the generated power to its full extent, now the system is moved to Hybrid renewable system, where more than one energy sources are integrated and can take up the load fluctuations effectively with proper control strategies.

Hybrid power generation systems contain two or more power generation sources in order to balance each other's strengths and weaknesses. These sources in general can be split into two groups: controlled sources and uncontrolled sources. As controlled sources means primary energy sources giving possibility to control electrical power production, for example coal or fuels. It is obvious that power production of uncontrolled sources is unpredictable and human independent. Solar and piezo crystal power plants are uncontrolled sources. Whenever the power from one source, especially from nature dependent sources such as piezo/solar is varied, the deficit/surplus amount of power will be taken care by controlled source like fuel cells.

A three phase 50 Hz transformer is also required for the purpose of isolation and voltage matching between the central utility power grid and islanded hybrid power system. To be utility grid interactive, alternate energy source systems have to produce ac voltages at the inverter output of fixed magnitude and frequency even though the dc input is an unregulated source. An inverter control technique that will make the inverter output voltage immune to the variation in the input dc voltage.

The main objective of these hybrid systems is to extract maximum power at low costs with good power quality, low pollution, and reliable supply. Let us assume that Figure 2.2 shows the amount of power generated by the photovoltaic/piezo uncontrolled source.

When operating this uncontrolled photovoltaic/piezo power source alone, it could not meet the load demand always. Instead sometimes it can produce surplus power and for sometimes it will produce deficit power as shown in the Figure 2.2, where the load

requirement is assumed as 1.0 Pu, but the generated power swings above and below depending upon the environmental conditions in different seasons.

This problem could be solved by the combined operation of uncontrolled sources like solar/piezo with controlled sources like fuel cells respectively, by forming as the hybrid system. Here, the deficit power is compensated by the fuel cell as shown in Figure 2.3, by that it can meet the load requirements. Hence, by the combined operation the power generated by the solar panels/piezo mills is completely utilized under all possible circumstances with the help of controlled resource like fuel cell, and therefore ensuring continuous supply to loads. This improves plant's reliability at all the loading and input conditions.

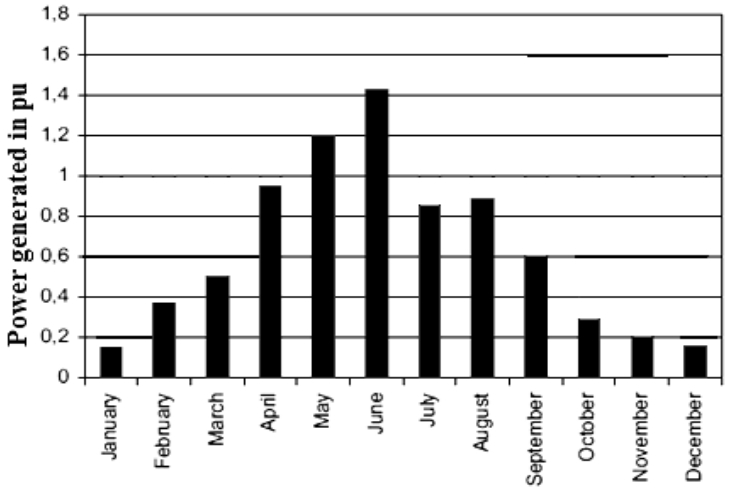

Figure 2.2 Typical data for solar power production for a year

2.3 Hybrid Power Systems Classification

HPS are classified in two categories:

- Grid connected HPS, which are connected in parallel with the central utility power grid and can be used at any location; and
- Stand alone/off grid/Islanding HPS, which are independent of the utility grid, used to meet the load demands especially at remote places.

2.3.1 Stand alone/off grid/Islanding HPS

Stand Alone HPS are designed and sized to attend specific loads. The power units commonly used are photovoltaic panels (DC source), piezo turbines and Diesel Generators (AC sources); batteries are often used for backup power. Other power electronics components like rectifiers, converters, and inverters are used to match the ac and dc generation source with the voltage and frequency requirements of the load. The control system for HPS

configurations should minimize fuel consumption by maximizing power from the renewable sources.

However, there are power fluctuations by the variability of the renewable energy, which cause disturbances that can affect the quality of the power delivered to the load.

2.3.2 Grid connected HPS

Many different types of grid connected HPS architecture have been practiced. The possible different architectures [9] are shown in Figure 2.5. Each system has its own advantages and disadvantages. The choice of the layout for particular location depends upon geographical, economical and technical factors. These are available in three modes namely centralized AC-bus architecture, distributed AC-bus architecture, and centralized DC-bus architecture.

In the centralized AC-bus architecture, the sources and the battery are all installed in one place and are connected to a main AC bus bar before being connected to the grid. This system is centralized in the sense that the power delivered by all the energy conversion systems and the battery is fed to the grid through a single point. In this case, the power produced by the PV system and the battery is inverted into AC before being connected to the main AC bus.

The energy conversion systems can also be connected to the grid in a decentralized manner called distributed AC-bus architecture. The power sources in this architecture do not need to be installed close to each other as in the case of centralized AC-bus architecture, and they do not need to be connected to one main bus bar. Otherwise, the sources are distributed in different geographical locations as appropriate and each source is connected to the grid separately. The power produced by each source is conditioned separately to be identical with the form required by the grid. The main disadvantage of this architecture is the difficulty of controlling the system when the diesel generator is in off mode.

The third architecture, i.e. centralized DC-bus architecture utilizes a main centralized DC bus bar. So, the energy conversion systems that produce AC power, namely the piezo energy converter and the diesel generator, firstly deliver their power to rectifiers to be converted into DC before it is being delivered to the main DC bus bar. A main inverter takes the responsibility of feeding the AC grid from this DC bus.

As mentioned above, the grid connected HPS, which is going to be investigated, consists of renewable energy sources such as Photovoltaic cells, Fuel cells, Piezo energy, and Batteries as the main components. Most of these (PV, Fuel cell, Batteries) are producing DC output. Hence, the centralised DC-bus architecture for grid connected HPS has been chosen

for this research work, to modify it according to the proposal for the improvement of power quality.

2.4 Proposed HPS architecture

2.4.1 Novelty in the design

In the proposed system, the output of the renewable sources cannot feed the load directly, because their voltage fluctuations are so large that they will damage the concerned load. So first it needs to be conditioned, for which DC-DC/AC-DC converters are used [10], [11]. Thus the varying voltage can be brought to required value and specified variation limits by varying the duty ratio of the converters, and then connected to the DC bus.

The DC bus voltage is now used to drive the DC motor coupled to the synchronous generator. Electrical power should be produced exactly at the same time when it is demanded by various classes of consumers. It may not be possible for renewable energy sources to produce sufficient energy to drive the DC motor coupled to a synchronous generator all the time, since their operation depends on varying natural conditions.

It is obvious that Piezo Crystal output power varies with the foot steps, the PV cell output power varies with both the temperature and irradiance, and FC output power varies with input fuel. So, a diesel engine is also coupled to synchronous generator to avoid shortages of power and hence improves supply reliability.

Modeling and simulations for both islanding mode and central grid connected mode are conducted using MATLAB / Simulink to verify the effectiveness of the proposed system.

2.5 HPS components

All the constituents like PV cells, Piezo electric crystals, DC-DC Boost converters, Inverter, Local controllers like frequency controller, and etc.., are individually modeled and interfaced for HPS design.

2.5.1 Photovoltaic Cell

Solar energy is produced by converting light (photons) into electrical propulsion known as the photovoltaic effect (PV). Contained within photon of light contains the number or rate of energy varies depending on the wavelength and spectrum of solar generated. When the photon is in violation or in contact with the solar panel, solar panels will absorb photons in some degree not all photons are absorbed by the solar panels because it depends on the type of semiconductor materials used to produce the solar panels.

At certain levels, Photon energy has the capacity to dissolve the bonding electrons from atoms to produce electricity. Quantity of the energy produce is difference between materials with other material in the production of solar cells. This energy level is known as band-gap energy which is measured in units of electron-volts. A material with band-gap energy between 1eV and 1.8 eV are the best material and have a high efficiency of energy production.

2.5.1.1 PV Panel Basics

Photovoltaic (PV) cells are made of special materials called semiconductors such as silicon, which is currently the most commonly used. Basically, when light strikes the cell, a certain portion of it is absorbed within the semiconductor material. This means that the energy of the absorbed light is transferred to the semiconductor. The energy knocks electrons loose, allowing them to flow freely. PV cells also all have one or more electric fields that act to force electrons freed by light absorption to flow in a certain direction. This flow of electrons is a current, and by placing metal contacts on the top and bottom of the PV cell, we can draw that current off to use externally. For example, the current can power a calculator. This current, together with the cell's voltage (which is a result of its built-in electric field or fields), defines the power (or wattage) that the solar cell can produce.

Photovoltaic/solar cell is the device which converts sunlight into electricity directly of which magnitude of current and voltage depends on many factors like temperature, solar irradiation, and wave length of incident photon etc. the solar cell produces DC supply. A solar cell module is the basic element of each photovoltaic system. It consists of many jointly connected solar cells. A number of solar cell models have been developed, but the one diode electrical equivalent circuit is commonly used It consists of a diode, a current source, a series resistance and a parallel resistance. The current source generates the photo-current that is a function of the incident solar cell radiation and temperature.

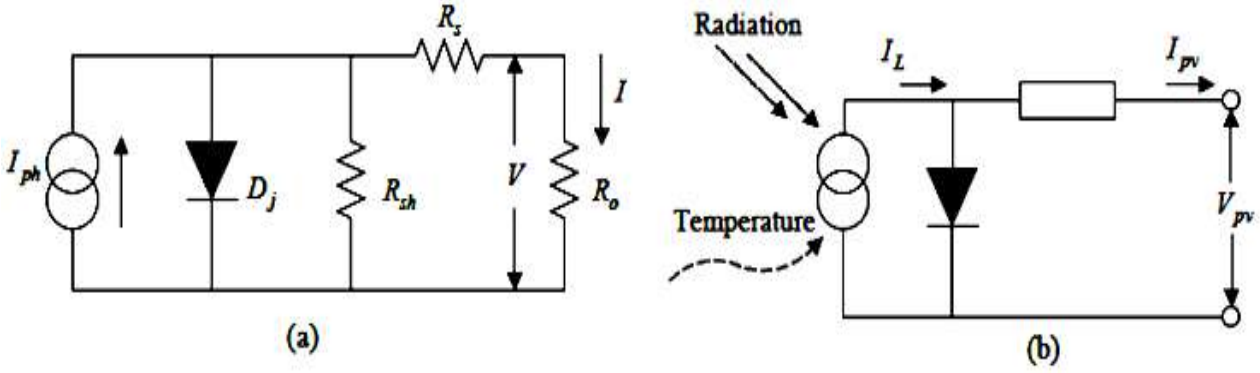

Figure 2.3 Solar cell (a) equivalent circuit (b) simplified circuit

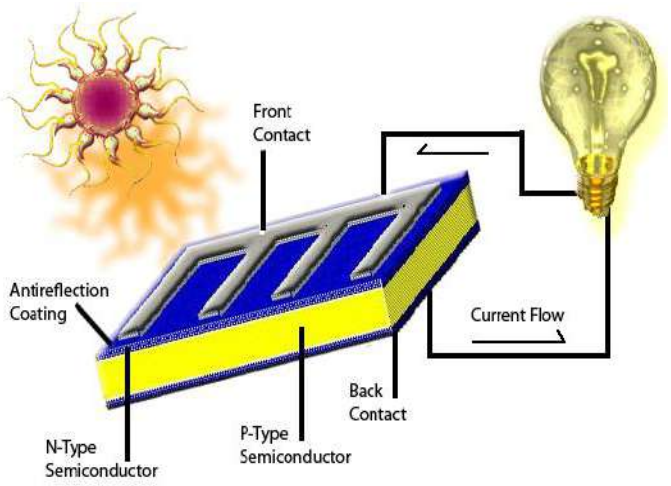

Fig 2.4 Concept of PV generating system

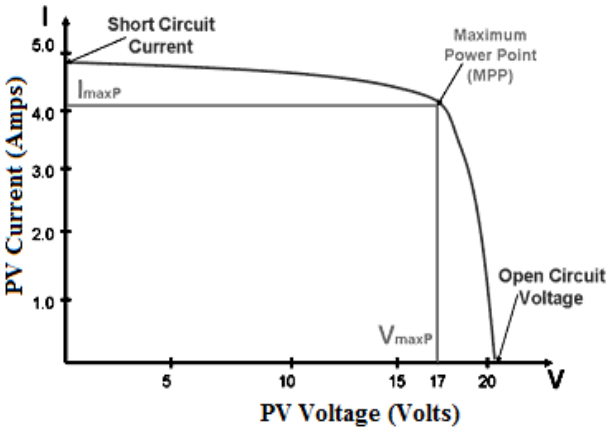

Figure 2.5 PV array V-I characteristics

The diode represents the p-n junction of a solar cell. The temperature dependence of the diode saturation current and constant diode ideality factor are included in the modeling. At real solar cells, a voltage loss on the way to the external contacts is observed. This voltage loss is expressed by a series resistance (R_s). Furthermore leakage currents are described by a parallel resistance (R_{sh}). However, the series resistance is very small and the parallel resistance is very large. So we can ignore Rs and R_{sh}. The solar cell simplified circuit is shown in Figure.2.3. The typical PV characteristics are shown in Figure.2.5.

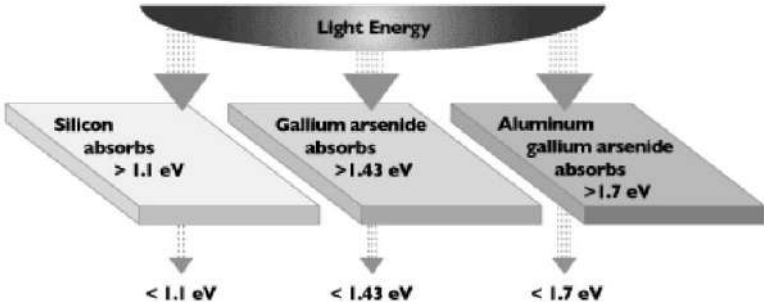

Fig 2.6 Properties of various semiconductor materials

How Solar Panels Work?

- Rays of sunlight hit the solar panel (also known as a photovoltaic/ (PV) cells) and are absorbed by semi-conducting materials such as silicone.
- Electrons are knocked loose from their atoms, which allow them to flow through the material to produce electricity. This process whereby light (photo) is converted into electricity (voltage) is called the photovoltaic (PV) effect.
- An array of solar panels converts solar energy into DC (direct current) electricity.
- The DC electricity then enters an inverter.
- The inverter turns DC electricity into 120-volt AC (alternating current) electricity needed by home appliances.
- The AC power enters the utility panel in the house.
- The electricity (load) is then distributed to appliances or lights in the house.
- When more solar energy is generated that what you're using - it can be stored in a battery as DC electricity. The battery will continue to supply your home with electricity in the event of a power blackout or at nighttime.
- When the battery is full the excess electricity can be exported back into the utility grid, if your system is connected to it.
- Utility supplied electricity can also be drawn from the grid when not enough solar energy is produced and no excess energy is stored in the battery, i.e. at night or on cloudy days.
- The flow of electricity in and out of the utility grid is measured by a utility meter, which spins backwards (when you are producing more energy that you need) and forward (when you require additional electricity from the utility company). The two are offset ensuring that you only pay for the additional energy you use from the utility company. Any surplus energy is sold back to the utility company. This system is referred to as "net-metering".
- Solar Energy is measured in kilowatt-hour. 1 kilowatt = 1000 watts.
- 1 kilowatt-hour (kWh) = the amount of electricity required to burn a 100 watt light bulb for 10 hours.
- About 30% of our total energy consumption is used to heat water.

THE SUN produces radiant energy by consuming hydrogen in nuclear fusion reactions. Solar energy is transmitted to the earth in portions of energy called photons, which interact with the earth's atmosphere and surface. It takes about 8 minutes and 20 seconds for the sun's energy to reach the earth.	
THE EARTH receives and collects solar energy in the atmosphere, oceans, and plant life. Interactions between the sun's energy, the oceans, and the atmosphere, for example, create winds, which can produce electricity when directed through aerodynamically designed wind machines.	
SOLAR PHOTOVOLTAIC CELLS convert solar radiation into electricity (photovoltaic literally means "light energy"; "photo" = light, "voltaic" = energy). Individual cells are packaged into modules, like the one shown at the right; groups of modules are called arrays. Photovoltaic arrays act like a battery when the sun is shining, producing a stream of direct current (DC) electricity and sending it into the building or sharing it with the grid.	
THE DC DISCONNECT SWITCH allows professional electricians to disconnect the photovoltaic array from the rest of the system. With the switch in the "off" position, workers can safely perform maintenance on other system components.	
THE INVERTER converts direct current (DC) electricity generated by the array into alternating current (AC) electricity for use in the building. Most electrical loads (energy-consuming devices like lights, motors, computers, and air conditioners) in schools, homes and businesses use AC electricity.	
THE TRANSFORMER ensures that the voltage of the electricity coming from the inverter is compatible with the voltage of the electricity in the building.	

THE AC DISCONNECT disconnect switch allows professional electricians to disconnect the building's electrical system from the solar photovoltaic system. With the AC disconnect switch in the "off" position, workers can safely perform maintenance on the solar photovoltaic system's components.	
THE ELECTRIC METER keeps track of the amount of electrical energy produced by the solar photovoltaic system and sends electronic signals to the data acquisition system where they are recorded. Electrical energy is measured in kilowatt-hours.	

2.5.1.2 Temperature effect on solar cell characteristics

Temperature affects the characteristic equation 2.1 in two ways: directly, by '*T'* in the exponential term, and indirectly by its effect on I_0 (strictly speaking, temperature affects all of the terms, but these two far more significantly than the others). While increasing '*T'* reduces the magnitude of the exponent in the characteristic equation, the value of 'I_0' increases exponentially with *T*. The net effect is to reduce 'V_{OC}' (the open-circuit voltage) linearly with increasing temperature as shown in Figure 2.8. The magnitude of this reduction is inversely proportional to V_{OC}; that is, cells with higher values of V_{OC} suffer smaller reductions in voltage with increasing temperature. For most crystalline silicon solar cells the reduction is about 0.50%/°C, though the rate for the highest-efficiency crystalline silicon cells is around 0.35%/°C. By way of comparison, the rate for amorphous silicon solar cells is 0.20-0.30%/°C, depending on how the cell is made.

The amount of photo generated current 'I_L' increases slightly with increasing temperature because of an increase in the number of thermally generated carriers in the cell. This effect is slight, however about 0.065%/°C for crystalline silicon cells and 0.09% for amorphous silicon cells. From the Figure 2.5 it can be clearly observed that the voltage generated by the panel has been reduced as the temperature is increasing, but the current change is very little and increasing and total power will be reduced with the change in temperature.

$$I = I_L - I_0\left\{\exp\left[\frac{q(V+IR_S)}{nKT}\right]-1\right\} - \frac{V+IR_S}{R_{Sh}} \qquad (2.1)$$

Open circuit voltage $V_{OC} = \frac{KT}{q}\ln\left(\frac{I_L}{I_0}+1\right)$ (2.2)

Short circuit current $I_{SC} \approx I_L$ (2.3)

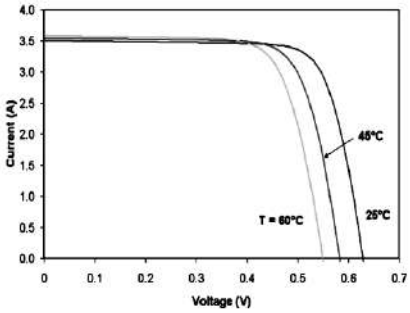

Figure 2.8 V-I Characteristics of PV panel for change in temperature

2.5.1.3 Irradiation effect on solar cell characteristics

The PV panel's output current is proportional to the solar radiation that strikes it. For the given amount of solar panel area the output is varied with change in incident solar radiation (insolation) as shown in Figure 2.7.

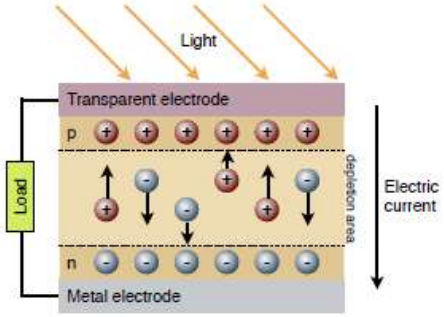

Fig 2.9 P–n junction silicon solar cell structure

If the insolation is high, current generated will be high and vice versa, but the voltage affected will be negligibly small so, the power change is all depends upon change in current. It is important to understand that this radiation level is reduced if the panel is not pointing directly at the sun. Like other parts of this problem, the amount that it is reduced can be calculated. The cell's output must be multiplied by the cosine of the angle of incidence of the incoming light.

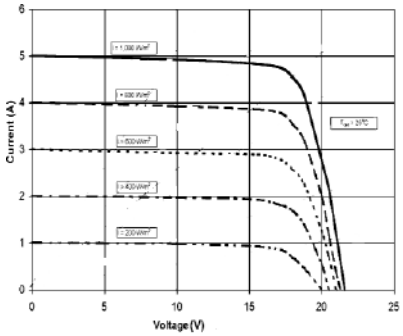

Figure 2.10 V-I characteristics of PV panel for change in irradiation

2.5.1.4 Maximum-power point tracking

A solar cell may operate over a wide range of voltages (V) and currents (I). By increasing the resistive load on an irradiated cell continuously from zero (a short circuit) to a very high value (an open circuit) one can determine the maximum-power point, the point that maximizes V×I; that is, the load for which the cell can deliver maximum electrical power at that level of irradiation. (The output power is zero in both the short circuit and open circuit extremes).

The maximum power point of a photovoltaic varies with incident illumination. For systems large enough to justify the extra expense, a maximum power point tracker tracks the instantaneous power by continually measuring the voltage and current (and hence, power transfer), and uses this information to dynamically adjust the load so the maximum power is always transferred, regardless of the variation in lighting. Figure 2.8 shows the P-V characteristic of solar panel with Maximum Power Point (MPP).

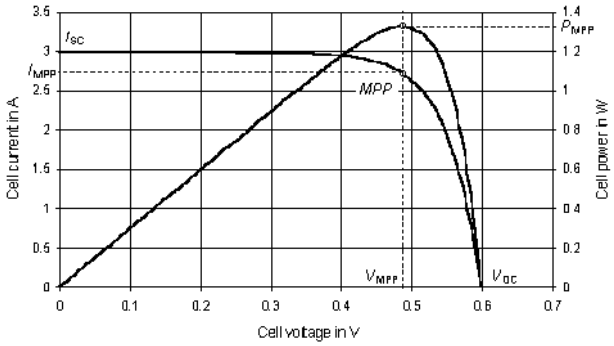

Figure 2.11 P-V/I characteristic of solar panel with MPPT

2.6 Types of DC-DC Converters

There are three kinds of switching mode DC-DC converters [11], buck, boost and buck-boost. The buck mode is used to reduce output voltage, whilst the boost mode can increase the output voltage. In the buck-boost mode, the output voltage can be maintained either higher or lower than the source but in the opposite

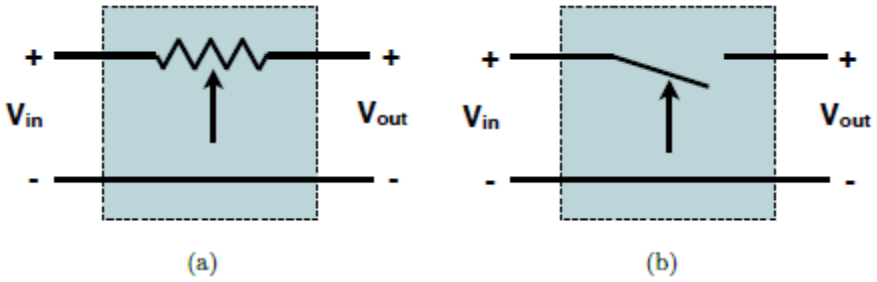

Fig 2.12 Principle schematic of DC–DC voltage converters, (a) is a linear regulator, (b) is a switching regulator.

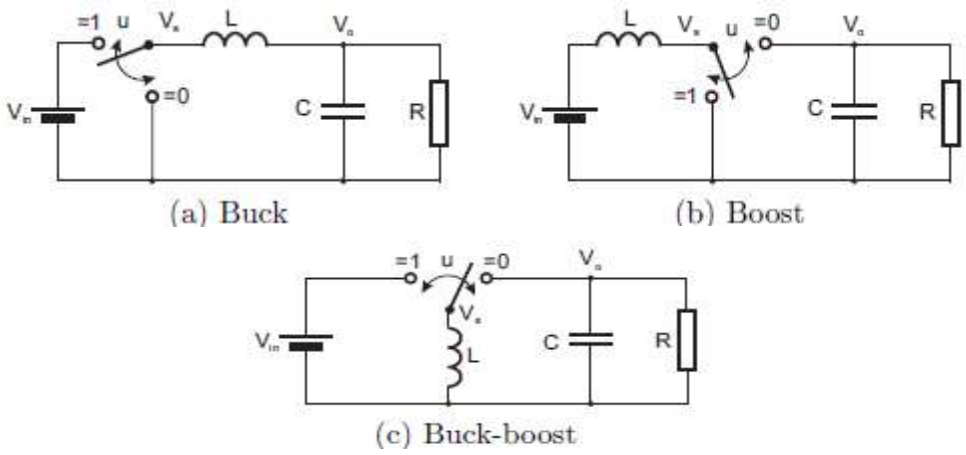

Fig.2.13 Types of switching regulators- Buck, Boost, Buck-Boost Converter Equivalent Circuit Diagram

These converters consist of the same components, an inductor, L, a capacitor, C and a switch, which has two states u = 1and u = 0. All converters connect to a DC power source with a voltage (unregulated), V_{in} and provide a regulated voltage, V_o to the load resistor, R by controlling the state of the switch. In some situations, the load also could be inductive, for example a DC motor, or approximately, a current load, for example in a cascade configuration. For simplicity, here, only current and resistive loads are to be considered.

2.6.1Working Principles

The working principles of the DC-DC converters can be explained as follows. In the buck mode, when the switch is on position 1, the DC source supplies power to the circuit which results an output voltage across the resistor. When the switch changes its position to 0, the energy stored in the inductor and capacitor will discharge through the resistor. Appropriately controlling the switching position can maintain the output voltage at a desired level lower than the source.

In the boost mode, when the switch is on position 1, the circuit is separated into two parts: on the left, the source is charging the inductor; meanwhile the capacitor on the right maintains the output voltage using previously stored energy. When the switch changes its position to 0, both the DC source and energy stored in the inductor will supply power to the circuit on the right, hence boost the output voltage. Again, the output voltage can be maintained at desired level by controlling the switching sequence. Finally, for the buck-boost mode, switch positions 1 and 0 represents charging and discharging modes of the inductor. Appropriately controlling the switching sequence can result in output voltage higher or lower than the DC source.

2.6.2 Chopper

A chopper is a static device that converts fixed DC input voltage to a variable DC output voltage directly. A chopper is a high speed ON/OFF semi-conductor switch. It connects the source to load and disconnects the load from source at a fast speed. In this manner a chopped load voltage is obtained.

A chopper may be thought of DC equivalent of an AC transformer having continuously variable turns ratio. Like a transformer, a chopper can be used to step down or step up the fixed d.c input voltage. If the averaged output voltage is less than the supply voltage then it is a step down chopper and is known as a buck chopper. If the averaged output voltage is greater than the supply voltage then it is a step up chopper and is known as a boost chopper.

Operation of Boost Chopper:

The fig. 2.9 illustrates an elementary form of a step up chopper, called as Boost chopper.

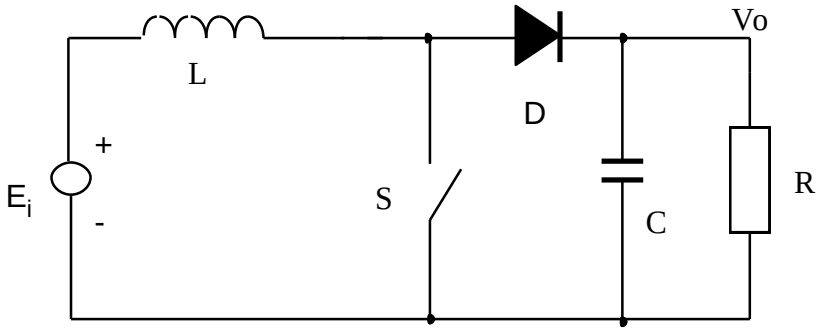

Fig. 2.14 Boost chopper circuit

In this chopper, a large inductor L, in series with source voltage Vs is essential as shown in Fig. 2.9. When the chopper is ON, i.e.., during the period Ton the inductor stores energy as there is closed current path and the load voltage Vo is zero. During the interval Toff as the inductor current cannot die out instantaneously, this current is forced through the diode and load. As a result, voltage across the load is given as,

$$\mathbf{V_0 = V_S + L\frac{di}{dt}}$$

which exceeds the source voltage Vs indicating a step up chopper.

The expression for the output voltage of a boost chopper can be given as,

$$\mathbf{V_0 = V_S \frac{T}{T - T_{ON}} = \frac{1}{1-\alpha} V_S}$$

Where $T = T_{ON} + T_{OFF}$

2.7 Piezo electric crystals

Piezoelectric materials belong to a broader class called ferroelectrics. One of the defining traits of a ferroelectric material is that the molecular structure is oriented such that the material has local charge separations, known as electric dipoles. Piezoelectric materials have two main functions. The first function is the direct piezoelectric effect, which is the transformation of mechanical strain into electrical charge. The second function, called the converse piezoelectric effect, takes an applied electrical potential and converts to mechanical strain. Therefore, an electric field can be applied to induce an expansion or contraction of the material and vice versa.

The mechanical vibrations which are produced by the automobiles can be utilized as a source of energy for generating electrical energy that can be utilized by this electronic equipment to operate. These vibrations are produced by different vehicles around us which are going as a waste. Piezoelectric materials is used by this technique, where deformations done by the vibrations are directly converted into the electrical charge via piezoelectric effect and principle of electromagnetic induction between coil and magnetic field that produces Electromotive force (EMF) in the coil and so it provides displacement to the performance magnet by the vibrations. All the piezoelectric materials and magnets are used as the energy conversion devices for converting mechanical vibrations into electrical energy. In this context, we introduced two methods and considered its output performance provided input vibrations, by using piezoelectric materials such as piezoelectric for electromechanically conversion using Mass- spring system as medium of conversion of force from vibrations applied on piezoelectric materials and by using spring-magnet system where relative displacement of magnet with respect to coil, provided input vibrations generates Electromotive force in coil.

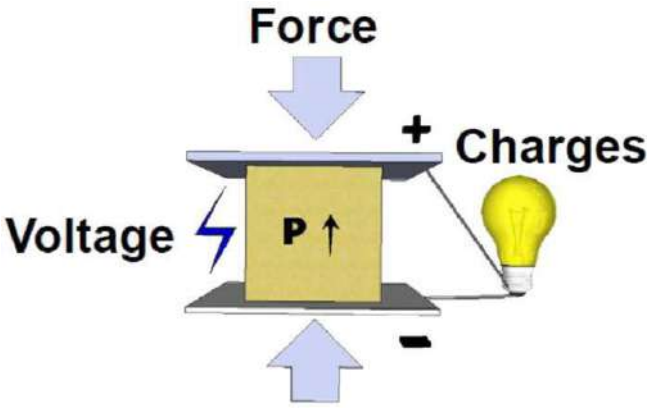

Fig 2.15 Concept of Piezo crystal

The piezoelectric effect occurs due to the material's electric dipoles. Dipoles are represented as vectors pointing from the positive to the negative charges. Groups of aligned dipoles are called Weiss domains. In a piezo ceramic material, which are materials that are not inherently piezoelectric like naturally-occurring piezoelectric crystals, but rather can be manipulated to exhibit piezoelectric behavior, the Weiss domains are not aligned, and the overall material has no net polarization. After applying an electric field, the domains align themselves in the direction of the field, creating a polarization. When the field is removed, the material cannot return to its original structure, but rather a more organized structure which allows for the material to exhibit the piezoelectric effects like a normal crystal. Applying mechanical stress to this newly piezoelectric material disrupts the orientation of the dipoles, realigning them as they were during polarization with the applied electric field and bringing about a polarization which creates a potential difference across the material. This voltage drop allows charge to flow between the two poles in order to realign the dipoles, thus generating a current. Additionally, the applied pressure and the generated energy have a direct relationship in which increasing the pressure will also increase the energy output.

2.8 Application of Piezo electrics to Electronic Devices

Piezoelectricity is the electric charge that accumulates in certain solid materials in response to applied mechanical stress. The word piezoelectricity means electricity resulting from pressure. A piezoelectric sensor is a device that uses the piezoelectric effect to measure pressure, acceleration, strain or force by converting them to an electrical signal. Piezoelectric materials exhibit the unique property known as the piezoelectric effect. When these materials are subjected to a compressive or tensile stress, an electric field is generated across the material, creating a voltage gradient and a subsequent current flow. This effect stems from the asymmetric nature of their unit cell when a stress is applied. As seen in Figure 1, the unit cell contains a small positively charges particle in the center. When a stress is applied this particle becomes shifted in one direction which creates a charge distribution, and subsequent electric field. These materials come in several different forms. The most common is crystals, but they are also found as plastics and ceramics.

2.8.1 Power Generation and Storage

When considering the possibilities for energy generation from a piezoelectric device, energy storage is a major hurdle. Once mechanical energy is converted to electrical energy, it can either be used directly or stored in a battery. For any normal touch screen device to operate, it needs a constant direct current (DC) power source. This is true of modern computers, smart phones, and any other electronic device that uses a battery. For the purposes

of a non-resonant piezoelectric power generation device, the energy must be stored. A piezoelectric touch screen is non-resonant because it experiences irregular excitation and does not generate a steady signal; therefore, it is not a suitable direct power source. Therefore, any attempts to produce and use energy from this touch screen must be stored in a battery that is representative of batteries in modern touch screen devices. It may be possible to make use of similar circuitry to charge a battery with non-resonant mechanical deformations.

2.8.2 Harvesting of Vibrations

Harvesting of Piezoelectric Energy is based upon the piezoelectric effect. The essence of the piezoelectric effect works as follows: by applying a mechanical stress to a crystal, one can generate a voltage or potential energy difference, and thus a current. Piezoelectric generator principle states that the conversion chain starts from vibration for which a mechanical energy source is required. The vibrations are converted into electricity via piezoelectric element. The electricity produced is then afterward formatted by a static converter before supplying the load (electrical device).Piezoelectric generators work due to the piezoelectric effect. This is the ability of certain materials to create electrical potential when responding to mechanical changes. To make it simpler, we can say that when compressed or expanded or while changing shape a piezoelectric material will give output as some voltage.

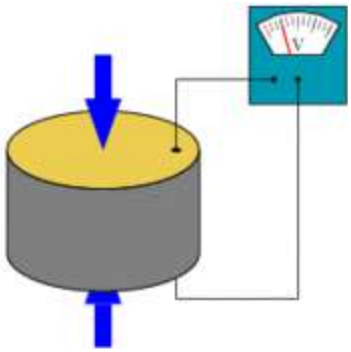

Fig 2.16 power generation using Piezo crystal

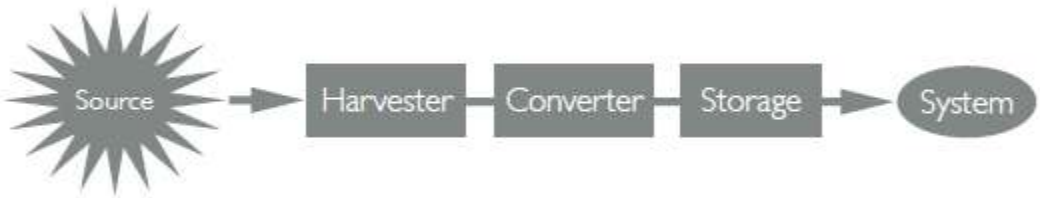

Fig 2.17 Typical energy harvesting system

Vibrational harvesting can be used whenever there is a movement. Vibrations are especially available in transportation industry and in industrial machineries. There are three

types of harvester mechanisms: piezoelectric, electromagnetic and electrostatic. Piezoelectric harvester works using a piezoelectric material (or piezo) that accumulates charge when strained and consequently produces a voltage . A piezo can be connected to a button that generates power when stroke it, or can be fixed to one side and connected to free moving mass to the other. Electromagnetic harvester transforms kinetic movement in electric energy, when a coil is moved around a permanent magnetic field, generating in this way a voltage difference.

Electrostatic harvester converts the mechanical energy generated by the movements of two capacitor plates inside a MEMS (Micro Electro–Mechanical Systems) into electrical energy. The plates movements can be both horizontal and vertical, allowing this device to be useful for three dimensional vibrations. Energy inside a capacitor is equal to E = 1/2CV 2 and the charge is Q = CV , in this way, when applying a constant charge on the capacitor plates, a capacitance variation produces energy variation to supply the load. The main constraint with vibrational harvester is the output current, due to their vibrational nature, the current produced is alternate (AC), for this reason a rectifier must be integrated in the circuit design to convert it to a direct current (DC) level. Furthermore, all vibrating systems has a specific resonance frequency at which the AC oscillates, at this frequency the power is maximum, if the harvester is not working at this specific frequency the energy generated will be very low. As consequence, the rectifier must work at the resonance frequency on the AC side. Piezoelectric devices are easy to fabricate and cheap, they can also be integrated on chips as well as electrostatic devices. The electromagnetic generators can generate high output–current levels but the voltage is very low (typically <1V). Both piezo and electromagnetic harvesting techniques have been shown to be capable of delivering power to the load in the range of μW to mW [3].

CHAPTER 3

HARDWARE DESIGN

3.1 Hardware Components

- Voltage Regulator (Lm 7805)
- Filter
- Rectifier
- Relay
- Led
- IN4007
- Resistors
- Capacitors
- Piezo Sesnor
- Atmega 328

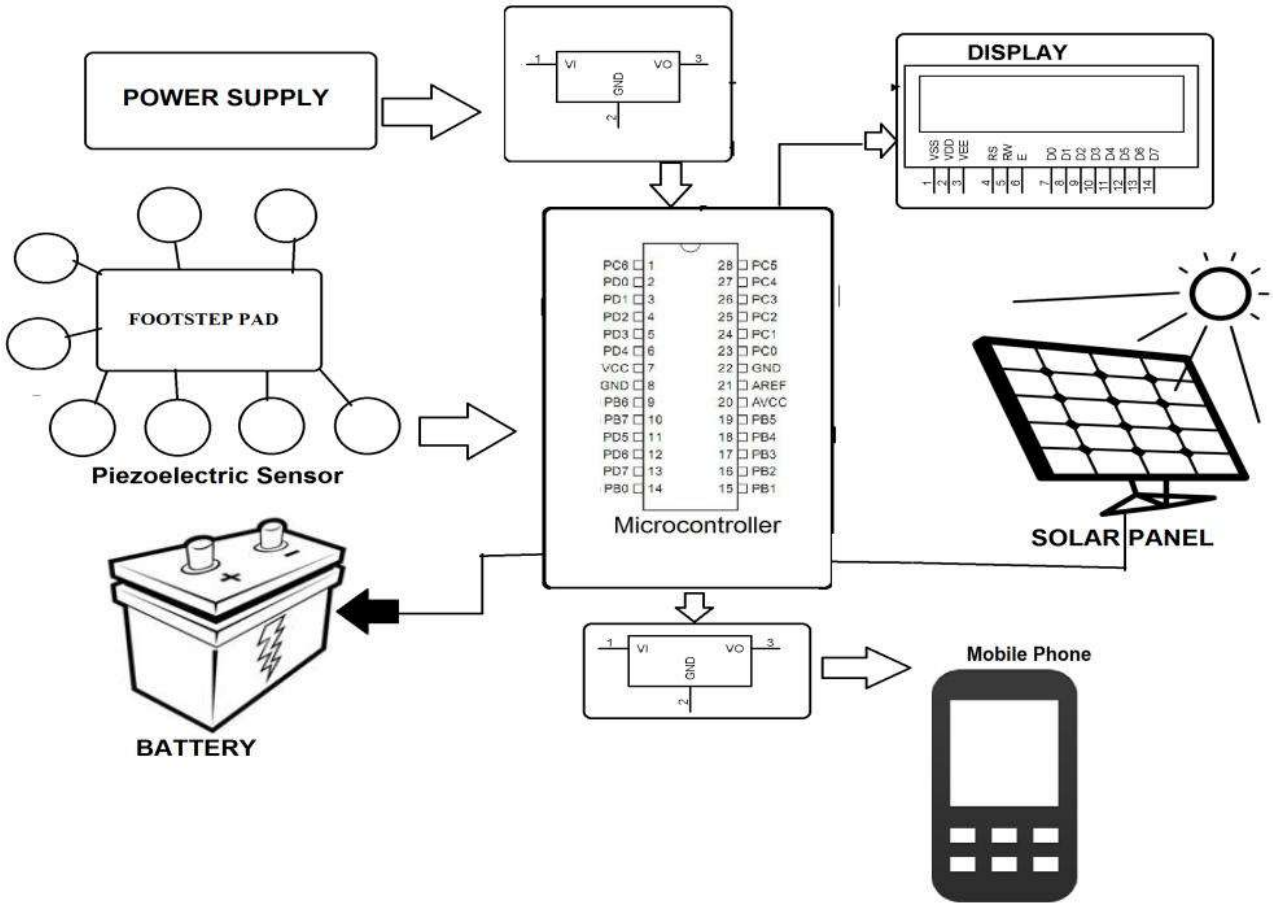

Fig 3.1 Block diagram of the proposed charging system

3.2 ARDUINO

Arduino is an open-source prototyping platform based on easy-to-use hardware and software. Arduino boards are able to read inputs - light on a sensor, a finger on a button, or a Twitter message - and turn it into an output - activating a motor, turning on an LED, publishing something online. You can tell your board what to do by sending a set of instructions to the microcontroller on the board. To do so you use the Arduino programming language (based onWiring), and the Arduino Software (IDE), based on Processing. Over the years, Arduino has been the brain of thousands of projects, from everyday objects to complex scientific instruments. A worldwide community of makers - students, hobbyists, artists, programmers, and professionals - has gathered around this open-source platform, their contributions have added up to an incredible amount of accessible knowledge that can be of great help to novices and experts alike.

Arduino was born at the Ivrea Interaction Design Institute as an easy tool for fast prototyping, aimed at students without a background in electronics and programming. As soon as it reached a wider community, the Arduino board started changing to adapt to new needs and challenges, differentiating its offer from simple 8-bit boards to products for IoT applications, wearable, 3D printing, and embedded environments. All Arduino boards are completely open-source, empowering users to build them independently and eventually adapt them to their particular needs. The software, too, is open-source, and it is growing through the contributions of users worldwide.

Why Arduino?

Thanks to its simple and accessible user experience, Arduino has been used in thousands of different projects and applications. The Arduino software is easy-to-use for beginners, yet flexible enough for advanced users. It runs on Mac, Windows, and Linux. Teachers and students use it to build low cost scientific instruments, to prove chemistry and physics principles, or to get started with programming and robotics.

Designers and architects build interactive prototypes, musicians and artists use it for installations and to experiment with new musical instruments. Makers, of course, use it to build many of the projects exhibited at the Maker Faire, for example. Arduino is a key tool to learn new things. Anyone - children, hobbyists, artists, programmers - can start tinkering just

following the step by step instructions of a kit, or sharing ideas online with other members of the Arduino community.

There are many other microcontrollers and microcontroller platforms available for physical computing. Parallax Basic Stamp, Netmedia's BX-24, Phidgets, MIT's Handyboard, and many others offer similar functionality. All of these tools take the messy details of microcontroller programming and wrap it up in an easy-to-use package. Arduino also simplifies the process of working with microcontrollers, but it offers some advantage for teachers, students, and interested amateurs over other systems:

- **Inexpensive** - Arduino boards are relatively inexpensive compared to other microcontroller platforms. The least expensive version of the Arduino module can be assembled by hand, and even the pre-assembled Arduino modules cost less.
- **Cross-platform** - The Arduino Software (IDE) runs on Windows, Macintosh OSX, and Linux operating systems. Most microcontroller systems are limited to Windows.
- **Simple, clear programming environment** - The Arduino Software (IDE) is easy-to-use for beginners, yet flexible enough for advanced users to take advantage of as well. For teachers, it's conveniently based on the Processing programming environment, so students learning to program in that environment will be familiar with how the Arduino IDE works.
- **Open source and extensible software** - The Arduino software is published as open source tools, available for extension by experienced programmers. The language can be expanded through C++ libraries, and people wanting to understand the technical details can make the leap from Arduino to the AVR C programming language on which it's based. Similarly, you can add AVR-C code directly into your Arduino programs if you want to.
- **Open source and extensible hardware** - The plans of the Arduino boards are published under a Creative Commons license, so experienced circuit designers can make their own version of the module, extending it and improving it. Even relatively inexperienced users can build the breadboard version of the module in order to understand how it works and save money.

Arduino Uno

The most common version of Arduino is the Arduino Uno. This board is what most people are talking about when they refer to an Arduino. In the next step, there is a more complete rundown of its features. Arduino NG, Diecimila, and the Duemilanove (Legacy Versions)

Legacy versions of the Arduino Uno product line consist of the NG, Diecimila, and the Duemilanove. The important thing to note about legacy boards is that they lack particular feature of the Arduino Uno. Some key differences:

- The Diecimila and NG use an ATMEGA168 chips (as opposed to the more powerful ATMEGA328),
- Both the Diecimila and NG have a jumper next to the USB port and require manual selection of either USB or battery power.
- The Arduino NG requires that you hold the rest button on the board for a few seconds prior to uploading a program.

Arduino Mega 2560

The Mega is the second most commonly encountered version of the Arduino family. The Arduino Mega is like the Arduino Uno's beefier older brother. It boasts 256 KB of memory (8 times more than the Uno). It also had 54 input and output pins, 16 of which are analog pins, and 14 of which can do PWM. However, all of the added functionality comes at the cost of a slightly larger circuit board. It may make your project more powerful, but it will also make your project larger. Check out the official Arduino Mega 2560 page for more details.

Arduino Mega ADK

This specialized version of the Arduino is basically an Arduino Mega that has been specifically designed for interfacing with Android smartphones.

Arduino LilyPad

The LilyPad was designed for wearable and e-textile applications. It is intended to be sewn to fabric and connected to other sewable components using conductive thread. This

board requires the use of a special FTDI-USB TTL serial programming cable. For more information, the Arduino LilyPad page is a decent starting point.

Some people think of the entire Arduino board as a microcontroller, but this is inaccurate. The Arduino board actually is a specially designed circuit board for programming and prototyping with Atmel microcontrollers. The nice thing about the Arduino board is that it is relatively cheap, plugs straight into a computer's USB port, and it is dead-simple to setup and use (compared to other development boards).

Some of the key features of the Arduino Uno include:

- **An open source design:** The advantage of it being open source is that it has a large community of people using and troubleshooting it. This makes it easy to find someone to help you debug your projects.
- **An easy USB interface:** The chip on the board plugs straight into your USB port and registers on your computer as a virtual serial port. This allows you to interface with it as through it were a serial device. The benefit of this setup is that serial communication is an extremely easy (and time-tested) protocol, and USB makes connecting it to modern computers really convenient.
- Very convenient power management and built-in voltage regulation. You can connect an external power source of up to 12v and it will regulate it to both 5v and 3.3v. It also can be powered directly off of a USB port without any external power.
- An easy-to-find, and dirt cheap, microcontroller "brain." It has countless number of nice hardware features like timers, PWM pins, external and internal interrupts, and multiple sleep modes. Check out the official datasheet for more details.
- A 16mhz clock. This makes it not the speediest microcontroller around, but fast enough for most applications.
- 32 KB of flash memory for storing your code.
- 13 digital pins and 6 analog pins. These pins allow you to connect external hardware to your Arduino. These pins are key for extending the computing capability of the Arduino into the real world. Simply plug your devices and sensors into the sockets that correspond to each of these pins and you are good to go.
- An ICSP connector for bypassing the USB port and interfacing the Arduino directly as a serial device. This port is necessary to re-bootload your chip if it corrupts and can no longer talk to your computer.

- An on-board LED attached to digital pin 13 for fast an easy debugging of code.
- And last, but not least, a button to reset the program on the chip.

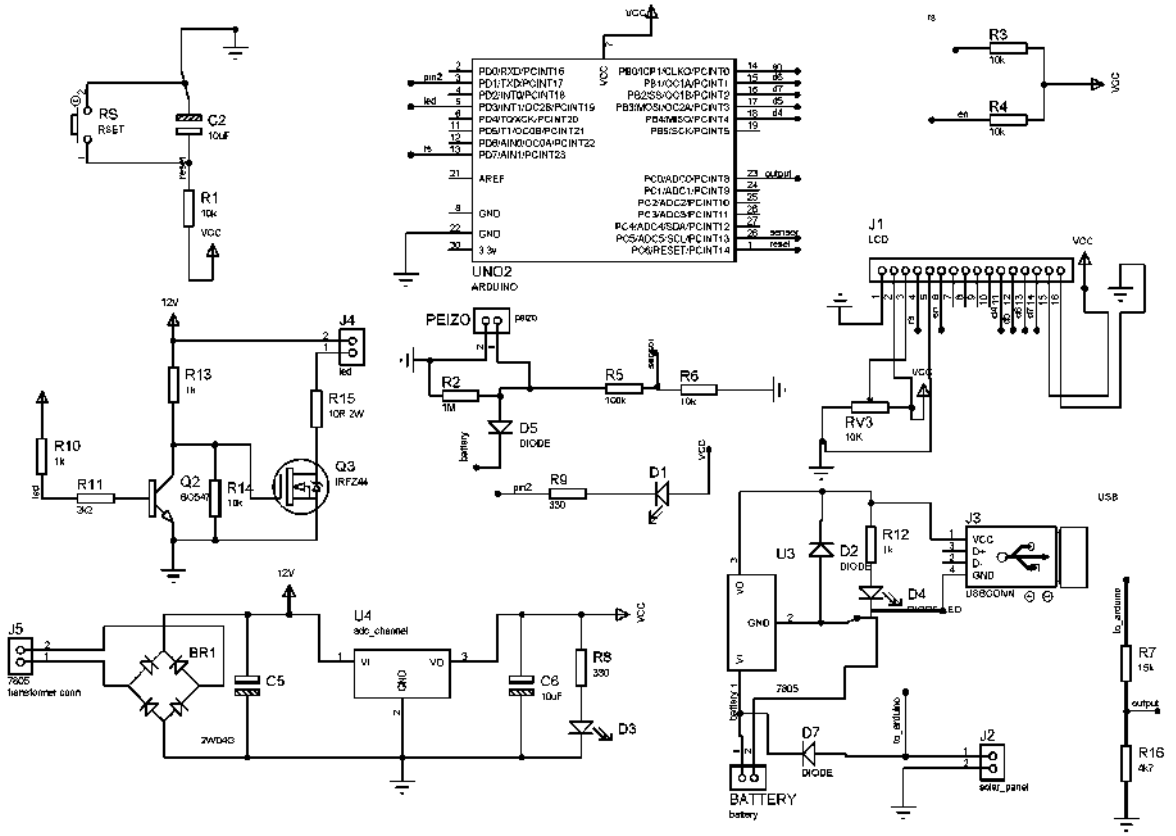

Fig 3.2 Connection diagram for various components used in the project

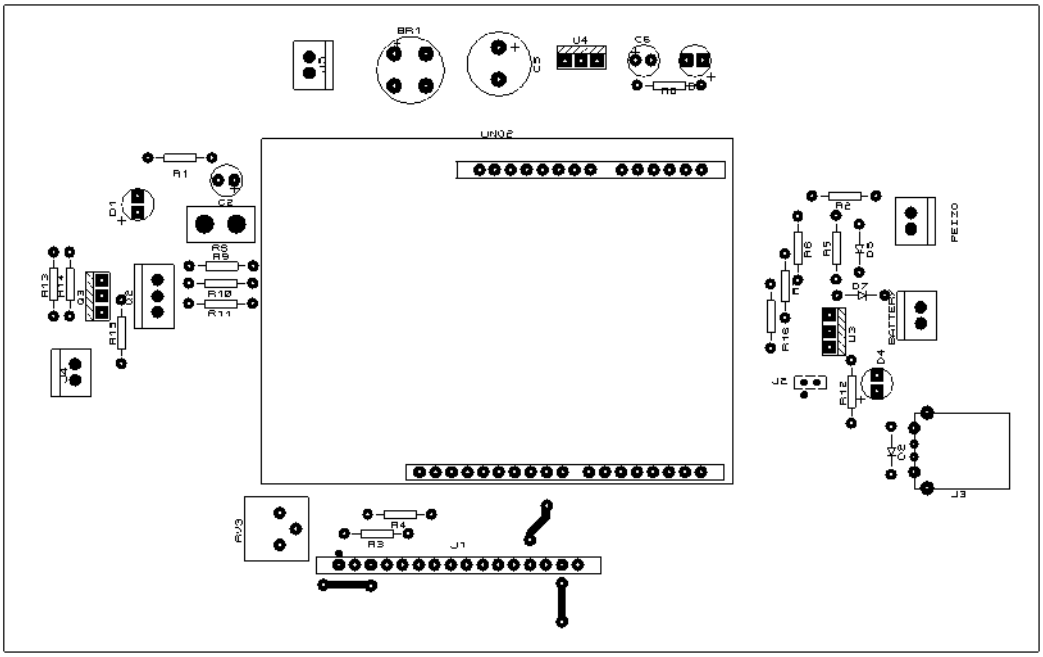

Fig 3.3 PCB layout used for the project

Working of the Hardware unit:

- The Footstep power generator works on the principle of piezoelectric effect.
- Piezoelectric Effect is the ability of certain materials to generate an electric charge in response to applied mechanical stress.
- Thus, squeeze certain crystals (such as quartz) and you can make electricity flow through them.
- In most crystals (such as metals), the unit cell (the basic repeating unit) is symmetrical; in piezoelectric crystals.
- Normally, piezoelectric crystals are electrically neutral: the atoms inside them may not be symmetrically arranged, but their electrical charges are perfectly balanced: a positive charge in one place cancels out a negative charge nearby.
- However, if you squeeze or stretch a piezoelectric crystal, you deform the structure, pushing some of the atoms closer together or further apart, upsetting the balance of positive and negative, and causing net electrical charges to appear.
- This effect carries through the whole structure so net positive and negative charges appear on opposite, outer faces of the crystal.
- Normally, the charges in a piezoelectric crystal are exactly balanced, even if they're not symmetrically arranged.
- If you squeeze the crystal, you force the charges out of balance.
- Now the effects of the charges (their dipole moments) no longer cancel one another out and net positive and negative charges appear on opposite crystal faces. By squeezing the crystal, you've produced a voltage across its opposite faces and that's piezoelectricity!
- In this project we have used the same phenomenon of producing piezoelectricity from piezoelectric crystal in the form of coin shaped disc.
- When one steps on the weighing machine the piezoelectric disc gets compressed. After the leg is lifted the crystal is decompressed.
- Thus a full vibration is sensed by the crystal disc and a voltage across it is produced.
- This voltage is sensed by the voltmeter and displayed on its display.
- Also, at the same time this voltage is used to charge the 12VDC Battery.
- LED’s have been mounted under the weighing machine that is switched on by relay through 555 timer IC whenever a voltage is generated.

- This event is notified by a glowing LED on the PCB. (Also one can hear the switching sound of the relay).
- Thus, whenever a person walks though the weighing machine the battery gets charged due to the voltage which is also displayed on the voltmeter. This event is notified by glowing LED's beneath the weighing machine.

Continuity Test:

In electronics, a continuity test is the checking of an electric circuit to see if current flows (that it is in fact a complete circuit). A continuity test is performed by placing a small voltage (wired in series with an LED or noise-producing component such as a piezoelectric speaker) across the chosen path. If electron flow is inhibited by broken conductors, damaged components, or excessive resistance, the circuit is "open".

Devices that can be used to perform continuity tests include multi meters which measure current and specialized continuity testers which are cheaper, more basic devices, generally with a simple light bulb that lights up when current flows.

An important application is the continuity test of a bundle of wires so as to find the two ends belonging to a particular one of these wires; there will be a negligible resistance between the "right" ends, and only between the "right" ends.

This test is the performed just after the hardware soldering and configuration has been completed. This test aims at finding any electrical open paths in the circuit after the soldering. Many a times, the electrical continuity in the circuit is lost due to improper soldering, wrong and rough handling of the PCB, improper usage of the soldering iron, component failures and presence of bugs in the circuit diagram. We use a multi meter to perform this test. We keep the multi meter in buzzer mode and connect the ground terminal of the multi meter to the ground. We connect both the terminals across the path that needs to be checked. If there is continuation then you will hear the beep sound.

Power On Test:

This test is performed to check whether the voltage at different terminals is according to the requirement or not. We take a multi meter and put it in voltage mode. Remember that this test is performed without microcontroller. Firstly, we check the output of the transformer, whether we get the required 12 v AC voltage.

Then we apply this voltage to the power supply circuit. Note that we do this test without microcontroller because if there is any excessive voltage, this may lead to damaging the controller. We check for the input to the voltage regulator i.e., are we getting an input of 12v

and an output of 5v. This 5v output is given to the microcontrollers' 40th pin. Hence we check for the voltage level at 40th pin. Similarly, we check for the other terminals for the required voltage. In this way we can assure that the voltage at all the terminals is as per the requirement.

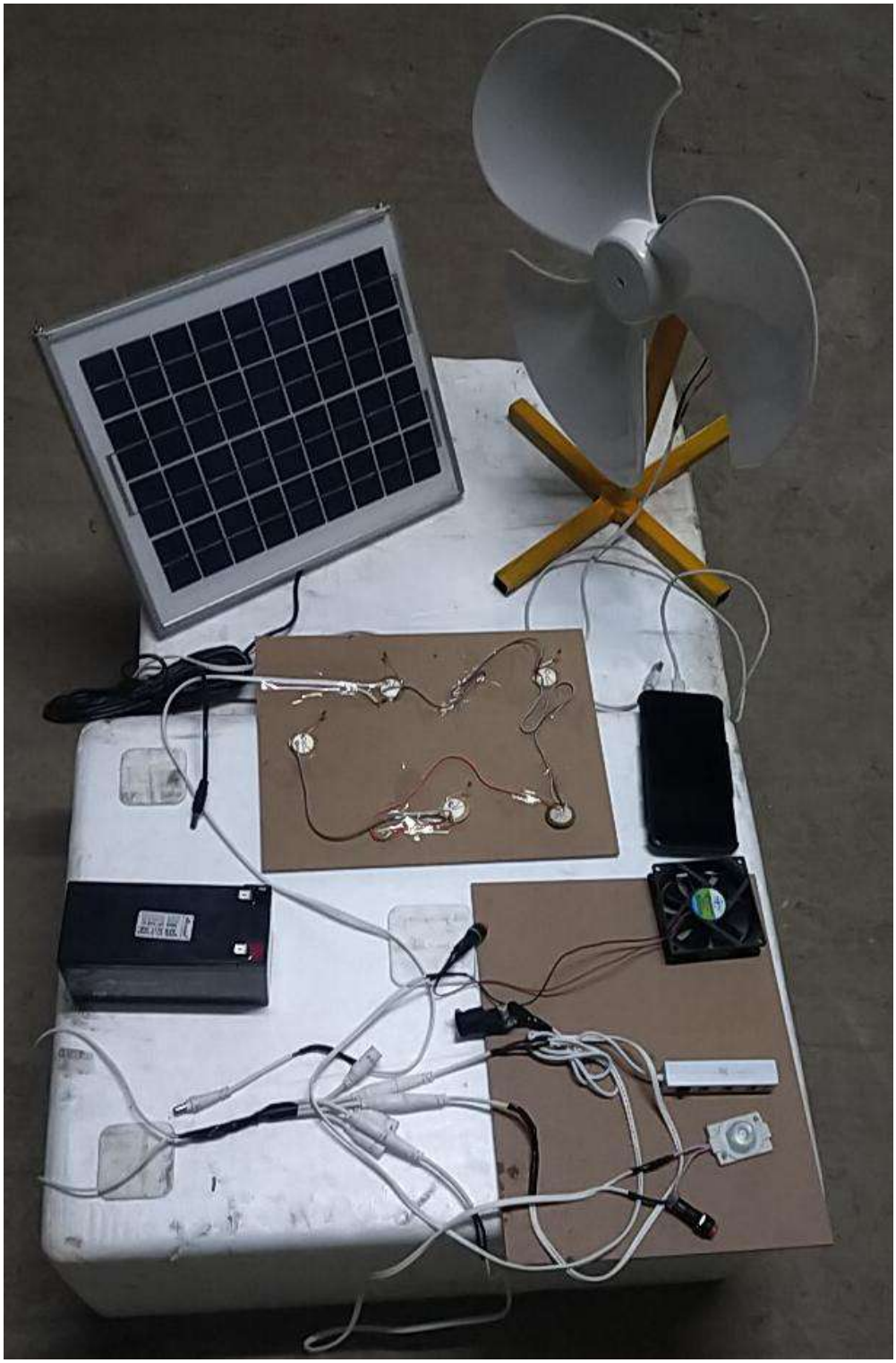

Fig 3.4 Hardware setup of the proposed system using solar, wind and piezo sources

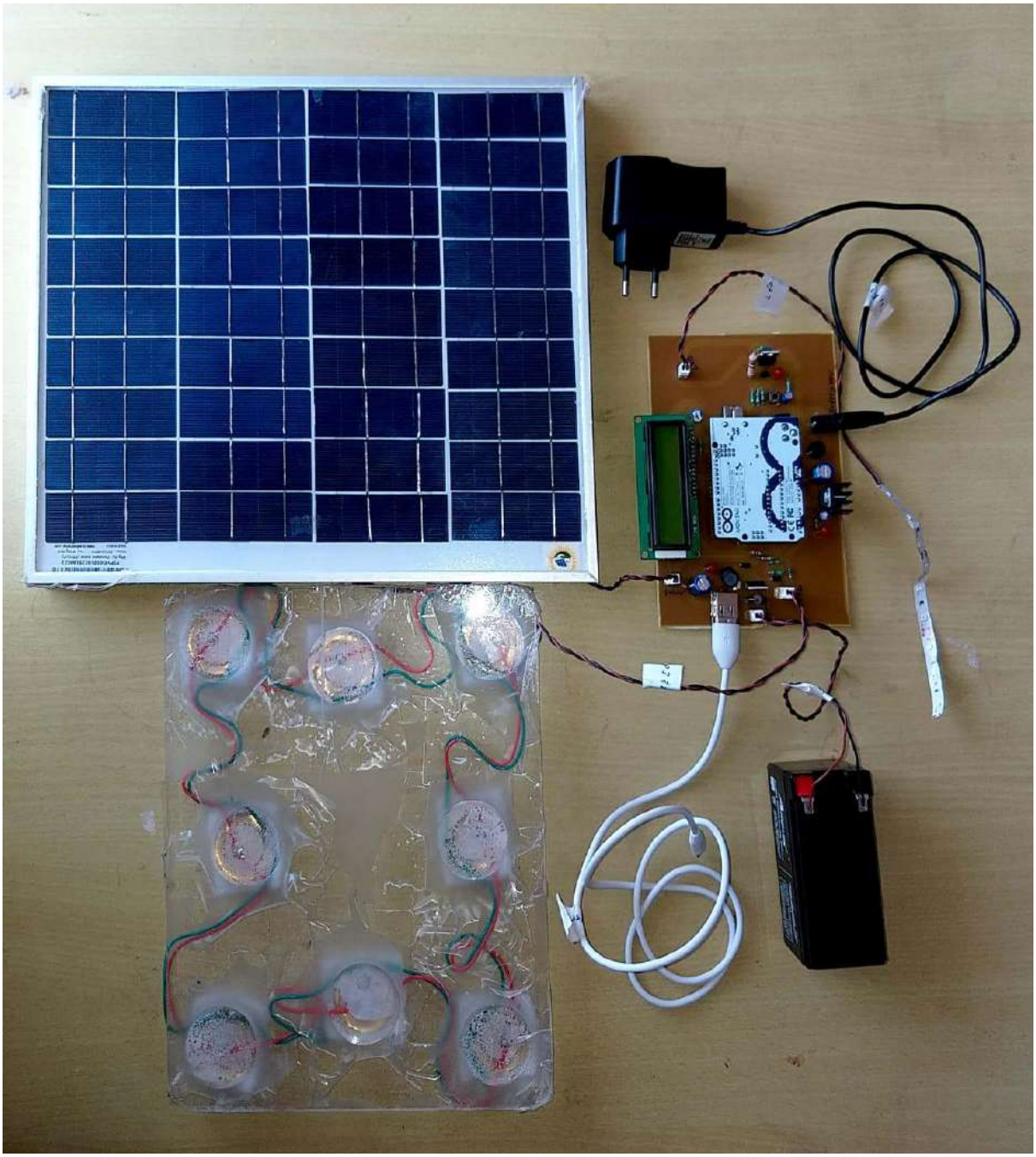

Fig 3.4 Hardware setup of the proposed battery charging system using solar and piezo sources

CHAPTER 4

SIMULATION RESULTS

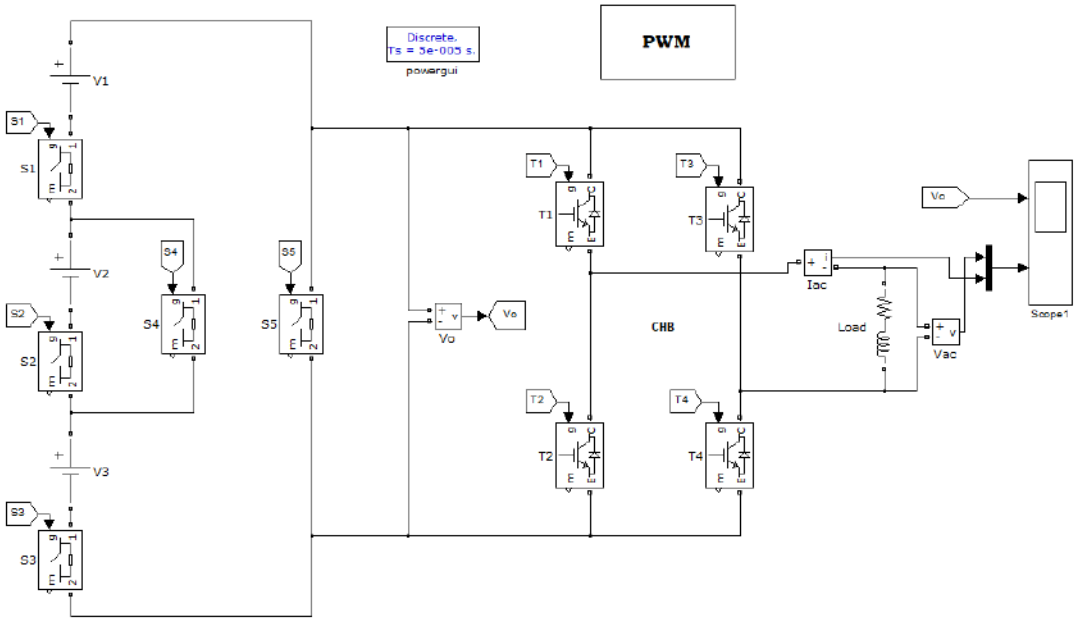

Fig. 4.1 Proposed basic unit

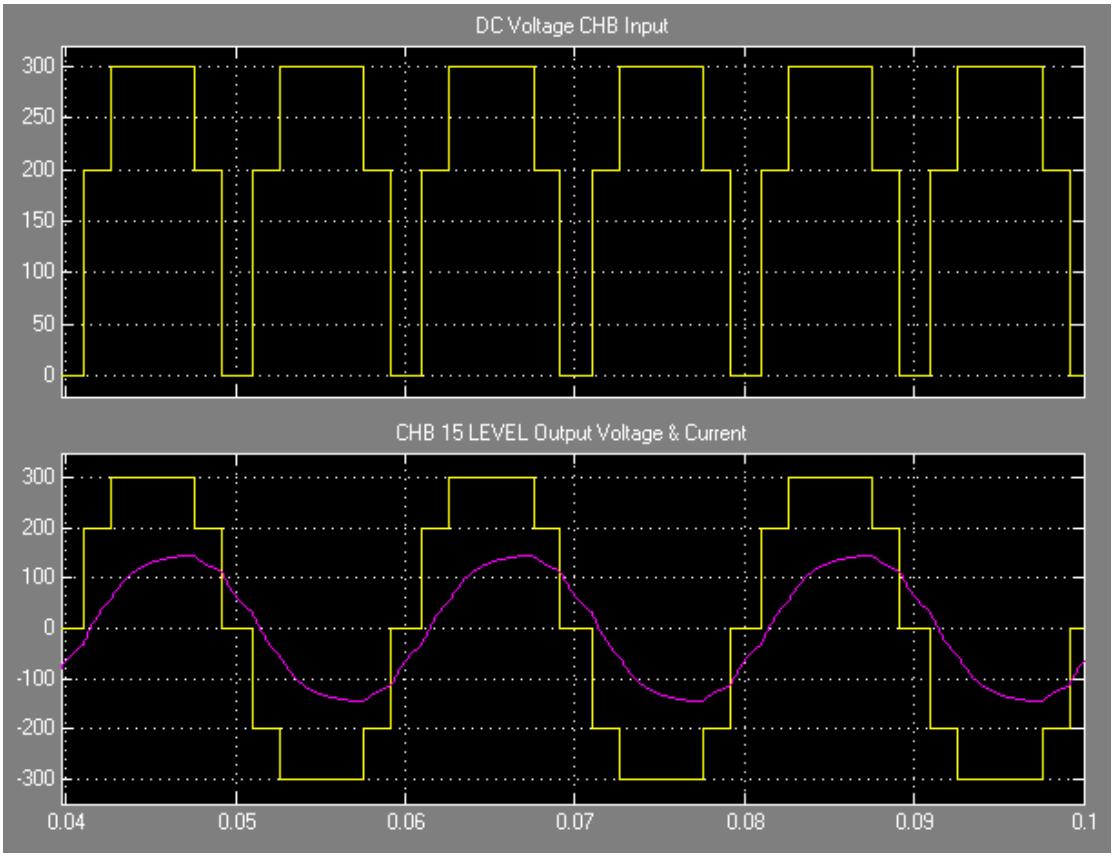

Fig. 4.2 Proposed basic unit output waveform

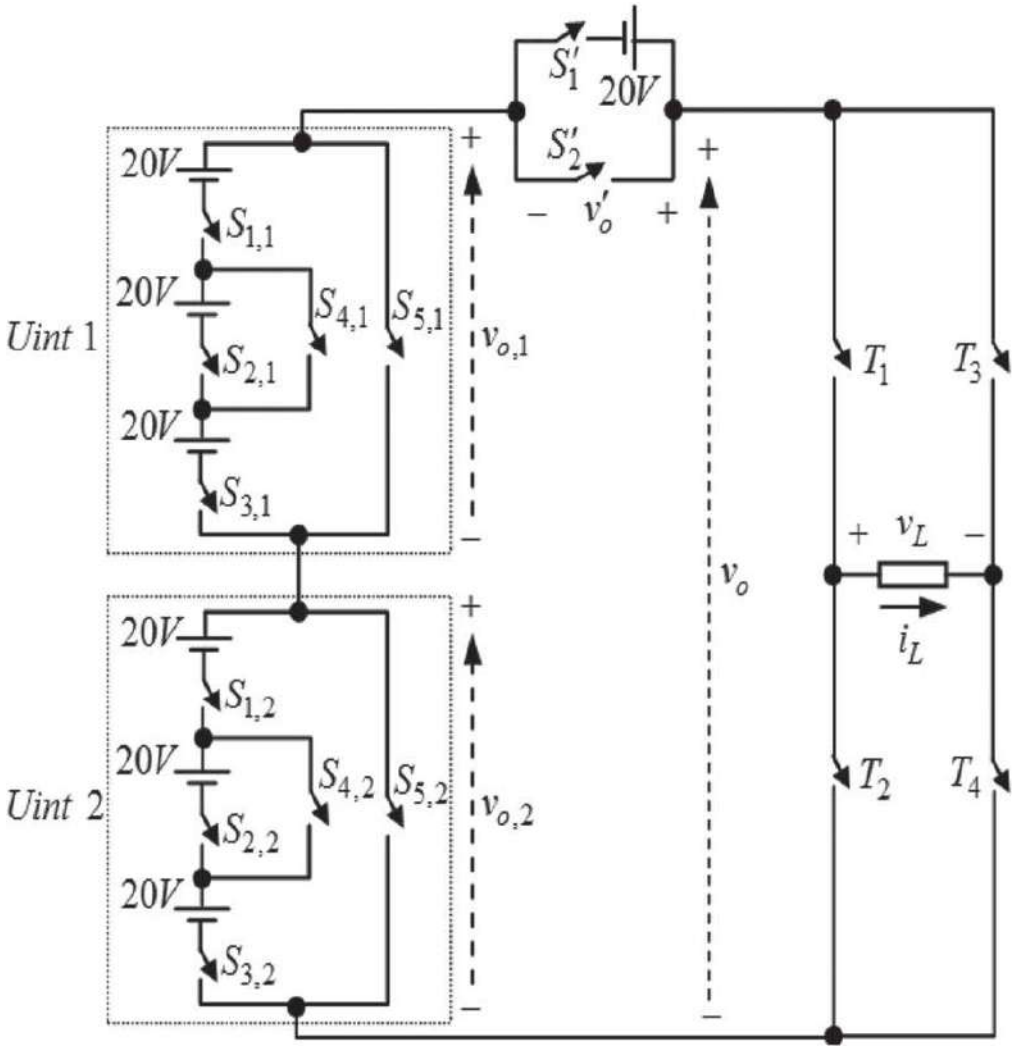

Fig. 4.3 Cascaded 15-level inverter based on the proposed basic unit.

In order to clarify the correct performance of the developed proposed inverter in generating the desired output voltage levels, the experimental results have been used. The number of required power electronic devices in the proposed inverter is completely based on the selected algorithm to determine the magnitude of the dc voltage sources. In this section, the investigations are done on a cascaded multilevel inverter that is shown in Fig. 8. This inverter consists of two proposed basic units and one additional series-connected dc voltage source that lead to the use of 7 dc voltage sources and 12 unidirectional power switches.

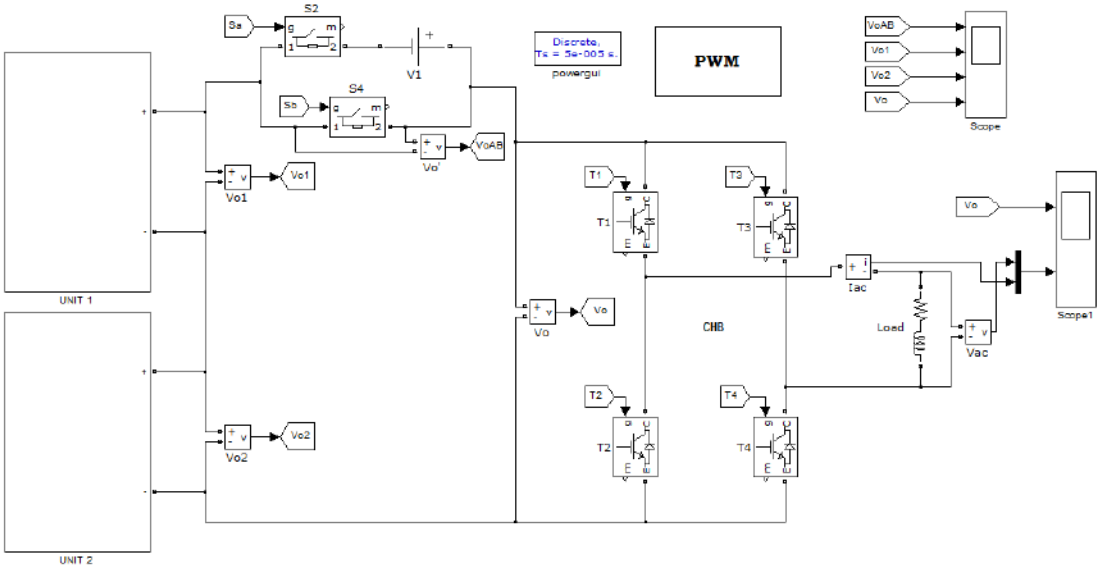

Fig. 4.4 Cascaded 15-level inverter based on the proposed basic unit

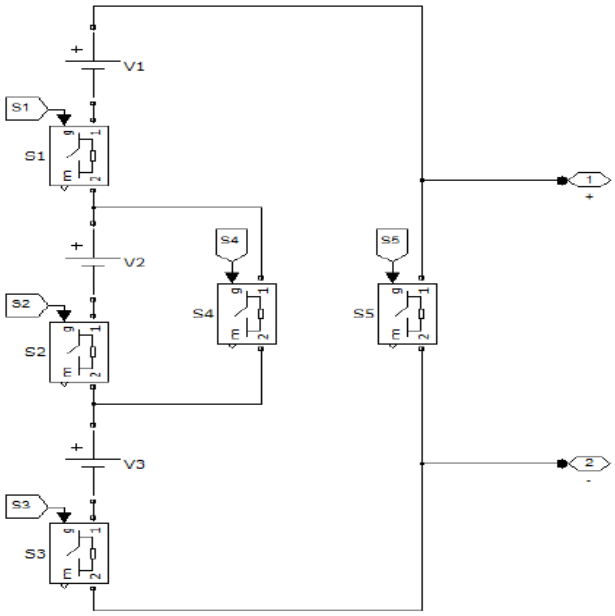

Fig. 4.5 Proposed basic unit.

The first proposed algorithm is considered to determine the magnitude of the dc voltage sources with V_{dc} = 20 V. According to (5), this inverter is able to generate 15 levels (seven positive levels, seven negative levels, and one zero level) with the maximum amplitude of 140 V at the output. It is important to note that the used IGBTs on the prototype are BUP306D (with an internal anti parallel diode). The 89C52 microcontroller by ATMEL Company has been used to generate all switching patterns. In all processes of the experimental performance, the load is assumed as a resistive–inductive ($R-L$) load, with R = 70 Ω, and L = 55 mH. It is important to point out that the used control method in this inverter

is the fundamental control method. The main reason to select this control method is its low switching frequency compared with other control methods that leads to reduction in switching losses.

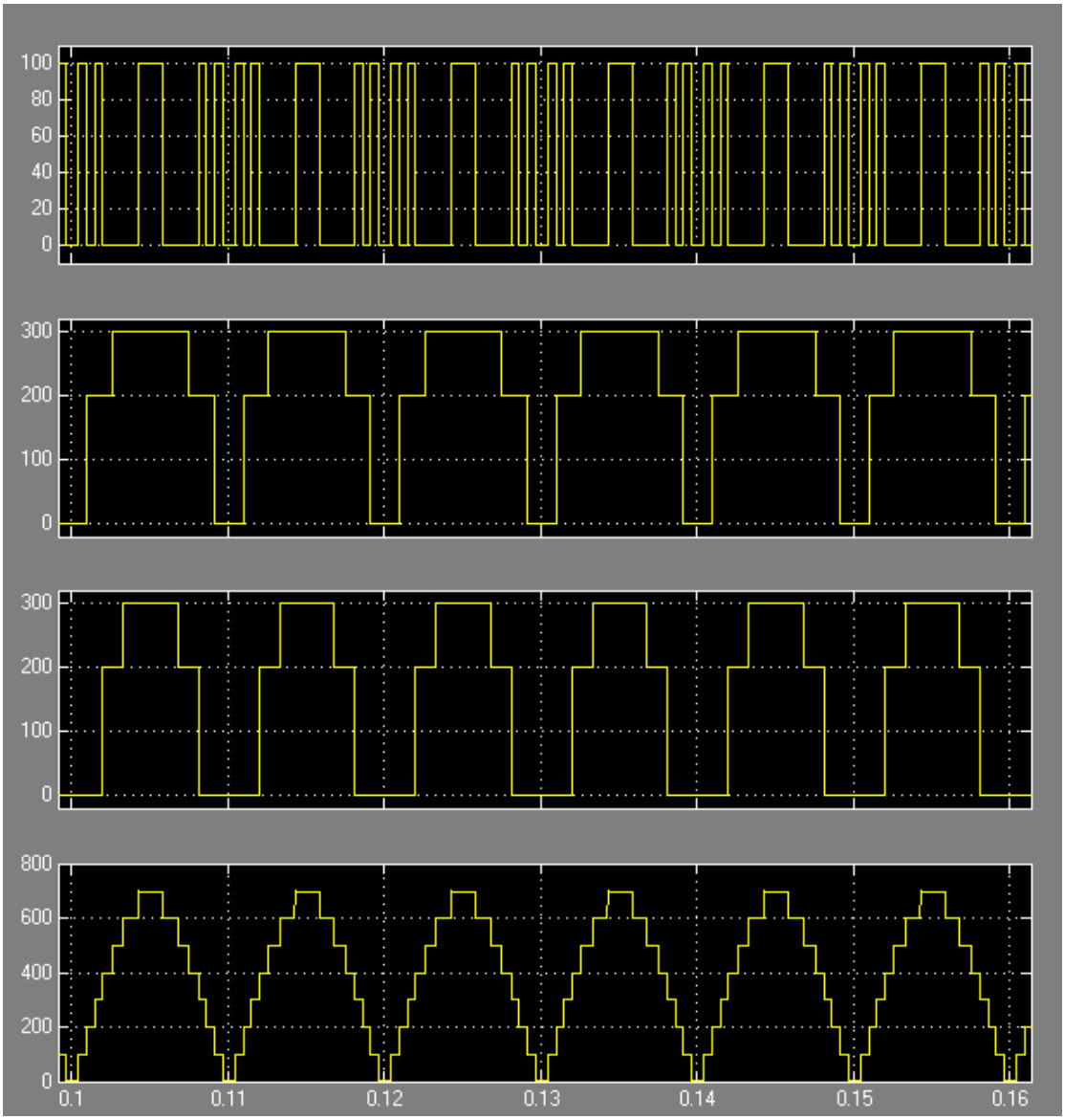

Fig. 4.6 Output voltage waveforms of each unit. (a) v_o. (b) $v_{o,\,1}$. (c) $v_{o,\,2}$. (d) v_o.

Fig. 4.6 shows the experimental results. As it is obvious in this figure, this inverter is only able to generate positive levels at the output. Fig. 4.6(a) shows that the added dc voltage source generates the minimum magnitude of the output levels that is equal to the lower value of the used dc voltage sources. Fig. 4.6(b) and (c) indicates that each unit generates the output voltage levels of 0, 40, and 60 V. By adding an H-bridge, this inverter is able to generate all positive and negative levels at the output.

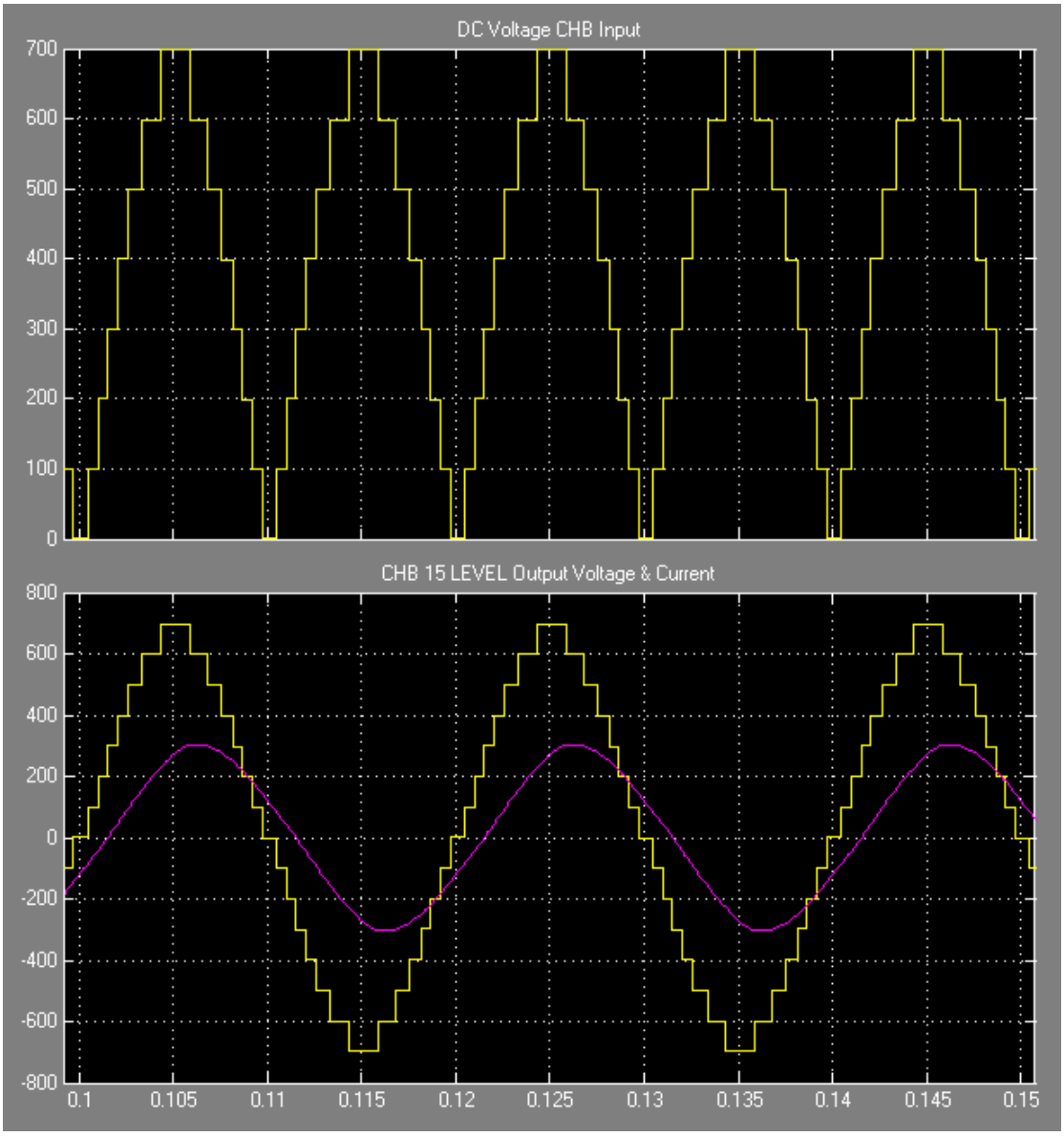

Fig. 4.7 Waveforms of the DC Voltage and load voltage and current.

Fig. 4.7 shows the waveforms of the load voltage and current. As shown in Fig. 4.7, this inverter generates a step waveform with 15 levels and maximum amplitude of 700 V. By comparing the current and voltage waveforms, it is clear that the current waveform is near the ideal sinusoidal waveform and consists of a phase shift in comparison with the load voltage. These differences are due to the resistive–inductive load feature that acts as a low-pass filter.

CONCLUSION

This project "DESIGN AND MODELING OF MICROGRID WITH INTEGRATION OF MULTIPLE RENEWABLE ENERGY SOURCES" is successfully tested and implemented which is the best economical, affordable energy solution to common people. This can be used for many applications in rural areas where power availability is less or totally absence. As India is a developing country where energy management is a big challenge for huge population. By using this project we can drive both A.C. as well as D.C loads according to the force we applied on the piezo electric sensor. Our prototype demonstrates that a floor generator can be done. A DC generator can illustrate the concept, but the reliability and durability are questionable, Newer technologies could make a very reliable generator. Proposal for the utilization of waste energy of foot power with human locomotion is very much relevant and important for highly populated countries like India and China. The whole human/ bio-energy being wasted if can be made possible for utilization, it will be great invention and crowd energy farms will be very useful energy sources in crowded countries.

REFERENCES

[1] Scott Meninger, Jose Oscar Mor-Miranda, Rajeevan Amirtharagah,anantha p. Chandrakasan, and Jeffrey H.Lang, Fellow, "Vibration-to-electric energy conversion," IEEE Transactions on Very Large Scale Integration (VLSI) Systems (Volume: 9, Issue: 1, Feb. 2001)

[2] N. A. Ahmed, M. Miyatake, and A. K. Al-Othman, "Power fluctuations suppression of stand-alone hybrid generation combining solar photovoltaic and fuel cell systems," in Proc. Of Energy Conversion and Management, Vol. 49, pp. 2711-2719, October 2008.

[3] T.Vignesh, G.Boopathiraj, "Load Fluctuation Suppression Based on Hybrid Generation Combining Solar Photovoltaic /Wind Turbine and Fuel Cell Systems," International Conference on Emerging Engineering Trends and Science (ICEETS –2016) ISSN:2348 -8379

[4] M.J. Shawon, L. A. Lamont, L. El Chaa , "Modeling and Power Management of a Remote Stand Alone PV-Wind Hybrid System," International Journal of Recent Development in Engineering and Technology Website: www.ijrdet.com (ISSN 2347 -6435 (Online)Volume 2, Issue 4, April 2014.

[5] The 8051 Microcontroller and Embedded Systems Using Assembly and C By Muhammad Ali Mazidi, Sarmad Naimi

[6] AVR Microcontroller And Embedded Systems: Using Assembly And C By Muhammad Ali Mazidi, Sarmad Naimi

[7] HUGHES electrical and electronics technology. (BY PEARSON)

[8] Sanyo Ltd, "Amorphous Silicon Solar Cells Amorphous Photosensors," Feb. 2011.

[9] J. David, "Nickel-cadmium battery recycling evolution in Europe," Journal of Power Sources, vol. 57, no. 1, pp. 71–73, 1995.

[10] J. H. Pedersen, "Power Converter for Energy Harvesting," Technical University of Denmark, pp. 1–36, Mar. 2011.

[11] S. Senli, "Ethernet Energy Harvesting," Master's thesis, KTH School of ICT, 2012.

[12] D. Bouchouicha, F. Dupont, M. Latrach, and L. Ventura, “Ambient RF energy harvesting,” International Conference on Renewable Energies and Power quality, Granada, Spain, 2010.

[13] J. Hagerty, T. Zhao, R. Zane, and Z. Popovic, “Efficient broadband rf energy harvesting for wireless sensors,” Department of Electrical and Computer Engineering, University o Colorado at Boulder, Boulder, CO, pp. 80309–80425, 2005.

[14] T. Starner and Massachusetts Institute of Technology. Perceptual Computing Section, “Human powered wearable computing,” 1995.

[15] L. Bao and X. Li, “Towards Textile Energy Storage from Cotton T-Shirts,” Advanced Materials, vol. 24, pp. 3246–3252, May 2012.

[20] S. Roundy, “Energy scavenging for wireless sensor nodes with a focus on vibration to electricity conversion,” 2003.

[21] M. Gr¨atzel, “Conversion of sunlight to electric power by nanocrystalline dye-sensitized sola cells,” Journal of Photochemistry and Photobiology A: Chemistry, vol. 164, pp. 3–14, June 2004.

[22] Solarprint, “DSSC Module Leaflet 1 page,” solarprint.ie, pp. 1–1, Dec. 2011.

[23] M. Gr¨atzel, “Solar cells to dye for,” nature, vol. 421, no. 6923, pp. 586–587, 2003.

[24] L. Casta˜ner and S. Silvestre, Modelling photovoltaic systems using PSpice. Wiley, 2002.

[25] R. Twohig, “Comparison of Indoor PV modules,” solarprint.ie, pp. 1–6, Oct. 2011.

[26] A. Dolara, R. Faranda, and S. Leva, “Energy comparison of seven MPPT techniques for PV systems,” J. Electromagn. Anal. Appl, vol. 3, pp. 152–162, 2009.

APPENDIX

SOURCE CODE FOR ARDUINO

```
#include <LiquidCrystal.h>
LiquidCrystal lcd(7,8, 12,11,9,10);
const int led=3;
long x=0,y=0;
const int led1=2;
const int solar=A0;
const int sensor=A5;
float input_voltage = 0.0;
float solar_voltage = 0.0;
float last_input=0.0;
float temp=0.0;
float temp1=0.0;
float r1=100000.0;
float r2=10000.0;
float r3=15000.0;
float r4=4700.0;
int a=0;
void setup()
{
  Serial.begin(9600); //  opens serial port, sets data rate to 9600 bps
  pinMode(led,OUTPUT);
  pinMode(led1,OUTPUT);
  lcd.begin(16, 2);      // set up the LCD's number of columns and rows:
  lcd.print("FootStep + Solar");
  lcd.setCursor(0,1);
  lcd.print("Power Generator ");
  delay(2000);
  lcd.clear();
  lcd.print("Volt:|Cnt:|Sol: ");
  lcd.setCursor(0,1);
  lcd.print(input_voltage);
  lcd.setCursor(4,1);
  lcd.print("V|");
  lcd.print(a);
  lcd.setCursor(10,1);
  lcd.print("|");
  lcd.print(solar_voltage);
  lcd.setCursor(15,1);
  lcd.print("V");
}
void loop()
{

  int analog_val1 = analogRead(solar);
  temp1 = (analog_val1 * 5.0) / 1024.0;
  solar_voltage = temp1 / (r4/(r3+r4));
```

```
  lcd.setCursor(10,1);
  lcd.print("|");
  lcd.print(solar_voltage);
  lcd.setCursor(15,1);
  lcd.print("V");
  int analog_value = analogRead(sensor );
  temp = (analog_value * 5.0) / 1024.0;
  input_voltage = temp / (r2/(r1+r2));
  if (input_voltage < 0.1)
  {
   input_voltage=0.0;
  }
  if((last_input<input_voltage )&& (input_voltage >5))
  {
   lcd.clear();
   y=millis();
   digitalWrite(led1,HIGH);
   digitalWrite(led,LOW);
  if(last_input==0)
   { a=a+1;}
   last_input=input_voltage;
   Serial.print("v= ");
   Serial.println(input_voltage);
  lcd.print("Volt:|Cnt:|Sol: ");
  lcd.setCursor(0,1);
  lcd.print(input_voltage);
  lcd.setCursor(4,1);
  lcd.print("V|");
  lcd.print(a);
  lcd.setCursor(10,1);
  lcd.print("|");
  lcd.print(solar_voltage);
  lcd.setCursor(15,1);
  lcd.print("V");
  }
     if(millis()>y+1000)
     {
      last_input=0;
      digitalWrite(led,HIGH);
      digitalWrite(led1,LOW);
      }
}
```

1.3.2. Name and Average percentage of courses that include experiential learning through project work/field work/internship during last five years

Sample Project MECH Academic Year 2019-2020

Name of the Project: MODIFICATION OF DOMESTIC AIR COOLER WITH COPPER TUBE ATTACHMEN

S. No	Course No	Course Name	Page Mapping
1	1	Fluid Mechanics & Hydraulic Machinery	8
2	2	Design of Machine Members – II	8
3	3	Dynamics of Machines	8
4	4	Kinematics of Machinery	8
5	5	Thermal Engineering – II	8,13.
6	6	Refrigeration & Air-Conditioning	8,9,10,11,12,15,16,19-24,28
7	7	Metallurgy & Material Science	8,11,26
8	8	Thermodynamics	8,12,15,26,28
9	9	Thermal Engineering – I	8,12
10	10	Heat Transfer	8,13,17,18,30
11	11	Power Plant Engineering	8,17,18
12	12	Instrumentation & Control Systems	8
13	13	Automobile Engineering	8
14	14	CAD/CAM	8
15	15	Metal Cutting & Machine Tools	8
16	16	Operational Research	8,13
17	17	Design of Machine Members – I	8
18	18	Automation in Manufacturing	8,15
19	19	Advance Materials	27

1 Total Number of Domain subjects : 30

2 Number of Subjects that include experiential learning through project work : 19

3 Average: 64%

HOD-mech

Principal

A project Report on

MODIFICATION OF DOMESTIC AIR COOLER WITH COPPER TUBE ATTACHMENT

Thesis submitted in Fulfilment of the Requirement for the A ward of the Degree of
Bachelor of technology in Mechanical Engineering

By

M KIRAN	**17ME5A0330**
T CHANIKYA SAI	**17ME5A0343**
T SATISH CHANDRA	**17ME5A0340**
D VENU GOPAL	**16ME1A0384**
V TEJA KUMAR	**17ME5A0345**

Under the esteemed guidance of

MrG.CHITTI BABU, M.Tech

Asst.Professor

Department of Mechanical Engineering

RAMACHANDRA COLLEGE OF ENGINEERING

(Approved by AICTE, New Delhi & Affiliated to JNTU Kakinada) NH 5

Bypass Road, Vatluru (V), ELURU-534007, W.G District, A.P [2016-2020]

RAMACHANDRA COLLEGE OF ENGINEERING

(Approved by AICTE, New Delhi & Affiliated to JNTU Kakinada) NH 5 Bypass

Road, Vatluru (V), ELURU-534007, W.G District, A.P

DEPARTMENT OF MECHANICAL ENGINEERING

BONAFIDE CERTIFICATE

This is to certify that the project entitled, MODIFICATION OF DOMESTIC AIR COOLER WITH COPPER TUBE ATTACHMENT that is being submitted by BATCH NO-03 for the award of the degree of B.Tech. in Mechanical Engineering of Ramachandra College of Engineering, Eluru is a record of bonafide work carried out by him under our guidance and supervision during the academic year 2016 - 2020 and it has been found worthy of acceptance according to requirement of the University.

Project Guide

Mr. G. CHITTI BABU M. Tech

Asst. professor

Head of the Department

Dr J S SURESH ME,PHD

Professor &HOD

Internal Examiner

External Examiner

ACKNOWLEDGEMENT

Many people have helped me to bring out this thesis in this present form. We are grateful to them.

We are indebted to Sri. K.VENUGOPAL , secretary, RCE for providing with good academic and research environment in the college.

We thankful to the Principal Dr. DOLA SANJAY.S, M. Tech, Ph. D. and my HOD Dr J S SURESH ME,PHD Head of the Dept of Mechanical Engineering for their invaluable encouragement, support and suggestions given for this project work.

We express my deep sense of heart full thanks to Mr. G CHITTI BABU M. Tech. ASST.PROFESSOR, Department ME for his valuable guidance.

We thank to the faculty of Mechanical Engineering Department, for their co-operation in completing this project.

We dedicate this to our mother nature to guide for the welfare of all.

ABSTRACT

The main concept of the project is to increase the efficiency of the ordinary table fan by using simple mechanism. The ordinary table fan gives very small amount of cold air in the room. So to modify this by attaching various arrangements to increase the cooling by using table fan. The components such as table fan, aquarium pump, copper tube, vinyl tube, ice cooler box. By those components we can increase the efficiency of table fan by increasing the cooling effect.

DECLARATION

I hear by declare that the dissertation submitted by us to the department of MECHANICAL ENGINEERING of the RAMACHANDRA COLLEGE OF ENGINEERING Affiliated to JNTUK in partial fulfillment of the requirement for the award of degree of B.TECH under the supervision of Mr. G CHITTI BABU$_{M.Tech}$ has not been submitted in any other university of institution for the fulfillment of the requirement of the course of the study or published at any time before.

Project associated

M KIRAN	**(17ME5A0330)**
T CHANIKYA SAI	**(17ME5A0343)**
T SATISH CHANDRA	**(17ME5A0340)**
D VENU GOPAL	**(16ME1A0384)**
V TEJA KUMAR	**(17ME5A0345)**

INDEX

S. NO. CHAPTER PAGE.NO

1.INTRODUCTION……..8

(a) AIM & OBJECTIVE

(b) PROBLEM IDENTIFICATION

(c) BACK GROUND AND MOTIVATION

(d) METHODOLOGY

2. LITERATURE SURVEY……..10

3. REFRIGIRATION……13

4. METHODOF HEAT TRANSFER……17

(a) CONDUCTION

(b) CONVECTION

(c) RADIATION

5. METHODS OF REFRIGIRATION……...19

6. COMPONENTS & DISCRIPTION……...25

7. MODELCALUCLATIONS & READINGS……30

8. TABULAR COLOUMN & GRAPHS……...36

9. ADVANTAGES& DISADVANTAGES……..38

10. FABRICATION MODEL……..39

11. CONCLUSION……..40

12. REFERENCES……...41

LIST OF FIGURES

FIG 3.1

13.

REFRIGIRATION CYCLE…….13

FIG 5.1

ICE REFRIGIRATION…….20

FIG 5.2

DRY ICE REFRIGIRATION…….21

FIG 5.3

STEAM JET REFRIGIRATION……23

FIG 6.1

TABLE FAN……..25

FIG 6.2

COPPER TUBES……...26

FIG 6.3

VINYL TUBE……27

FIG 6.4

PUMP…….28

FIG 6.5

ICE COOLER……...29

FIG 10.1

FABRICATION MODEL……39

1.INTRODUCTION

In our running world everyone trying to discover new things and new inventions. Whereas some of them trying to modify the existing inventions. This modification makes an huge impact on existing one's. in the form of cost and efficiency. Energy is important source in the world, without energy we are nothing. It runs the whole mankind. In practice, energy consumption is high in rural areas by using different electrifications. Whereas the urban areas has more power shortage. In summer season it is more. So high electrifications such as coolers, air conditioners are reduced in those areas. So to rectify the problem for the poor in summer season, in this project we modify the existing fan into an air cooler by the copper tube attachment.

1 2,3,4,5 6 7

AIM :

To reduce the room temperature and to increasing the efficiency of table fan . With minimum investment. 5,8,9,10,11,12,13

OBJECTIVE

By using simple mechanism, we will archive a temperature drop of 5 degree to 8 degree centigrade. 14,15 5,8,9,10,11,12,13

With minimum capital cost we will archive a optimum design. 17,18 16

The usage of resources and materials from the surroundings in an effective manner.

In our world now a days air cooler's and air conditioners are most commonly used electrical devices. They are part of our daily life as they used in different places such as shopping malls, home, offices, college etc. In summer season those devices give more comfort to the human. For poor people they are unable buy air conditioners as they consume more electricity. To rectify those problems we modifying the existing ordinary table fan into air cooler. 6

1.(c) BACKGROUND AND MOTIVATION FOR THE WORK :

Now a days energy plays an important role in man, material, and machines. The energy plays an vital role in the world. This makes increasing of living standards which is related to energy consumption as the human is affording for his own comfort. In summer season the domestic table fan gives very small amount of cooling effect. To rectify those problem we modify the table fan with copper tube attachment. This increase the cooling effect produces by the fan, with minimum capital cost. This helps for poor people and also for urban people who has more power shortage.

16

1.(d)METHODOLOGY:

In this project, we modify the domestic table fan by using copper tube attachment. We use an ice box which is used to store the ice cubes and water for pumping through motor. This makes circulating of water through the copper tube and the water is circulated through long period of time, thus the fan rotates as the air from the fan passes through the copper tubes arrangement gives more chilled air as compared to normal fan.

2.LITERATURE SURVEY

LITERATURE SURVEY:

Design AND Fabrication OF Homemade Air Conditioner

6

Naikodimallappa, Mane Amit, Manave Ashish, PangaleSuhas, Shinde Vilas, Prof. Dongare Vaibhav Department Of Mechanical Engineering, RMCET (Mumbai University) Ambav, Devrukh, India.

In our running world everyone trying to discover new things and new inventions. Where as some of them trying to modify the existing inventions. This modification makes an huge impact on existing one's. in the form of cost and efficiency. Energy is important source in the world, without energy we are nothing.i0t runs the whole mankind. In practice, energy consumption is high in rural areas by using different electrifications. Where as the urban areas has more power shortage. In summer season it is more. So high electrifications such as coolers, air conditioners are reduced in those areas. So to rectify the problem for the poor in summer season, in this project we modify the existing fan into an air cooler by the copper tube attachment.The main components are : copper tube, evaporative cooler, pump, domestic fan.

6

The detail descriptions of the parts to be used in development of air conditioning system and development steps are discussed in this section of the report. The developed setup has following major parts. 1) Table Fan 2) Copper Tube 3) Submersible Water Pump 4) PVC flexible tube 5) Insulated Box for Cold Water A. Table Fan Electric Table Fan is one of the common electric appliances used in houses, offices, shops and business establishments to provide air circulation and to cool down temperature. Fan circulates the air, which enhances the evaporation rate of sweat from body, due to which body is cooled. Table Fans are manufactured 200 mm, 300 mm and 400 mm sweep sizes, but the one, which is most commonly used, is of 400 mm sweep size. Table Fan has become necessity in summer season in houses, schools, colleges, factories, hospitals and business establishments. Further Table Fan is extensively used in rural areas especially when: 1) There is no ceiling overhead. 2) Portability of this fan is better in comparison to ceiling pedestal and exhaust fans. Minimum 50% of table fans used in this area are from standard brands such as Usha, Orient, Crompton, GEC, rest 50% are from SSI

Units located in different parts of state. discussed in this section of the report. The developed setup has following major parts. 1) Table Fan 2) Copper Tube 3) Submersible Water Pump 4) PVC flexible tube 5) Insulated Box for Cold Water A. Table Fan Electric Table Fan is one of the common electric appliances used in houses, offices, shops and business establishments to provide air circulation and to cool down temperature. Fan circulates the air, which enhances the evaporation rate of sweat from body, due to which body is cooled. Table Fans are manufactured 200 mm, 300 mm and 400 mm sweep sizes, but the one, which is most commonly used, is of 400 mm sweep size. Table Fan has become necessity in summer season in houses, schools, colleges, factories, hospitals and business establishments. Further Table Fan is extensively used in rural areas especially when: 1) There is no ceiling overhead. 2) Portability of this fan is better in comparison to ceiling pedestal and exhaust fans. Minimum 50% of table fans used in this area are from standard brands such as Usha, Orient, Crompton, GEC, rest 50% are from SSI Units located in different parts of state.

B. Copper Tube Copper tubing used for air conditioning and refrigeration work is called ACR (Air Conditioning and Refrigeration) tubing. It differs from copper tubing used for general plumbing work. When ACR tubing is manufactured, the inside of the tubing is dehydrated to remove all moisture. The tubing is then charged (filled) with low-pressure nitrogen gas and sealed with a cap at each end to keep the tubing safe from contamination by oxygen and moisture in the air. If oxygen atoms were to combine with copper atoms (a process called oxidation), a layer of copper oxide would form inside the tubing. The caps also keep out dirt and other foreign matter that could contaminate a refrigeration system. Caps or plugs should be replaced after cutting a length of tubing. Plumbing copper tubing is cheaper than ACR copper tubing, but plumbing copper is not used in refrigeration systems because it is not protected against contamination. Plumbing copper also differs from ACR copper in size. Plumbing copper is measured by its nominal inside diameter (ID), while ACR copper is measured by its outside diameter (OD)

1) Features of Tube Seamless Copper tube. Available in sizes 4.76mm up to and including 104.78mm, in various wall thicknesses. The internal cleanliness of air conditioning, refrigeration and medical gas tube is critical in order to prevent contamination to the components in the piping system. Tube wall thickness will determine which refrigerant is suitable, depending upon temperature range. The full range of straight lengths and annealed coils are listed overleaf. Half Hard tube can be bent using bending tools without applying additional heat. 2) Hand Bending Soft copper greater than 1/43 in diameter can sometimes be bent successfully by hand. (Smaller tubing is easily bent by hand without kinks or flats,

unless the bend is very sharp.) Bending is done carefully, a little at a time, to avoid developing severe flats or kinks that must be removed. Hand bending requires skill and should be done only by experienced technicians.

3) Spring Benders Provide an efficient, low-cost method to bend soft copper tubing. Spring benders are available in a variety of sizes to fit tubing from 1/43 OD to 3/43 OD. These springs slip over the tubing to completely cover the area of the bend. After each bend is made, the spring is slid along the tubing to the next section to be bent. When a bend is sharp, spring benders have a tendency to bind, or stick, to the tubing. This tendency to bind can be overcome by bending the tubing a little farther than needed, then bending it back to relieve pressure on the spring. Push; do not pull, on the spring to remove it from the tubing. Pulling can permanently separate the spring coils, making the bender unfit for further use. If the bend is still too tight to slide the spring off the tubing, simply twist the spring to "unscrew" it. Very little practice is needed to accomplish proper Bends in smaller tubing with a spring bender. Larger tubing, however, requires more physical force to bend so spring benders are used on larger tubing primarily to accomplish slight bends or curves. Although the spring bender is designed for use on the outside of tubing, a smaller spring is sometimes inserted into the tubing to make a bend at the tubing end.

C. Submersible Water Pump Submersible Water Pump Cooler Pump Motor is important equipment in the system by which the cold water is supplied in the copper tube. Special Features of the pump motor are as follows:

1) Copper Winding

2) Compact Size

3) Easy to Install

4) Rust Proof

5) Multiple Usage

6) Easy to Clean submersible pump

7) Low Electricity Consumption

4) Specifications

1) 220-240V 2) AC Ph-1 50Hz 3) 14W 4) Max Lifting Height: 1.85Meters(6 Feet)

3.REFRIGIRATION

It is the process of producing and maintains the temperature of body below of its surroundings 5,6,8,9,10,11,12,13

Literal meaning of refrigeration is the production of cold confinement relative to its surroundings. In this, temperature of the space under consideration is maintained at a temperature lower than the surrounding atmosphere. 8

To achieve this, the mechanical device extracts heat from the space that has to be maintained at a lower temperature and rejects it to the surrounding atmosphere that is at a relatively higher temperature. 16

Since the volume of the space which has to be maintained at a lower temperature is always much lower_ than the environment, the space under consideration experiences relatively higher change in temperature than the environment where it is rejected. Refrigeration has many applications, including, but not limited to: household refrigerators, industrial freezers, cryogenics, and air conditioning. Heatpumps may use the heat output of the refrigeration process, and also may be designed to be reversible, but are otherwise similar to refrigeration units.

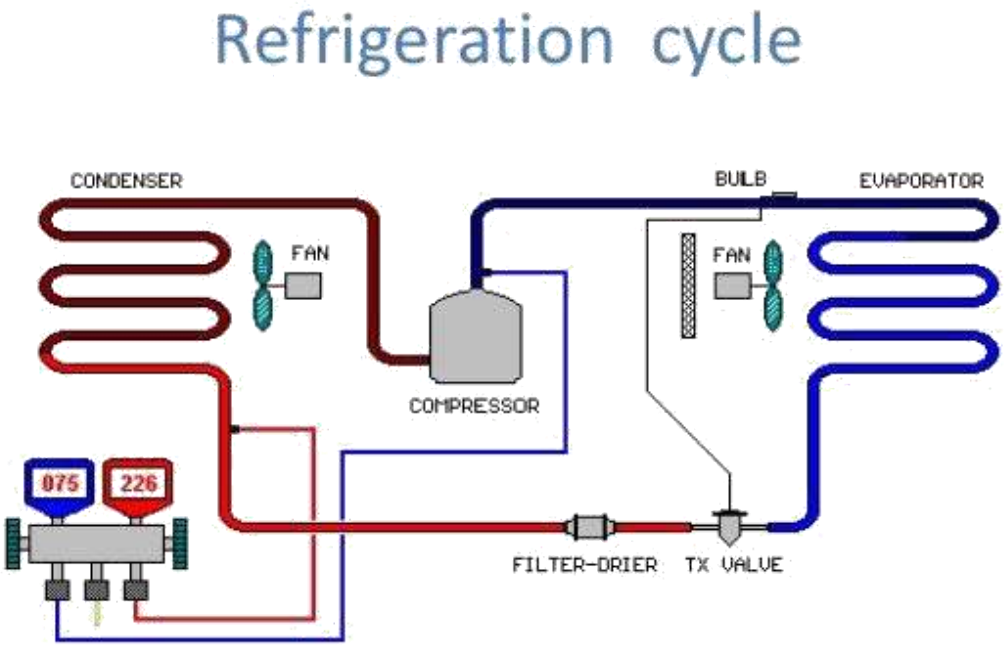

fig 3.1

Necessity of refrigeration:

During the summer season we need cold air for cooling the room, cold water for drinking, etc... We also need to produce ice during summer as well as winter season for various purposes. Food articles such as vegetables and food grains produced in abundant at a particular time but used throughout the year for a longer period are to be stored in the cold.

Human blood is preserved in the blood bank at -5°c to -7°c and is used for saving the human lives. There are number of more applications where we are required to use the cooling effect of refrigeration such as computer rooms, TV studios , theaters , aero planes , buses , cars , railway trains ,etc.

Let us analyze why do we need refrigeration?

We need to cool the matter/ substance for the following reasons

1. **To maintain the state of matter / substance. For example, to preserve blood tissues, vegetables and other food articles.**
2. **To cool any matter / substance / space for required purpose or condition of work. For example, cooling of water, cooling of air in the room.**
3. **To change the state of any substance such as production of ice from water.**
4. **To preserve medicines.**

18

UNITS OF REFFRIGERATION:

The unit of refrigeration is TON. It is equivalent to the refrigerating effect produced by melting of 1 TON of ice from and at zero degrees centigrade in 24 hours. Since latent heat of ice is 336 KJ/KG and 1 ton is equal to lOOOkg, the cooling effect produced per minute is 233kj per minute. However its value is taken as 210kj/min. Thus a machine having capacity to produce cooling effect of 210kj/min is rated as lTR.

6

STANDARD TON CONDITIONS:

8

The refrigerating machines are rated under standard-ton conditions which are given below:

Evaporator temperature= -15°C

Condenser temperature= 30°C

Temperature of liquid refrigerant before expansion

valve= 25°C Suction gas temperature= -10$_o$C

POWER REQUIRED FOR TON OF REFRIGERARTION:

From the definition,

COP= N/W

Or

W =N/COP = 210/cop KJ/min (“1 TR =210 KJ/min”)

Power required per TON of refrigeration=3.5/COP KW.

6

4.METHODS OF HEAT TRANSFER

There are three methods of heat transfer by which the substances and the matter exchange heat,

1. **CONDUCTION**
2. **CONVECTION**
3. **RADIATION**

CONDUCTION:

When heat transfer between two substances takes place by direct contact it is called CONDUCTION process of heat transfer. The transfer of heat from molecule to molecule through a substance by chain collision.

CONVECTION:

It is the process of heat transfer by which molecules of liquids and gases move due to the change in temperature and pressure. When we heat a liquid or a gas it will become lighter and it moves upward and the heavier liquid or a gas comes down due to the gravitational force.

It is the important to note here that in the process of convection the transfer of heat does not take place from substance to substance instead in it involves transfer of a heated substance from one place to another.

RADIATION:

It is that process of heat transfer in which transfer of heat takes place through electromagnetic waves. Radio and T.V signals also travel through electromagnetic waves. In radiation process, energy can be transferred to empty place.

It is important to note here that the radiation process does not require any substance or medium for transfer of heat from one place to another as is needed in case of conduction and convection process.

10,11

5.METHODS OF REFRIGERATION:

The refrigeration effect may be produced by bringing the substance to be cooled in direct or indirect contact with cooling medium such as ice. The common methods of refrigeration:

1. **ICE REFRIGERATION**
2. **DRY ICE REFRIGERATION**
3. **AIR EXPANSION REFRIGERATION**
4. **EVAPORATIVE REFRIGERATION**
5. **GAS THROTTLI'NG REFRIGERATION**
6. **STEAM JET REFRIGERATION**
7. **LIQUID GAS REFRIGERATION**
8. **VAPOUR COMPRESSION REFRIGERATION.**
9. **VAPOUR ABSORPTION REFRIGERATION.**

ICE REFRIGERATION:

The quantity of heat required to convert 1 KJ of ice from and at 0° C is 335 KJ (latent heat of fusion, h] =335 KJ). Therefore, ice can be used to produce cold in a confined chamber, which can be used to store vegetables or food.

The ice is kept in a cold cabin at the top level of the insulated container. The arrangement is such that air comes in contact with the metallic surface in which ice is kept and gets cooled. Due to this phenomenon, its density increases and it starts moving downwards and the low density air from the low level moves upwards creating convection currents. Therefore, food. Vegetables, etc. kept in the trays at different levels are cooled down preserved. The cooling of the commodities would contain till ice melts completely. The melted ice water is drained out.

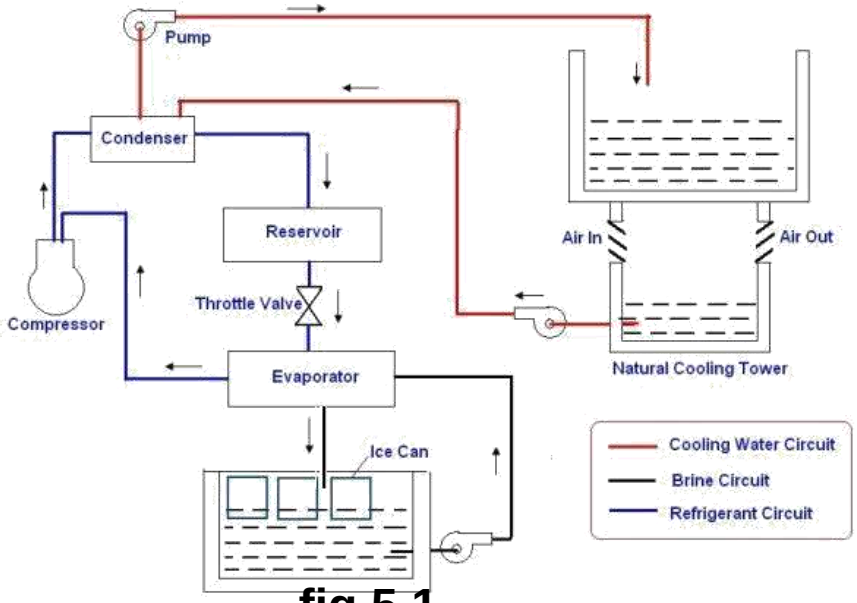

fig 5.1

DRY ICE REFRIGERATION :

Solid carbon di oxide is known as "DRY ICE". The critical point of c02 is 31°C, where as critical pressure is 73.8 bars. To manufacture solid gaseous (:02, carbon di oxide iscompressed to a pressure about of 69 bar and is cooled and at constant pressure to a temperature of 280C and at which it condenses to liquid completely. Expansion of liquid 002 to 1 bar pressure would result in solid c02 (-78.5 ° c) in a good insulated container. The specialty of the solid co2 is that it sublimates into vapor directly, producing cold. Therefore, it is used to preserve the eyeball during the eye surgery.

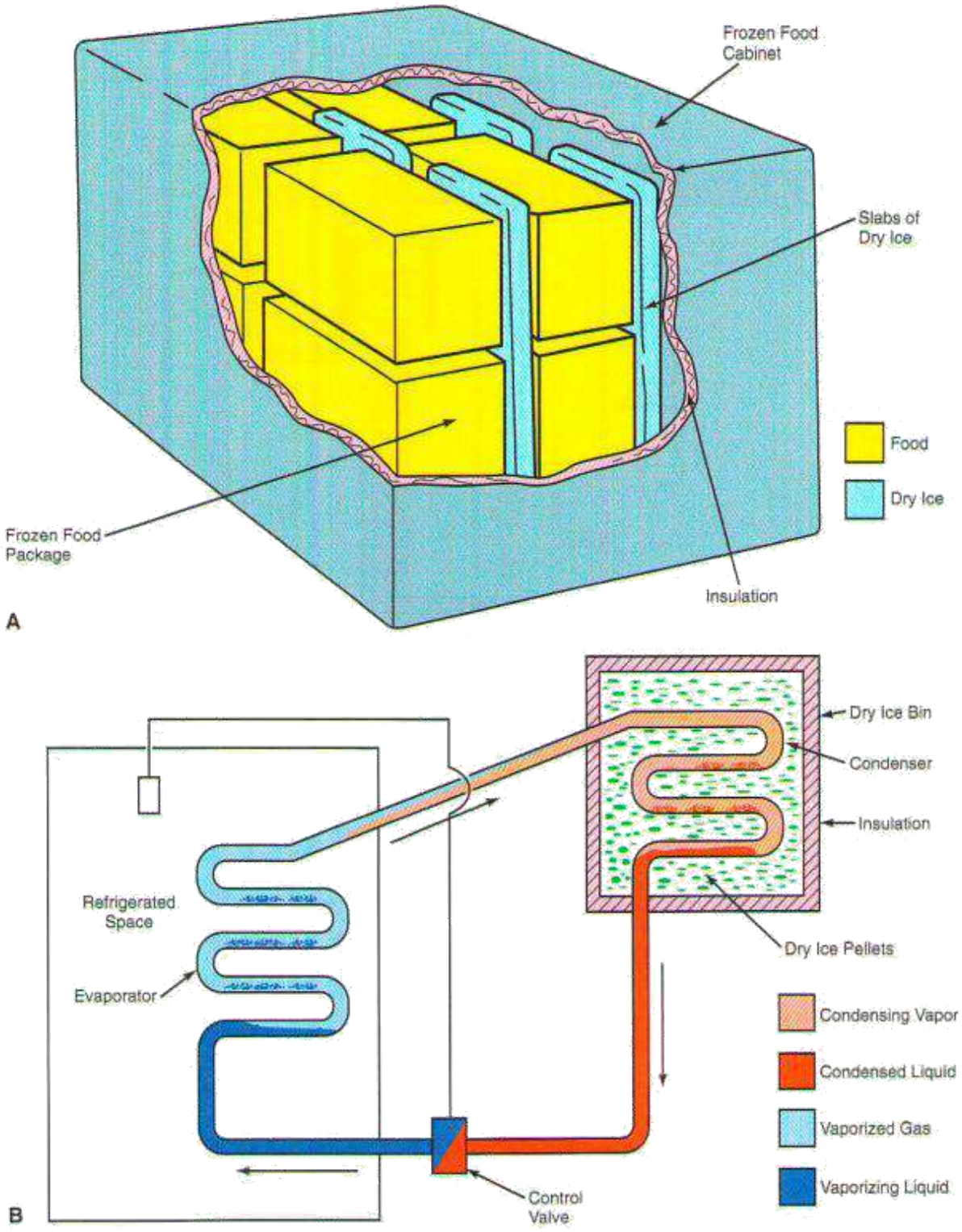

Figure 3-18. *A—Dry ice frozen food container. B—A dry ice refrigerator does not require a compressor.*

fig5.2

AIR EXPANSION REEFRIGERATON:

In this method air is compressed to 5 bars and cooled down at constant pressure. It is then expanded adiabatically to a pressure of 1 bar. This gives the maximum temperature reduction in a given pressure range, because work is done by expense of internal energy which depends on the temperature.

The cold air thus obtained is circulated through the cold chamber to remove heat from the products stored in it.

EVAPORATIVE REFRIGERATION:

This method of generating cold or refrigeration is very old and is used by common people. It can be explained with a simple example of cooling water in a porous pot. Water in the pot percolates through the porous pot. The air surrounding the pot comes in contact with the water and cools down. This is due to the evaporation of water. The heat require for evaporation of water is partially from water and air. In turn, both air and water cools down .since, air is free to move, one does not feel the cold air but the cold in the pot can be felt. The temperature of water in porous pot may be reduced by 5 to 15 ° c compared to the temperature of ambient air. Evaporative refrigeration phenomena can also be employed to produce artificial ice.

The arrangement consists of an air expansion nozzle and water supply line. An evaporative cooling phenomenon is employed in cooling towers and water cooled condensers.

GAS THROTTLING REFRIGEERATION :

During throttling process there is no change in enthalpy, and also for a perfect gas, there is no change in temperature .However, for actual gases there is a substantial change, usually a decrease iii temperature. This temperature drop depends upon the Joule-Thomas coefficient, the pressure drop, and the initial state of the gas.

High pressure gas is throttled through porous plug into the space to be cooled and escapes outside after absorbing heat from the space. This produces the refrigeration effect in space or the products kept in the space.

STEAM JET REFRIGERATION:

It is well known fact that boiling point of water changes as per the pressure. Water boils at 100 ° C at 1 ATM pressure. It boils at 150 0 C if the pressure is 4.785 bar, but it boils at 10 ° Cif its pressure is kept at 1.2276 KPA. Such a low pressure on the surface of water is made by throttling the steam through nozzles.

On evaporation of definite quantity of water, the temperature of water in the chamber may reach 00C. In that case ice formed is pumped out. Steam from the boiler is expanded through a nozzle, this helps to keep away the vapor that is formed due to flashing of water in the flash chamber. The condensate formed flows through the ejector along with the steam into the condenser and he collected condensate is supplied back to the boiler. One would be required to supply the makeup water.

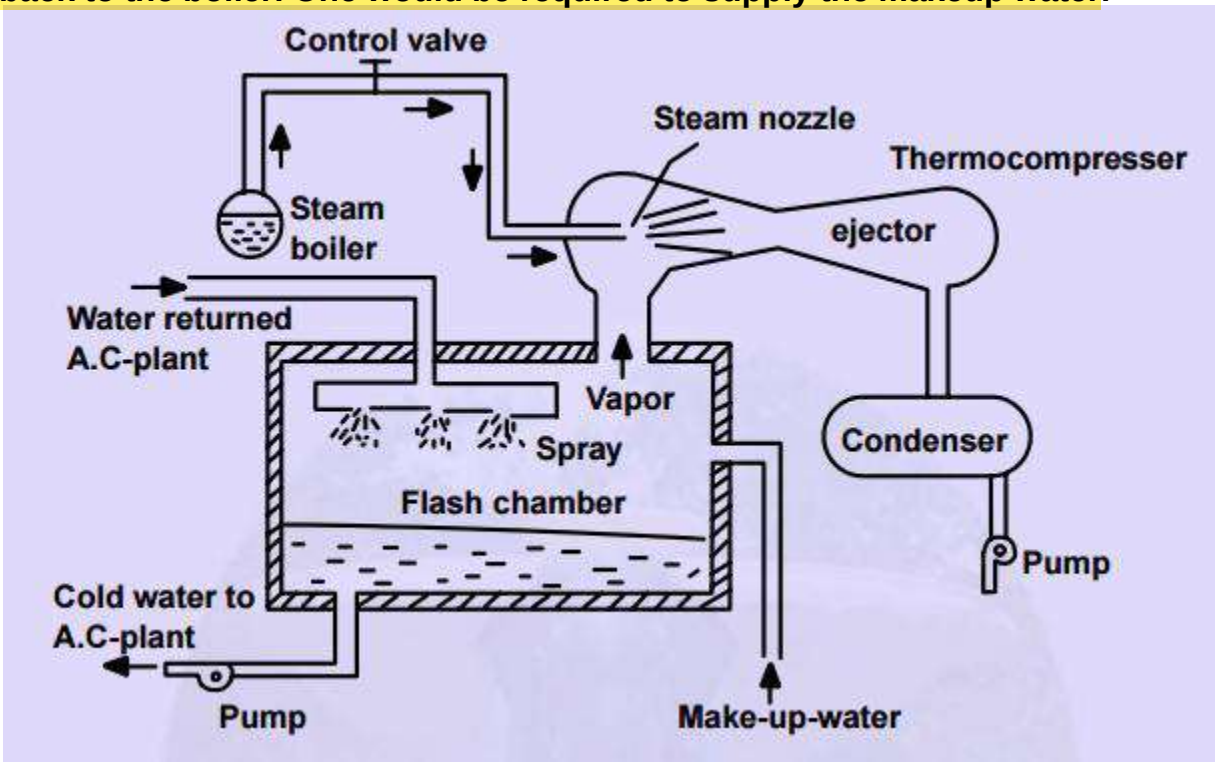

Fig5.3

LIQUID GAS REFRIGERATION:

Liquid such as nitrogen, this is non toxic used for producing refn'geration effect. It is filled in a well-insulated cylinder which is connected to a pipe with intermittent performance. Required quantity of liquid nitrogen is passed through the pipe spared through the perforations into the space to be cooled . The quantity of nitrogen is regulated by means of a Valve. The temperature produced in the space may be -20° C .liquid gases evaporate after absorbing heat, and the gas is released to atmosphere. This method is used for cooling fluids, vegetables, meat, fish and other food stuffs placed in the cold storage. This type of cooling is also used in transporting vehicles carrying food stuffs.

VAPOR COMPRESSION REFRIGERATION:

The vapor-compression uses a circulating liquid as refrigerant the medium which absorbs and removes heat from the space to be cooled and subsequently rejects that heat elsewhere. All such systems have four components: a compressor, a condenser, a thermal expansion valve (also called a throttle valve or metering device), and an evaporator.

VAPOR ABSORPTION REFRIGERATION:

Some 'liquids like water have great affinity for absorbing large quantities of certain vapors (NH3) and reduce the total volume greatly. The absorption refrigeration system differs fundamentally from vapor compression system only in the method of compressing the refrigerant. An absorber, generator and pump in the absorption refrigerating system replace the compressor of a vapor compression system.

6

6.COMPONENTS AND DISCRIPTION

TABLE FAN

Fan is a device for agitating air or gases or moving them from one tocation to another. Mechanical fans with revolving blades are used for ventilation, in manufacturing, in winnowing grain, to remove dust, cuttings, or other waste, or to provide draft for a fire. They are also used to move air for cooling purposes, as in automotive engines and air-conditioning systems, and are driven by belts or by direct motor.

The axial-flow fan (e.g., an electric table fan) has blades that force air to move parallel to the shaft about which the blades rotate. The centrifugal fan has a moving component, called an impeller that consists of a central shaft about which a set of blades form a spiral pattern. When the impeller rotates, air that enters the fan near the shaft is moved away perpendicularly from the shah and out of an opening in the scroll-shaped fan casing.

The Speed of rotation together with the static pressure determines the airflow for a given fan. Where noise is an issue larger, slower-turning fans are quieter than smaller, faster, fans that can move the same airflow. F an noise has been found to be roughly proportional to the fifth power of fan speed; halving speed reduces noise by about 15dB.

fig6.1

COPPER TUBES

Copper tubing is most often used for supply of hot and cold water, and as refrigerant line in HVAC systems. There are two basic types of copper tubing, soft copper and rigid copper. Copper tubing is joined using flare connection, compression connection, or solder. Copper offers a high level of resistance to corrosion, but is becoming very costly. This specification establishes the requirements for seamless round, rectangular, and square copper tubs suitable for general engineering applications.

fig6.2

VINYL TUBE

Vinyl tubing is used in many industries, from manufacturing to health care. Vinyl tubing is used in a wide variety of industries from manufacturing to health care, and in a broad range of applications. As a result, many vinyl-tubing designs have been created. Several properties typically are specified when describing vinyl tubing.Vinyl is an incredibly versatile material used to make tubing for many purposes, from washing machine hoses to supplying water for a hot tub. This guide will explain the different types of flexible vinyl tubing, its various applications in companies and how to select the right vinyl tubing for this project. Whatever this project may be using local the home depot carries a wide range of vinyl tubing for almost any application.

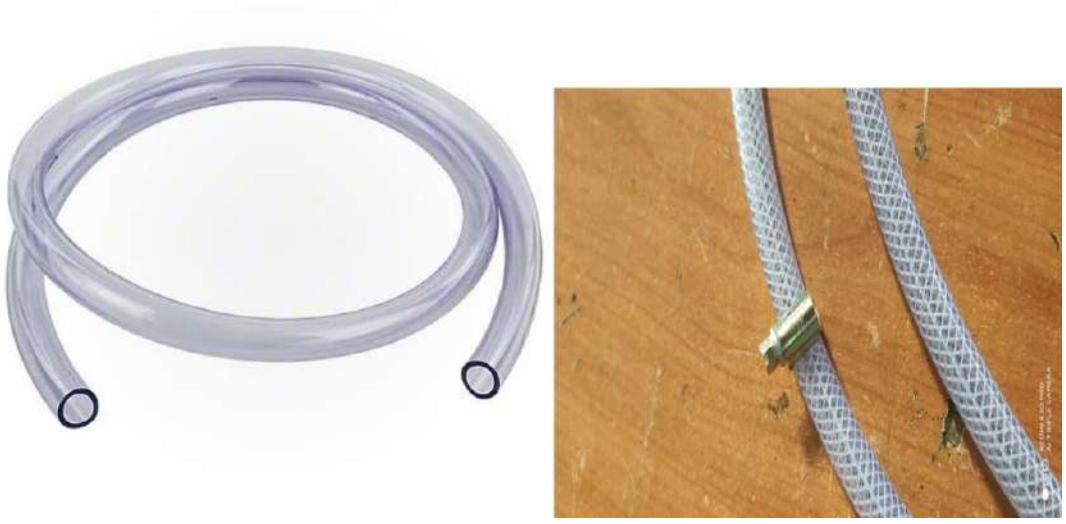

fig6.3

PUMP 6,8

With most water pumps, adapting the inlet or outlet to fit this application is ok and often necessary. It is not recommend restricting inlet size more than 25% or outlet size more than 50%.For instance a Rio HF Pump with a 25 mm outlet can easily be fitted to a 19 mm pipe/tubing if this is what is already in use with your application (if this application from start, matching pump & pipes is best Whenever possible, but with established applications such as pond, this is not always possible without great expense and labor).

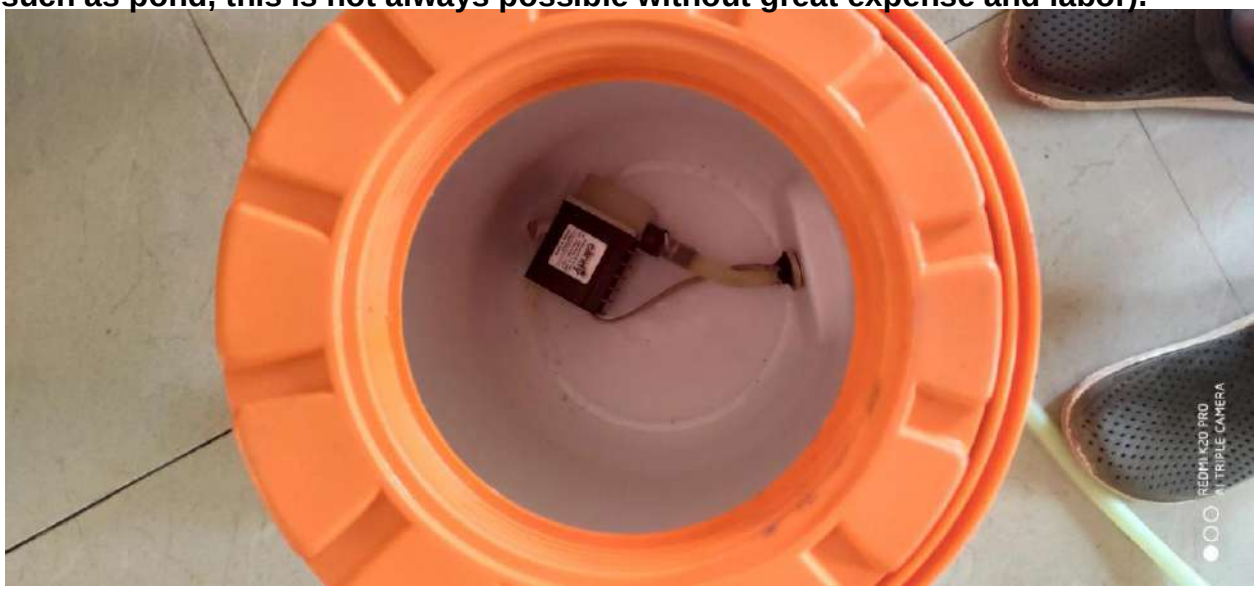

fig6.4

ICE COOLER

A cooler most commonly is an insulated box used to keep food or drink cool. Ice cubes are most commonly placed in it to help the things inside stay cool. Ice packs are sometimes used, as they either contain the melting water inside, or have a gel sealed inside that stays cold longer than plain ice (absorbing heat as it changes phase).The Coleman Company popularized the cooler, most popularly known as an "ice box" in the United States, with its initial offering of a galvanized cooler in 1954. Three years later, Coleman developed a process to make a plastic liner for coolers and jugs.

Coolers are often taken on picnics, and on vacation or holiday. Where summers are hot, they may also be used just for getting cold groceries home from the store, such askeeping ice cream from melting in a hot automobile.

Even without adding ice, this can be helpful, particularly if the trip home will be lengthy.

fig 6.5

7.MODEL CALUCLATIONS& READINGS

Case: Fin of finite length with specified temperature. 10

To determine the temperature distribution:

The governing differential equation as already derived, is given by equation below.

$$Q_x = K \times A_c \times dt/dx.$$ 10

Energy going into element by conduction.

$$Q_x = Q_{(x+dx)} + Q_{conv} \text{-----(1)}$$

We have, $Q_{(x+dx)} = K.A_c.d/dx(T+dt/dx.dx)$

And

$$Q_{conv} = h.A_s\ (T-Ta)$$ **i.e..,**

$$Q_{conv} = h(p.dx)\ (T-T_a).$$

Where, "A_s" is surface area of element.

"P" is perimeter.

Substitute the terms in equation (1).

$$-K.A_c.dt/dx = [-k.A_c.dt/dx - K.A_c. \quad T/d \quad .dx] + h\ (p.dx)\ (T-T_a).$$

Here: m= ——
——

Where: m= mass flow rate, kg/s

h= height of tube

p= perimeter ( )

D= equivalent diameter

A= fin surface area,

K= thermal conductivity. 10

According to the experiment we taken the following notations.

And now we have to determine the solution for temperature distribution.

()= . ℎ(.)+. ℎ(.)

Here,A= 1 = ≫ –

At x=0; T=T1; = 1

B=(2− 1). ℎ(.)÷ ℎ(.)

At x =; T=T2; = 2.

by the above equation we get,

()=1. ℎ .(−)+2. ℎ(.)÷ ℎ(.)

To determine the heat transfer rate:

Q =K. A . m (

Performance of fins:

Fin efficiency= Q /Q

Q_{max}= h.p.L (T_o-T_a)

Fin effectiveness, = . ( )

VALUES FOR CALUCLATION:

1. Tube height(h)=4.877m
2. Diameter of the tube(d)=0.0127m
3. Thermal conductivity of copper(k)=385w/m.k
4. Area of fin(A)= A=πd^2/4=1.6129×10^-4
5. Perimeter (p)=πd=3.14×0.0127=0.039878m

S.NO	Dimension of room(m×m)	Room Temperature (Ta)	Fan temperature without circulation of water(T_1)	Time taken for readings(min)	Room temperature with circulation of water(T_2)
1	4×4	34.1	33.8	5	33.6
2	4×4	34.1	33.8	10	33.4
3	4×4	34.1	33.8	15	33.2
4	4×4	34.1	33.8	20	33.0
5	4×4	34.1	33.8	25	32.9
6	4×4	34.1	33.8	30	32.3
7	4×4	34.1	33.8	35	31.7
8	4×4	34.1	33.8	40	31.3
9	4×4	34.1	33.8	45	30.7
10	4×4	34.1	33.8	50	30.3
11	4×4	34.1	33.8	60	30.1

Final readings taken as per 4 cases:

At case (1): T_1 =33.8 & T_2=30.1

Case (2): T_1=32.4 & T_2=29.2

Case (3): T_1=32.2 & T_2=28.3

Case (4): T_1=32 & T_2=26.3

Mass flow rate, m = $\sqrt{4.877 \times 0.0398 \div 385 \times 0.00016129}$

m= $\sqrt{0.194 \div 0.0620}$

m= $\sqrt{3.13}$

m= 1.769 kg/s

Now case (1):

T_1= 33.8; T_2=30.1

1=273.3 ; 2=277

$$( ) = \frac{273.3 \sin \hbar (1.769(4.877 - 2)) \pm 277(\sin \hbar(1.769 \times 2))}{\sin \hbar(1.769 \times 4.877)}$$

( ) = 9.65°

Q_{fin}= 385× 0.00016129 × 1.769(277 + 273.3) $\frac{(. \times .}{(. \times .))}$

Q_{fin}=60.34

Q_{max}= 4.877× 0.039878 × 1.21(307.1 − 303.1)

Q_{max}= 0.941

η_{fin}= . ÷

η = 64.12%

Case (2);

T_1=32.4 & T_2=29.2

1 = 274.7 ; 2 = 277.9

$$( ) = \frac{274.7 \sin \hbar (1.769(4.877 - 2)) \pm 277.9(\sin \hbar(1.769 \times 2))}{\sin \hbar(1.769 \times 4.877)}$$

( )=9.696°

Q fin= 385× 0.00016129 × 1.769(274.7 + 277.9) (· . × · .)

Q fin=60.06

Q max= 4.877× 0.039878 × 1.21(307.1 − 302.2)

Q max= 1.15

η fin = .·

η = 52.22%

Case (3);

T_1=32.2 & T_2=28.3

1 = 274.9 ; 2 = 278.8

$$( ) = \frac{274.9 \sin \hbar (1.769(4.877 - 2)) \pm 278.8(\sin \hbar(1.769 \times 2))}{\sin \hbar(1.769 \times 4.877)}$$

( )=9.70°

Q_{fin}= 385× 0.00016129 × 1.769(274.9 + 278.8) ((. × .))

Q_{fin}=60.18

Q_{max}= 4.877× 0.039878 × 1.21(307.1 − 301.3)

Q_{max}= 1.36

η_{fin} = .÷

η = 44.25%

Case (4);

T_1=32 & T_2=26.3

1 = 275.1 ; 2 = 280.8

$$( ) = \frac{275.1 \sin \hbar (1.769(4.877 - 2)) \pm 280.8(\sin \hbar(1.769 \times 2))}{\sin \hbar(1.769 \times 4.877)}$$

( )=9.71°

Q_{fin}= 385× 0.00016129 × 1.769(275.1 + 280.8) (. × .) (. × .))

Q_{fin}=60.42

Q_{max}= 4.877× 0.039878 × 1.21(307.1 − 299.3)

Q_{max}= 1.83

η_{fin} = .÷

η = 33.01%

8.TABULAR COLOUMN & GRAPHS

Tabular column:

Number of cases	Temperature(k) T_1	Temperature(k) T_2	Atmospheric temperature(Ta)(K)	Mass flow rate(m)kg/s	Heat transfer rate(Q_{fi})	Q_{max}	Fin efficiency (η fin)
1	305	299.3	307.1	1.769	60.42	1.83	33.01
2	305.2	301.3	307.1	1.769	60.18	1.36	44.25
3	305.4	302.2	307.1	1.769	60.06	1.15	52.22
4	306.8	303.1	307.1	1.769	60.34	0.94	64.12

Graphs:

EFFICIENCY VS TEMPERATURE

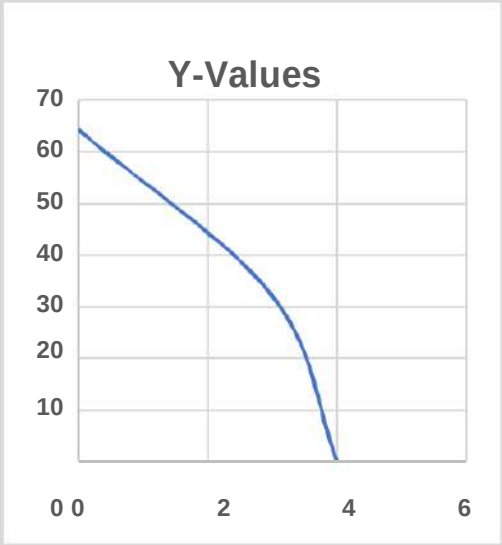

Case 1

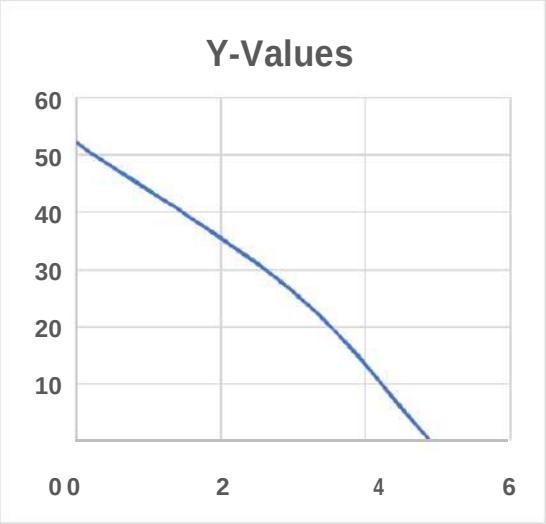

Case 2

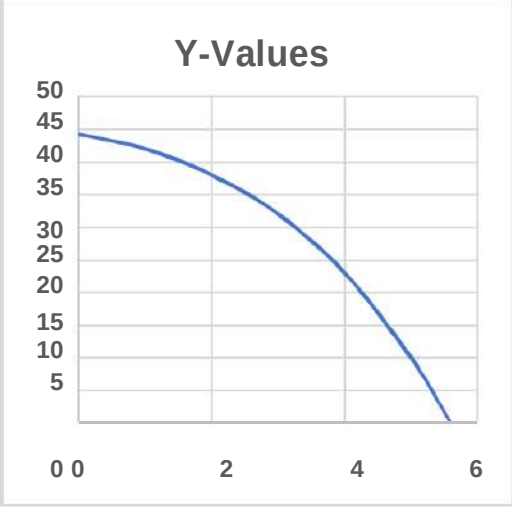

Case 3

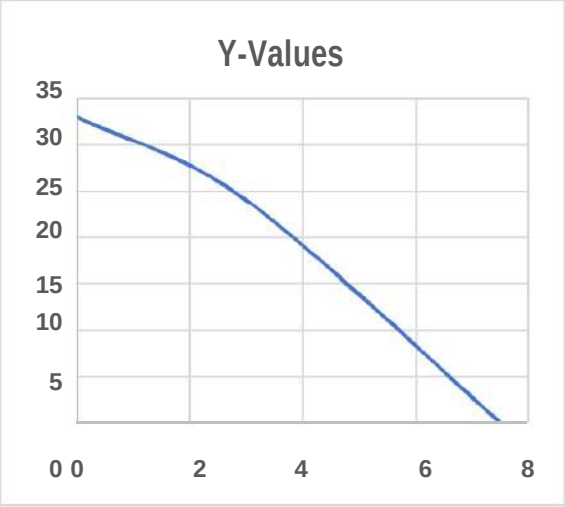

Case 4

9.ADVANTAGES & DISADVANTAGES

Advantages:

1. Give more cold air than ordinary table fan.
2. Low cost compare to air cooler.
3. Consume less electricity compare to air cooler.
4. Construction is easy.
5. Maintenance is easy.
6. Eco friendly.

Disadvantages:

1. Water must be changed frequently.
2. Process is slow as compared to air cooler

10.FABRICATION MODEL

fig 10.1

11.CONCLUSION

This has been valuable experience throughout this project. It gives more opportunity to learn about the copper material. Taking individual curriculum objectives and finding all the possible materials to support them could serve as a good way to evaluate the quality and quantity of the offerings that currently have and make notes for future orders. Finally efficiency obtained can be further improved by actual increase in the output level of the aquarium pump. By selecting suitable material the efficiency can be increased. It will be used for summer season.

12.REFERENCES

1. **J.O.Olorunmaiye (2008). Evaporative Cooling of Water of in earthen pots in Quiscent Air, NSE TECHNICAL TRANSACTIONS VOL.31.NO.3.**
2. **Yang Jeong-Hoon, Kim Taeyeon, Cheong Chang Heon (2013). Supply Airflow Control Algorithm of AFloorStanding Room Air-Conditioner To Achieve Thermal Comfort For Residential Housing In Summer, Building And Environment, Pp: 227-238**
3. **Han Zongwei, Liu Qiankun, Zhang Yanqing, Zhang Shuwei, Liu Jiangzhen, Li Weiliang (2016). Feasibility Study On Novel Room Air Conditioner With Natural Cooling Capability, Applied Thermal Engineering, Pp:1310-1319**

Department of Electronics and Communication Engineering

Academic Year 2019-20

Average percentage of courses that include experiential learning through project work/field work/internship during last five years

Course No	COURSE NAME	Page No
1	ANTENNA AND WAVE PROPOGATION	2-5 , 24-30 , 40 & 50-52
2	MICROWAVE ENGINEERING	9-10 & 12-14
3	SATELLITE COMMUNICATION	18-19
4	EMBEDDED SYSTEMS	1-2,5-6 & 63-64
5	MICROPROCESSORS AND MICRO CONTROLLERS	3-4,7-8,14-19 & 60-61
6	CELLULAR MOBILE COMMUNICATIONS	29-37
7	WIRELESS SENSOR NETWORKS	39-41
8	SATELLITE COMMUNICATION	42-44
9	ELECTRONIC MEASUREMENTS AND INSTRUMENTS	45-49
10	ANALOG COMMUNICATIONS	50-53
11	DIGITAL IC APPLICATIONS	55-57
12	CONTROL SYSTEMS	58-60
13	LINEAR IC APPLICATIONS	62-64

A Project Report

on

MRP JAMMER B.0

Submitted in partial fulfillment of the requirement for the award of the degree of

BACHELOR OF TECHNOLOGY

in

ELECTRONICS AND COMMUNICATION ENGINEERING

Submitted by

B. BHAVANI	**16ME1A0418**
B. MANISHA	**16ME1A0414**
B. RAMYA TEJASWI	**16ME1A0425**
A. SAI PUNEETH	**16ME1A0403**

Under the Esteemed Guidance of

Dr. DOLA SANJAY S
M.Tech., MISTE
Principal

Department of Electronics and Communication Engineering
RAMACHANDRA COLLEGE OF ENGINEERING
(Approved by AICTE, New Delhi, Permanently Affiliated to JNTUK: Kakinada)
Accredited By NAAC & NBA, An ISO 9001:2015 certified Institution
NH 5 Bypass Road, Vatluru (V), ELURU-534 007, W. G. Dist., A. P,
Website: www.rcee.ac.in.

2019-20

BONAFIDE CERTIFICATE

This is to certify that this project report entitled **" MRP JAMMER B.0 "** is being submitted by **B. BHAVANI 16ME1A0418, B. MANISHA 16ME1A0414, B. RAMYA TEJASWI 16ME1A0425 AND A. SAI PUNEETH 16ME1A0403** in partial fulfillment of **BACHELOR OF TECHNOLOGY in ELECTRONICS AND COMMUNICATION ENGINEERING** is a bonafide work carried out under my guidance and supervision during the academic year 2019-2020 and it has been found worthy of acceptance according to the requirement of the university.

Project Guide

Dr. DOLA SANJAY S

M. Tech., MISTE

Principal

Head of the Dept.

Dr. L. BHARATHI

M. Tech.

Professor

Internal Examiner

External Examiner

ACKNOWLEDGEMENTS

Many individuals have contributed towards fulfillment of this work in one or many ways. This work could not have seen light without the help of all these people. It will be our pleasure and responsibility to acknowledge their contributions.

We would like to express our deep sense of gratitude to our guide **Dr. DOLA SANJAY S, Principal,** Department of ECE for his valuable guidance, constant encouragement and fruitful suggestions during the entire period of thisdissertation work.

We thank **Dr. L. BHARATHI, Professor and Head**, Department of ECE for his kind of cooperation, expert guidance and for showing us the right direction when we were lost. We sincerely thank him for his valuable time and enormous patience. We thank him from the bottom of our heart for providing and allowing us to use all the facilities of the department. His Expert guidance, untiring attitude, student centric care is highly acknowledged.

We thank **Prof. Dr. DOLA SANJAY S**, Principal for providing us with all the infrastructural facilities towards successful completion of this work.

We thank **Sri. K. VENUGOPAL**, Secretary and Correspondent, RCE for providing with good academic and research environment in the department.

We thank all the Teaching and Non-Teaching members of the department for their help and encouragement.

We thank our parents, friends, family and all our gurus who stood for us and taught us to stand against all odds in life. We also thank them for educating us in one or other way. We thank almighty for blessing us with necessary strength, courage and a mind set to understand technical aspects.

B. BHAVANI	**16ME1A0418**
B. MANISHA	**16ME1A0414**
B. RAMYA TEJASWI	**16ME1A0425**
A. SAI PUNEETH	**16ME1A0403**

CONTENTS

Chapter no.	Description	Page no.
Chapter 1	**INTRODUCTION**	**01**
	1.1 Introduction	01
	1.2 Basic classification of antenna	02
	1.2.1 Frequency based classification	02
	1.2.2 Aperture based classification	03
	1.3 Polarization based classification	07
	1.3.1 Radiation pattern based classification	08
	1.3.2 Applications of an antenna	08
	1.4 Microwave communication	09
Chapter 2	**LITERATURE SURVEY**	**10**
	2.1 Literature survey	10
	2.1.1 Why use microwaves	11
	2.2 Antenna parameters	17
	2.2.1 Gain and directivity	18
	2.2.2 Antenna polarization	19
	2.2.3 Voltage standing wave ratio	19
	2.2.4 Bandwidth	20
	2.2.5 Return loss	20
	2.2.6 Effect of ground	21
	2.2.7 Front to back ratio	21
	2.2.8 Radiation pattern	21
	2.2.9 Efficiency	22
	2.3 Impedance matching	22
	2.4 Antenna polarizations	23
	2.4.1 Linear polarization	23

2.4.2 Circular polarization 25
2.4.3 Techniques for circular polarization 25
2.4.4 Benefits 26
2.4.5 Applications 26
2.4.6 Techniques for wider bandwidth 27

Chapter 3 EXISTING SYSTEM 28

3.1 Micro strip Band Stop filter 28
3.2 Design goals and specifications 31
3.2.1 Various Design configurations and DB-DGS 31
3.2.2 L-C Modelling of DB-DGS 31
3.2.3 Characteristics of DB-DGS 32
3.3 Waves on Microstrip 34
3.3.1 Performance table of all DB-DGS 35
3.4 Fabrication, measurement and Co-simulation in ADS 36

Chapter 4 PROPOSED SYSTEMS 39

4.1 Antenna designs 39

Chapter 5 HFSS SOFTWARE 40

5.1 Introduction 40
5.2 Ansoft desktop terms 42
5.3 Design flow using for HFSS 43
5.4 Finite element method 44

Chapter 6 RESULTS 48

6.1 Antenna Analysis 48

6.2 Radiation Pattern 49

6.3 Gain 49

6.4 Electric field distribution 50

Chapter 7 CONCLUSION AND FUTURE SCOPE 52

7.1 Conclusion 52

7.2 Future scope 52

Chapter 8 REFERENCES 53

LIST OF FIGURES

Description **Page no.**

1.1 Antenna as a transition device 02
1.2 Dipole antenna 04
1.3 Rectangular – wave guide horns 05
1.4 Slot antenna 06
1.5 Basic microstrip antenna structure 06
1.6 Helical antenna 07
1.7 Microwave transmission link 09
2.1 Polarization of wave 19
2.2 Polarization of antenna 23
2.3 Types of linear polarization of antenna 24
2.4 Types of circular polarization 25
2.5 Dual feed 25
2.6 Single feed 26
3.1 Micro strip band stop filter 28
3.2 Design goals and specifications 31
3.2.1 Various design configurations of DB-DGS 31
3.2.2 L-C modelling of DB-DGS 31
3.2.3 Characteristics of DB-DGS 32
3.3 Waves on Micro strip 34
3.3.1 Performance table of all DB-DGS 35
3.4 Fabrication, measurement and Co-simulation in ADS 36
4.1 Antenna Design 39
5.1 Introduction 40
5.2 Ansoft desktop terms 42
5.3 Design flow using for HFSS 43
5.4 Finite element method 44
6.1 Antenna Analysis 48
6.2 Radiation Pattern 49
6.3 Gain 49
6.4 Electric field distribution 50
7.1 Conclusion 52
7.2 Future scope 52

ABSTRACT

This Paper presents a planar Microstrip Bandstop filter with the utilization of ellipse structure. The bandstop filter has been designed with the use of step impedance microstrip line on the highest of substrate. It produces stopband from the frequency range of **1.8GHZ to 2.3GHZ** with the stop band attenuation quite 30dB. It provides relative 3dB bandwidth response.The tuning of frequency has been administered with the change in dimension of ellipse. A simulation has been performed on ANSYS High frequency structure simulator (HFSS) and therefore the design has been verified with ANSYS designer 8.0 Software.

CHAPTER 1 INTRODUCTION COURSE NO 1

1.1. INTRODUCTION

Since the dawn of civilization, communication has been of foremost importance to mankind. In first place, communication was accomplished by sound through voice. However, as the distance of communication increased, numerous devices were introduced such as horns, drums and so forth. Then visual methods suchas signal flags and smoke signals were used. These optical communication devices ofcourse utilized the light portion of the electromagnetic spectrum. It has been onlyvery recent in human history that the electromagnetic spectrum, outside the visible region, has been employed for communication, through the use of radio. One of humankind's greatest natural resources is the electromagnetic spectrum and the antenna has been instrumental in harnessing this resource. An antenna is a device thatprovides a means for radiating or receiving radio waves.

The radio antenna is an essential component in any radio system. It may be defined as the structure associated with the region of transition between a guided waves on a transmission line to a "free space" wave (and vice versa in the receiving case).In other words, radio antennas couple electromagnetic energy from one medium (space) to another (e.g. wire, coaxial cable, or wave guide).Thus informationcan be transferred between different locations without any intervening structure.Furthermore antennas are required in situations where it is impossible impractical or uneconomical to provide guiding structures between the transmitter and the receiver.

A guided wave travelling along a transmission line, which opens out as in figure 1.1 will radiate as free space wave. The guided wave is a plane wave while the free space wave is an spherically expanding wave. Along the uniform part of the line,energy is guided as a plane wave with little loss, provided the spacing between the wires is a small fraction of a wavelength. At the right, as the transmission line separation approaches a wavelength or more, the wave tends to be radiated so that theopened-out line acts like an antenna, which launched the free space wave. In this vast and dynamic field, the antenna technology has been an indispensable partner of the communication revolution. Many major advances that took place over the years are now in common use.

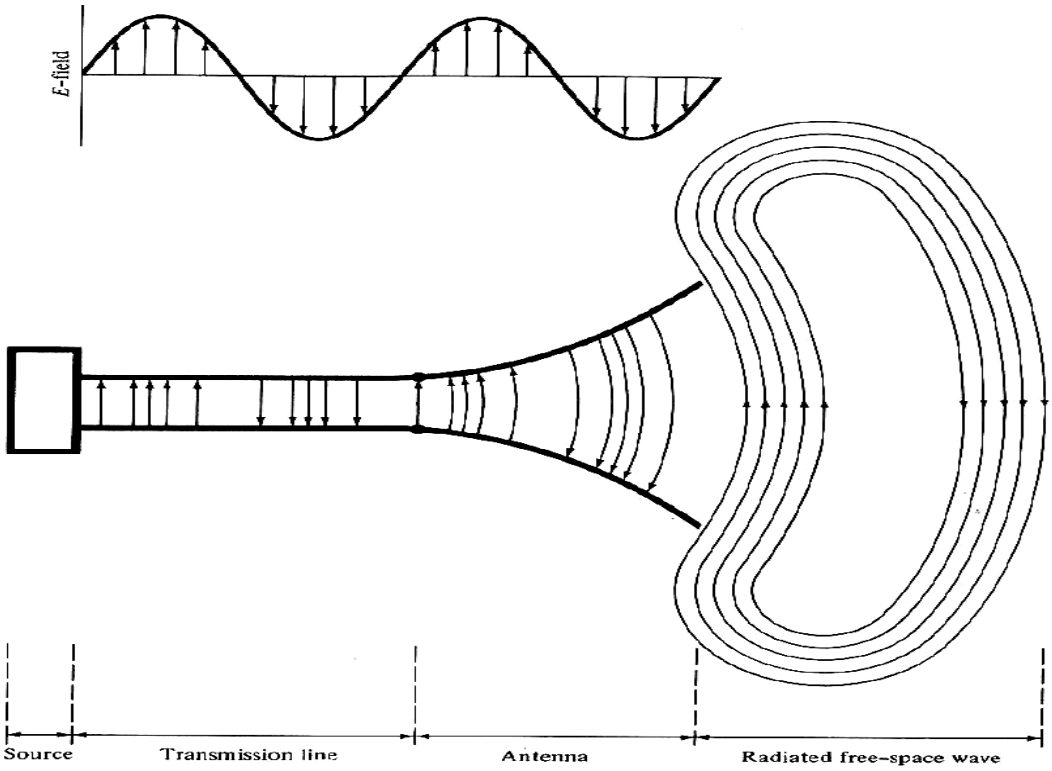

Fig.1.1 Antenna as a Transition Device

1.2. Basics classification of antenna

COURSE NO 1

Antenna can be classified on the basis of

- Frequency
- Aperture
- Polarization
- Radiation

1.2.1. Frequency based classification

Antennas used for HF are different from the ones used for VHF, which in turn are different from antennas for microwave. The wavelength is different at different frequencies, so the antennas must be different in size to radiate signals at the correct wavelength. Many applications are particularly interested in antennas working in the microwave range, especially in the 2.4 GHz and 5 GHz frequencies. At 2.4 GHz the wavelength is 12.5 cm, while at 5 GHz it is 6 cm.

Examples of Antenna on Frequency basis

- Very Low Frequency (VLF) & Low frequency (LF) antenna: Vertical Radiators, Top-loaded Monopoles, T and Inverted L antennas, Triadic antenna, Trideco antenna, Valley-span antenna.
- Medium Frequency (MF) antennas: Radiators (monopoles and dipoles), directional antennas.
- High Frequency (HF) antennas: Log periodic antenna, conical monopole and Inverted Cone antennas, Vertical whip antenna, Rhombic antenna, Fan dipole antenna.
- Very High Frequency (VHF) & Ultra High Frequency (UHF) antennas: YagiUda antennas, log periodic antennas, Helical antennas, Panel antennas, Corner reflector antennas, parabolic antennas, discone antennas,
- Super High Frequency (SHF) & Extremely High Frequency (EHF) antennas: Parabolic antenna, pyramidal horn antennas, discone antennas, monopoles and dipoles antennas, micro strip patch antennas, fractal antennas.

1.2.2. Aperture based classification

Aperture antennas transmit and receive energy from its aperture characterized by a presumed known E-field distribution, they are most utilized for higher frequencies and antenna of this class are very useful for aircraft and space craft applications because they can easily be flush mounted onto the surface of the aircraft or space craft. Furthermore, they can be coated with a dielectric material to cushion them from hazardous conditions of the environment.

- Wire antennas
- Horn Antenna
- Parabolic reflective antenna
- Microstrip antenna
- Helical antenna

Wire antennas: Characterized by a presumed known current distribution, these are the oldest and still the most prevalent of all antenna configurations and they can be seen virtually anywhere. There are different shapes of wire antennas such as a straight wire (dipole), loop and helix.

In radio and telecommunications a dipole antenna or doublet is the simplest and most widely used class of antenna It consists of two identical conductive elements such as metal wires or rods, which are usually bilaterally symmetrical. The driving current from the transmitter is applied, or for receiving antennas the output signal to the receiver is taken, between the two halves of the antenna. Each side of the feed line to the transmitter or receiver is connected to one of the conductors. This contrasts with a monopole antenna, which consists of a single rod or conductor with one side of the feed line connected to it, and the other side connected to some type of ground. A common example of a dipole is the "rabbit ears" television antenna found on broadcast television sets.The dipole antenna is simply two wires pointed in opposite directions arranged either horizontally or vertically, with one end of each wire connected to the radio and the other end hanging free in space. Generally, the dipole is considered to be Omnidirectional in the plane perpendicular to the axis of the antenna, but it has deep nulls in the directions of the axis. Variations of the dipole include the folded dipole, the half wave antenna, the ground plane antenna, the whip, and the J-pole.

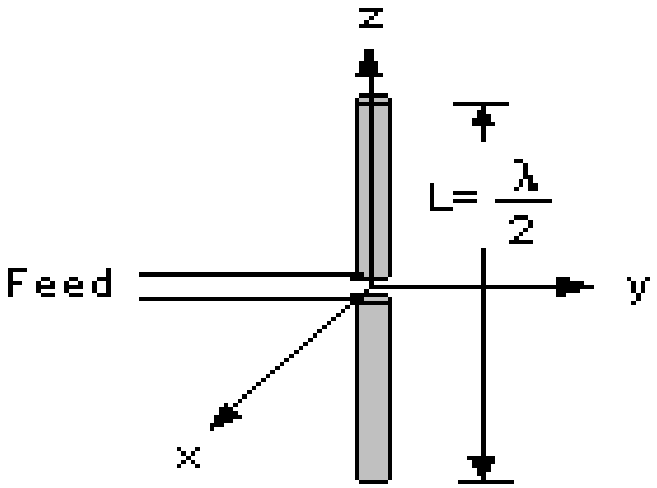

Fig 1.2 Dipole Antenna

Horn antenna: A horn antenna or microwave horn is an antenna that consists of a flaring metal waveguide shaped like a horn to direct radio waves in a beam. Horns are widely used as antennas at UHF and microwave frequencies, above 300 MHz.

There are several types of horn antenna

- Pyramid horn antenna
- Sectoral horn antenna

- Conical horn antenna
- Exponential horn antenna
- Corrugated horn

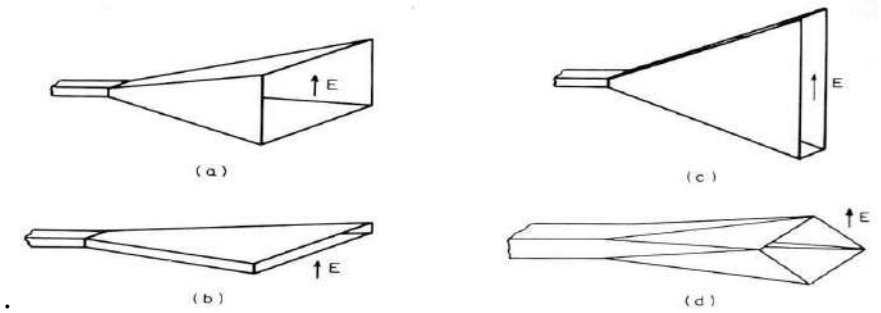

Fig.1.3 Rectangular –Waveguide Horns (a) Pyramidal (b) Sectoral H-plane (c) Sectoral E-plane (d) Diagonal

Parabolic antenna

A parabolic antenna is an antenna that uses a parabolic reflector, a curved surface with the cross-sectional shape of a parabola, to direct the radio waves. The most common form is shaped like a dish and is popularly called a dish antenna or parabolic dish. Parabolic antennas are used as high-gain antennas for point-to-point communications, in applications such as microwave relay links that carry telephone and television signals between nearby cities, wireless WAN/LAN links for data communications, satellite communications and spacecraft communication antennas.

Slot antenna

A slot antenna consists of a metal surface, usually a flat plate, with a hole or slot cut out. When the plate is driven as an antenna by a driving frequency, the slot radiates electromagnetic waves in similar way to a dipole antenna. The shape and size of the slot, as well as the driving frequency, determine the radiation distribution pattern. Often the radio waves are provided by a waveguide, and the antenna consists of slots in the guide.

Fig.1.4 Slot antenna

Applications of slot antenna

Slot antennas are widely used in radar antennas, for the sector antennas used for cell phone base stations, and are often found in standard desktop microwave sources used for research purposes.

Disadvantages of slot antenna

- It has narrow operational band width.
- Matching of high impedance slot relatively.
- Relatively low impedance cable

Rectangular patch antenna: The patch antenna consists mainly sheet of conductor mounted over a ground plane. It consists of a flat sheet or "patch" of metal, mounted over a larger sheet of metal called a ground plane. This can be fabricated by etching the antenna element pattern in metal trace bonded to an insulating dielectric substrate, such as a printed circuit board, with a continuous metal layer bonded to the opposite side of the substrate which forms a ground plane.

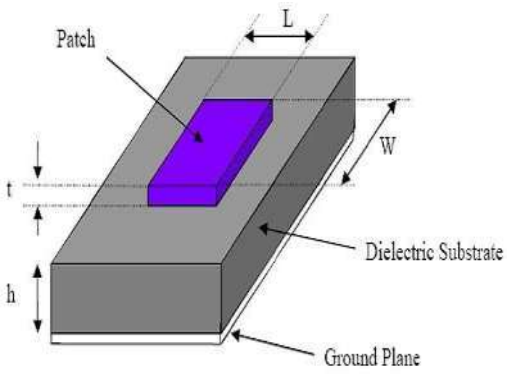

Fig.1.5 Basic Micro strip Antenna Structure

Helical antennas: The basic helical antenna consists of a single conductor wound into a helical shape, shown in Figure 1.4.5A helical antenna is an antenna consisting of a conducting wire wound in the form of a helix. In most cases, helical antennas are mounted over a ground plane. The feed line is connected between the bottom of the helix and the ground plane. Helical antennas can operate in one of two principal modes those are normal mode and axial mode.

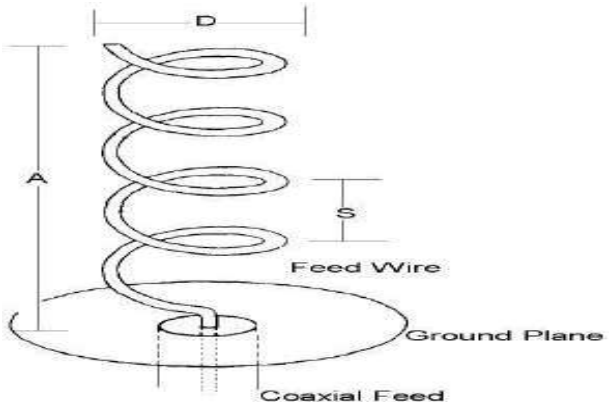

Fig.1.6 Helical Antenna

1.3. Polarization based classification

The polarization of an electromagnetic wave is defined as the orientation of the electric field vector. Antenna polarization is governed by the polarization of Electromagnetic waves. Based on that:

- Linearly (Vertically/Horizontally) Polarized antenna.
- Circularly Polarized antenna.

Linearly (vertically/horizontally) polarized antenna: If antenna is transmitting/receiving Vertical E field vector, then antenna is said to be vertically polarized antenna. If antenna is transmitting/receiving horizontal E field vector, then antenna is said to be horizontally polarized antenna.

Circularly polarized antenna: If the antenna is able to transmit or receive E field vectors of any orientation, then antenna is said to be circularly polarized antenna. There are two types of circular polarization. If the field rotation is clockwise then

right-hand circular polarized (RHCP) or if the field rotation is counter clockwise then left hand circular polarized (LHCP)

1.3.1. Radiation pattern based classification:

On the basis of radiation pattern antenna can be classified as

- Isotropic antenna.
- Omni directional antenna.
- Directional antenna.
- Hemispherical antenna.

1.3.2. APPLICATIONS OF AN ANTENNA

- Global Positioning Satellite
- Paging and cellular phone
- Personal communication system
- Radio telescopes
- Point to point communications

Frequency Band	Designation	Typical service
3-30 KHz	Very Low frequency (VLF)	Navigation, SONAR.
30-300 KHz	Low Frequency (LF)	Radio beacons, Navigational Aids.
300-3000 KHz	Medium Frequency (MF)	AM broadcasting, maritime radio, coast guard communication, direction finding.
3-30 MHz	High Frequency (HF)	Telephone, Telegraph and Facsimile, amateur radio, ship-to-coast and ship-to-aircraft communication.
30-300 MHz	Very High Frequency (VHF)	Television, FM broadcast, air traffic control, police, navigational aids.
300-3000 MHz	Ultra High Frequency (UHF)	Television, satellite communication, radiosonde, surveillance RADAR, navigational aids.
3-30 GHz	Super High Frequency (SHF)	Airborne RADAR, Microwave Links, Satellite Communication.
30-300 GHz	Extremely High Frequency (EHF)	RADAR, Experimental

Table.1.1 Applications of Antennas

1.4. MICROWAVE COMMUNICATION

COURSE NO 2

Microwave communication is the transmission of signals via radio using a series of microwave towers. Microwave communication is known as a form of line of sight communication, because there must be nothing obstructing the transmission of data between these towers for signals to be properly sent and received.

The objective of microwave communication systems is to transmit information from one place to another without interruption, and clear reproduction at the receiver. Below Fig indicates how this is achieved in its simplest fo.

The "line-of-sight" nature of microwaves has some very attractive advantages over cable systems. Line of sight is a term which is only partially correct when describing microwave paths. Atmospheric conditions and certain effects modify the propagation of microwaves so that even if the designer can see from point A to point B (true line of sight), it may not be possible to place antennas at those two points and achieve a satisfactory communication performance.

In order to overcome the problems of line-of-sight and power amplification of weak signals, microwave systems use repeaters at intervals of about 25 to 30 km in between the transmitting receiving stations. The first repeater is placed in line-ofsight of the transmitting station and the last repeater is placed in line-of-sight of the receiving station. Two consecutive repeaters are also placed in line-of-sight of each other. The data signals are received, amplified, and re-transmitted by each of these stations.

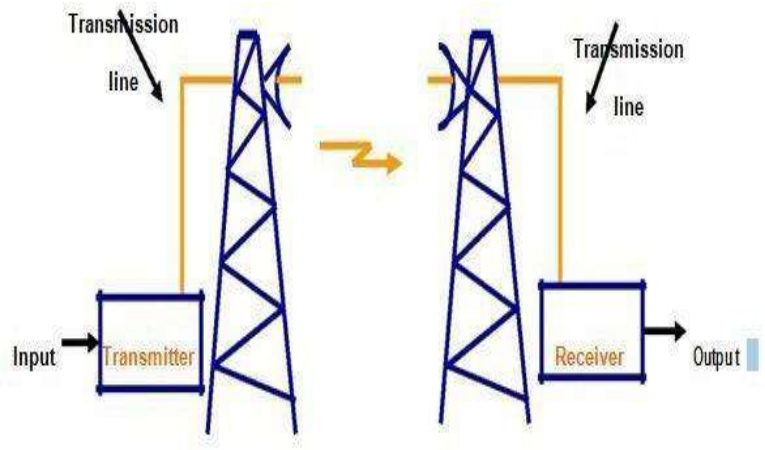

Fig.1.7 Microwave transmission link

CHAPTER 2 LITERATURE SURVEY COURSE NO 2

2.1. Literature survey

The history of microwave communications includes major discoveries of Morse, Maxwell, Hertz, Marconi, and other pioneers of the radio and electronics fields. This paper traces the early work which led to wireless communications and thelong struggle to achieve practical microwave radio. Even though the first microwave line-of-sight systems were demonstrated and placed in service during the 1930's, it was not until the late 1940's and early 1950's that huge transcontinental microwave transmission systems were implemented. The 1960's and 1970's witnessed significant progress in the technology and application of line-of-sight microwave communication systems. Other microwave systems including tropo scatter, satellite, and milli meter waveguide transmission systems were also developed during the 1960's and 1970's. The past 100 years have witnessed very significant breakthroughs in radio technology, particularly at microwave frequencies, that have had an

enormous impact on the world's societies through improved communications for the populace, business, and governments.

Enormous strides in the development of microwave technology were made during World War II, with the bulk of the effort aimed at radar systems. South worth's waveguide group at Bell Labs become heavily involved in this effort and invented many waveguide components for radar, including waveguide lobe switches, rotary joints, improved filters, waveguide modulators and demodulators, phasing devices, waveguide hybrids including the magic-tee, directional couplers, attenuators, power measuring devices and other instruments. While these components were extremely useful for the radar work, they were also applicable for communication systems.

The technology used for microwave communication was developed in the early1940's by Western Union. The first microwave message was sent in 1945 from towers located in New York and Philadelphia. Following this successful attempt, microwave communication became the most commonly used data transmission method for telecommunications service providers.

2.1.1. Why use microwaves

Communication using electromagnetic radiation (except for light) began early in this century, and most early practical systems used very long wavelengths (low frequencies) which travelled great distances. Eventually, electronics were developed, including the vacuum tube (or "valve") which allowed controlled frequencies and modulation. This led to the use of higher frequencies, many channels, and commercial and industrial radio. During the 1930's and 1940's various experimenters discovered that higher frequencies could bring other advantages to communications. Some of these experimenters were government agencies and the military - some wereuniversities, and some were private individuals.

Among these discoveries were that microwaves are easier to control (than longer wavelengths) because small antennas could direct the waves very well. One advantage of such control is that the energy could be easily confined to a tight beam (expressed as narrow beam width). This beam could be focused on another antenna dozens of miles away, making it very difficult for someone to intercept the conversation. Another characteristic is that because of their high frequency, greater

amounts of information could be put on them (expressed as increased modulation bandwidth). Both of these advantages (narrow beam width and modulation bandwidth) make microwaves very useful for RADAR as well as communications.

Eventually, these qualities led to the use of microwaves by the telephone companies. They placed towers every 30 to 60 miles each with antennas, receivers and transmitters. These would relay hundreds or even thousands of voice conversations across the country. The ability to modulate with a wide bandwidth permitted so many conversations on just one signal, and the reduction in beam width made this reasonably secure. In the 1950s experiments were conducted that showed the potential to connect the two coasts of the US via these microwave circuits to produce television programming on a continental basis, and true television networks were born.

A photon is a quantum of electromagnetic energy. Physicists think of electromagnetic energy as having a "dual nature", in that some experiments reveal its nature as a particle which we call a photon and other experiments reveal its nature as a wave. When it comes to lower frequencies (longer wavelengths), such as microwaves,VHF, and the like, it becomes much less convenient to think of energy in the form of photons, but there is no specific reason to decide that only one nature exists at these longer wavelengths. Sometimes photons are referred to when describing an RF interaction with matter.

Here are some frequency bands, exact frequencies, approximate wavelength and their applications.

Table.2.1 Microwave frequency bands

SL. No	Frequency Band	Frequency	Wavelength	Application
1	ELF (Extreme Low Frequency)	30-300 Hz	10,000-1,000 Km	Radio band & radio Communication

2	VF (Voice Frequency)	300-3,000 Hz	1,000-100 Km	Transmits voice signal
3	VLF (Very Low Frequency)	3-30 kHz	100-10 km	Communicate with submarines near the surface, radio navigation beacons (alpha) and time signals (beta), electromagnetic
4	LF (Low Frequency)	30-300 kHz	10-1 km	AM broadcasting as the long wave band, aircraft beacon, navigation (LORAN), information, and weather systems
5	MF (Medium Frequency)	300-3,000 KHz	1-0.1 km	Non-directional navigational radio beacons (NDBs) for maritime and aircraft navigation

6	HF (High Frequency)	3-30 MHz	100-10 m	Amateur radio operators, who can take advantage of direct, long-distance (often inter-continental) communications and the "thrill factor" resulting from making contacts in variable conditions
7	VHF (Very High Frequency)	30-300 MHz	10-1 m	Identify faults and defects in ceramic insulators
8	UHF (Ultra High Frequency)	300-3,000 MHz	100-10 cm	Transmission of television signals
9	SHF (Super High Frequency)	3-30 GHz	10-1 cm	Microwave devices, WLAN, most modern Radars
10	EHF (Extreme High Frequency)	30-300 GHz	1-0.1 cm	Radio astronomy and remote sensing

11	Decimillimeter	300-3,000 GHz	1-0.1 mm	Transmits signal
12	P Band	0.23-1 GHz	130-30 cm	Radar
13	L Band	1-2 GHz	30-15 cm	Satellite
14	S Band	2-4 GHz	15-7.5 cm	Weather radar, surface ship radar, and some Communications satellites, especially those used by NASA to communicate with the Space Shuttle and the International Space Station
15	C Band	4-8 GHz	7.5-3.75 cm	Long-distance radio Telecommunications
16	X Band	8-12.5 GHz	3.75-2.4 cm	Radar receivers, electronic counter measures, decoys, jammers, and phased array systems
17	Ku Band	12.5-18 GHz	2.4-1.67 cm	Satellite communications
18	K Band	18-26.5 GHz	1.67-1.13 cm	Conforming bandage to hold dressings in place

19	Ka Band	26.5-40 GHz	1.13-0.75 cm	Satellite communication
20	Millimeter wave	40-300 GHz	7.5-1 mm	Transmitting large amounts of computer data, cellular communications, and radar

Applications

Microwave communication systems handle a large fraction of the world's international and other long haul telephone, data and television transmissions. Mostof the currently developing wireless telecommunications systems, such as direct broadcast satellite (DBS) television, personal communication systems (PCSs), wireless local area networks (WLANS), cellular video (CV) systems and globalpositioning satellite (GPS) systems rely heavily on microwave technology.

Long distance telephone calls

Before the advent of fiber-optic transmission, most long distance telephone calls were carried via networks of microwave radio relay links run by carriers such as AT&T Long Lines. Starting in the early 1950s, frequency division multiplex was used to send up to 5,400 telephone channels on each microwave radio channel, with as many as ten radio channels combined into one antenna for the hop to the next site, up to 70 km away.

Wireless LAN protocols

Wireless LAN protocols, such as Bluetooth and the IEEE 802.11 specifications, also use microwaves in the 2.4 GHz ISM band, although 802.11a uses ISM band and UNII frequencies in the 5 GHz range. Licensed long-range (up to about 25 km) Wireless Internet Access services have been used for almost a decade in manycountries in the 3.5–4.0 GHz range. The FCC recently carved out spectrum for carriers that wish to offer services in this range in the U.S. — with emphasis on 3.65 GHz. Dozens of service providers across the country are securing or have already received licenses from the FCC to operate in this band. The WIMAX service offerings that can be carried on the 3.65 GHz band will give business customers another option for connectivity.

Metropolitan area networks

MAN protocols, such as WiMAX (Worldwide Interoperability for Microwave Access) based in the IEEE 802.16 specification. The IEEE 802.16 specification was designed to operate between 2 to 11 GHz. The commercial implementations are inthe 2.3 GHz, 2.5 GHz, 3.5 GHz and 5.8 GHz ranges.

Wide Area Mobile Broadband Wireless Access

MBWA protocols based on standards specifications such as IEEE 802.20 or ATIS/ANSI HC-SDMA are designed to operate between 1.6 and 2.3 GHz to give mobility and in-building penetration characteristics similar to mobile phones but with vastly greater spectral efficiency.

Some mobile phone networks, like GSM, use the low-microwave/high-UHF frequencies around 1.8 and 1.9 GHz in the America and elsewhere, respectively. DVB-SH and S-DMB use 1.452 to 1.492 GHz, while proprietary/incompatible satellite radio in the U.S. uses around 2.3 GHz for DARS.

Microwave radio is used in broadcasting and telecommunication transmissions because, due to their short wavelength, highly directional antennas are smaller and therefore more practical than they would be at longer wavelengths (lower frequencies). There is also more bandwidth in the microwave spectrum than in the

rest of the radio spectrum; the usable bandwidth below 300 MHz is less than 300 MHz while many GHz can be used above 300 MHz. Typically, microwaves are used in television news to transmit a signal from a remote location to a television station from a specially equipped van. See broadcast auxiliary service (BAS), remote pickup unit (RPU), and studio/transmitter link (STL).

Satellite communications systems

Most satellite communications systems operate in the C, X, Ka, or Ku bands of the microwave spectrum. These frequencies allow large bandwidth while avoiding the crowded UHF frequencies and staying below the atmospheric absorption of EHF frequencies. Satellite TV either operates in the C band for the traditional large dish fixed satellite service or Ku band for direct-broadcast satellite. Military communications run primarily over X or Ku-band links.

Radar

Radar uses microwave radiation to detect the range, speed, and other characteristics of remote objects. Development of radar was accelerated during World War II due to its great military utility. Now radar is widely used for applications such as air traffic control, weather forecasting, navigation of ships, and speed limit enforcement.

Radio astronomy

Most radio astronomy uses microwaves. Usually the naturally-occurring microwave radiation is observed, but active radar experiments have also been done with objects in the solar system, such as determining the distance to the Moon or mapping the invisible surface of Venus through cloud cover.

Navigation

Global Navigation Satellite Systems (GNSS) including the Chinese Beidou, the American Global Positioning System (GPS) and the Russian GLONASS broadcast navigational signals in various bands between about 1.2 GHz and 1.6 GHz.

Advantages

The various advantages of microwave communications are as follows:

- Large bandwidth availability.
- Less power requirement with the use of repeaters.
- Easily penetrable to the areas like even the ionosphere.
- Line of sight propagation.
- Reduces the size of the antenna.
- Can accommodate more number of channels.
- No cabling needed between sites.
- Multichannel transmission.
- Provides a high data rate.
- Cost of purchasing towers for transmission is pretty low.

2.2. ANTENNA PARAMETERS

The following are the antenna parameters

- Gain and Directivity
- Antenna Polarization
- Voltage Standing Wave Ratio (VSWR)
- Bandwidth
- Return Loss
- Effect of Ground
- Front to Back Ration
- Radiation Pattern
- Efficiency
- Impedance Matching

2.2.1. Gain & Directivity

Directivity is the ability of an antenna to focus energy in a particular direction.

"Directivity (of an antenna) is the ratio of the radiation intensity in a given direction from the antenna to the radiation intensity averaged over all directions". Note that the radiation intensity is equal to the total power radiated by the antenna divided by 4π. Directivity is always greater than one. The directive gain is "the ratio of the radiation intensity, in a given direction to the radiation intensity that would be obtained if the power accepted by the antenna were radiated isotropically". We can obtain gain from directivity of the antenna.

2.2.2. Antenna Polarisation

Both RF antennas and electromagnetic waves are said to have a polarization. For the electromagnetic wave the polarization is effectively the plane in which the electric wave vibrates. This is important when looking at antennas because they are sensitive to polarization, and generally only receive or transmit a signal with a particular polarization. For most antennas it is very easy to determine the polarization. It is simply in the same plane as the elements of the antenna. So a vertical antenna will receive vertically polarized signals best and similarly a horizontal antenna will receive horizontally polarized signals.

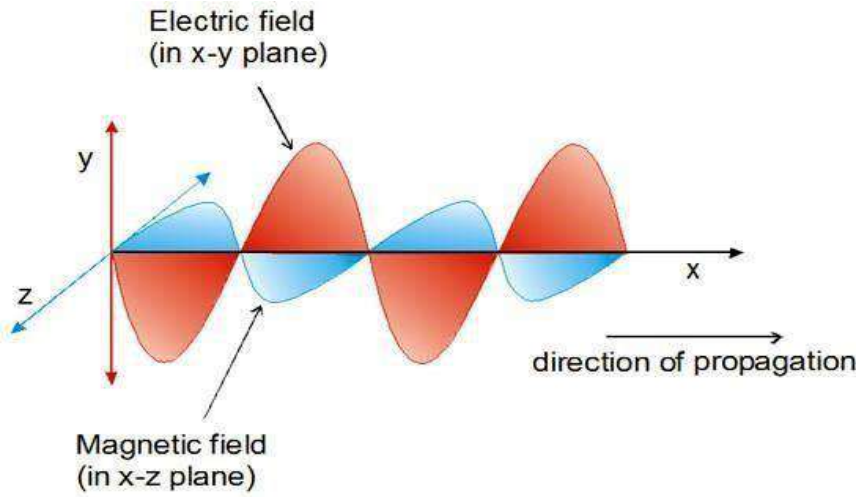

Fig 2.1 polarization of wave

2.2.3. Voltage Standing Wave Ratio

The standing wave ratio (SWR), also known as the voltage standing wave ratio (VSWR), is not strictly an antenna characteristic, but is used to describe the performance of an antenna when attached to a transmission line. It is a measure of how well the antenna terminal impedance is matched to the characteristic impedance of the transmission line. Specifically, the VSWR is the ratio of the maximum to the minimum RF voltage along the transmission line. The maxima and minima along the lines are caused by partial reinforcement and cancellation of a forward moving RF signal on the transmission line and its reflection from the antenna terminals. Theoretically VSWR can have values between 1 to infinity, If u want to comment on performance of an antenna if it maintains VSWR <2 then it is good antenna over the range of frequencies which it maintains VSWR <2. If the values are below 1.5 then itis excellent antenna, if VSWR is >2 then it's unacceptable.

2.2.4. Bandwidth

Most RF antenna designs are operated around the resonant point. This means that there is only a limited bandwidth over which an RF antenna design can operate efficiently. Outside this the levels of reactance rise to levels that may be too high for satisfactory operation. Other characteristics of the antenna may also be impaired away from the centre operating frequency. The antenna bandwidth is particularly important where radio transmitters are concerned as damage may occur to the transmitter if the antenna is operated outside its operating range and the radio transmitter is not adequately protected. In addition to this the signal radiated by the RF antenna may be less for a number ofreasons. For receiving purposes the performance of the antenna is less critical in some respects. It can be operated outsideits normal bandwidth without any fear of damage to the set. Even a random length of wire will pick up signals, and it may be possible to receive several distant stations. However for the best reception it is necessary to ensure that the performance of the RF antenna design is optimum.

Impedance Bandwidth

Feed line produces impedance when this impedance matches with input impedance of the patch antenna, the power transferred to the antenna over the frequencies when matching occurs that frequency range is called impedance bandwidth.

2.2.5. Return Loss

Return loss is one of the important parameter to calculate the efficiency of the antenna over the range of frequencies. It indicates how much power is transmitted & how much power is reflected to the origin. Theoretically return loss is 0dB but practically it is impossible to maintain 0dB, so practically if the antenna maintains less than 10dB over the frequencies then it is good antenna.

2.2.6. Effect of Ground

Antennas are typically used in an environment where other objects are present that have an effect on their performance. Height above ground has a significant effect on radiation pattern of some antennas. At frequencies used in antennas, the ground behaves mainly as a dielectric. The conductivity of ground at these frequencies is negligible. When an electromagnetic wave arrives at the surface of an object, two waves are created: one enters the dielectric and the other is reflected. If the object is a conductor, the transmitted wave is negligible and the reflected wave has almost the same amplitude as the incident one. When the object is a dielectric, the fraction reflected depends on angle of incidence. When angle of incidence is small most of the energy traverses the surface and very little is reflected. When angle of incidenceis near 90° almost all the wave is reflected.

2.2.7. Front to Back Ratio

Front-to-back ratio is the ratio of power gain between the front and rear of a directional antenna and ratio of signal strength transmitted in a forward direction to that transmitted in a backward direction. For receiving antennas, the ratio of received-signal strength when the antenna is rotated 180°. The ratio compares the antenna gain in a specified direction, i.e., azimuth, usually that of maximum gain, to

the gain in a direction 180° from the specified azimuth. A front-to-back ratio is usually expressed in dB. In point-to-point microwave antennas, a "high performance"antenna usually has a higher front to back ratio than other antennas.

2.2.8. Radiation Pattern

The radiation pattern of an antenna is a plot of the relative field strength of the radio waves emitted by the antenna at different angles. It is represented by a three dimensional graph or polar plots of the horizontal and vertical cross sections. The pattern of an ideal isotropic antenna, which radiates equally in all directions, would look like a sphere.

Many non-directional antennas, such as monopoles and dipoles, emit equal power in all horizontal directions, with the power dropping off at higher and lower angles; this is called an Omni directional pattern and when plotted looks like a torus or donut.
The radiation of many antennas shows a pattern of maxima or "lobes" at various angles separated by "nulls", angles where the radiation falls to zero. This is because the radio waves emitted by different parts of the antenna typically interfere, causing maxima at angles where the radio waves arrive at distant points in phase, and zero radiation at other angles where the radio waves arrive out of phase. In a directional antenna designed to project radio waves in a particular direction, the lobe in that direction is designed larger than the others and is called the "main lobe". The other lobes usually represent unwanted radiation and are called "side lobes". The axis through the main lobe is called the "principal axis" or "bore sight axis".

2.2.9. Efficiency

Efficiency of a transmitting antenna is the ratio of power actually radiated in all directions to the power absorbed by the antenna terminals. The power supplied to the antenna terminals which is not radiated rather converted into heat. This is through loss resistance in the antenna's conductors but can also be due to dielectric or magnetic core losses in antennas using such components. Such loss effectively robs power from the transmitter requiring a stronger transmitter in order to transmit a signal of a given strength. Note that antenna efficiency is a separate issue from impedance matching, which may also reduce the amount of power radiated using a

given transmitter. If an SWR meter reads 150 W of incident power and 50 W of reflected power that means that 100 W have actually been absorbed by the antenna ignoring transmission line losses. How much of that power has actually been radiated cannot be directly determined through electrical measurements at the antenna terminals, but would require careful measurement of field strength.

2.3. Impedance Matching

Maximum power transfer requires matching the impedance of an antenna system looking into the transmission line to the complex conjugate of the impedance of the receiver or transmitter. In the case of a transmitter, the desired matching impedance might not correspond to the dynamic output impedance of the transmitter as analyzed as a source impedance but rather the design value (typically 50 ohms) required for efficient and safe operation of the transmitting circuitry. The intended impedance is normally resistive but a transmitter may have additional adjustments to cancel a certain amount of reactance in order to "tweak" the match. When a transmission line is used in between the antenna and the transmitter (or receiver), one generally would like an antenna system whose impedance is resistive and near the characteristic impedance of that transmission line in order to minimize the standing wave ratio (SWR) and the increase in transmission line losses it entails, in addition to supplyinga good match at the transmitter or receiver itself.

2.4. ANTENNA POLARIZATIONS

Antenna Polarization is a very important parameter when choosing and installing an antenna. It helps to have a good grasp of all the aspects of this subject. Most communications systems use either vertical, horizontal or circular polarization. Knowing the difference between polarizations and how to maximize their benefit is very important to the antenna user

2.4.1. LINEAR POLARIZATION

A linear polarized antenna radiates wholly in one plane containing the direction of propagation. In a circular polarized antenna, the plane of polarization rotates in a circle making one complete revolution during one period of the wave. An antenna is

said to be vertically polarized (linear) when its electric field is perpendicular to the Earth's surface.

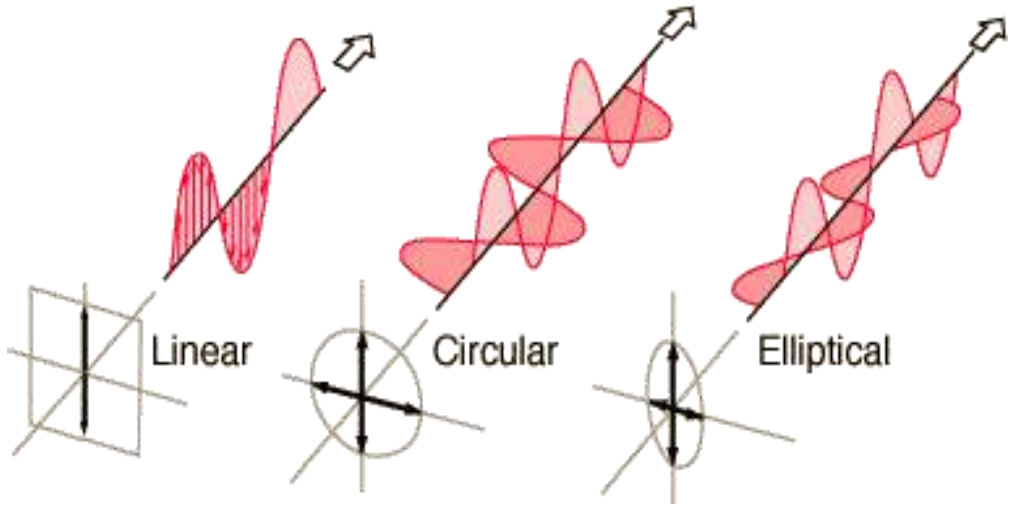

Fig.2.2 Polarizations of an antenna

In a linearly polarized system, a misalignment of polarization of 45 degrees will degrade the signal up to 3 dB and if misaligned 90 degrees the attenuation can be 20 dB or more. Likewise, in a circular polarized system, both antennas must have the same sense. If not, an additional loss of 20 dB or more will be incurred.

There are two types in linear polarization viz horizontal and vertical.

In the horizontal polarization, electric field vector of EM(electro-magnetic) wave is parallel to the earth. This is generated by having antennas horizontal to the earth. The same is explained in the figure by showing electric field in the direction of propagation.

In the vertical polarization, electric field vector of EM(electro-magnetic) wave is perpendicular to the earth. This is generated by having antennas vertical to the earth. The same is explained in the figure by showing electric field in the perpendicular direction of propagation.

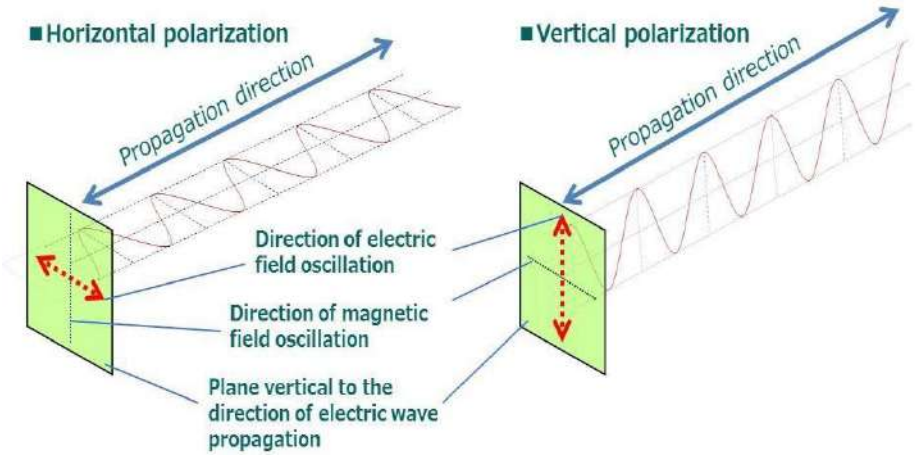

Fig.2.3 Types of linear polarization of an antenna

TYPICAL APPLICATIONS

Vertical polarization is most often used when it is desired to radiate a radio signal in all directions such as widely distributed mobile units.

Horizontal polarization is used to broadcast television in the USA. Also, man made radio noise is predominantly vertically polarized and the use of ho polarization would provide some discrimination against interference from noise.

2.4.2. CIRCULAR POLARIZATION

An antenna has circular polarization if the field vector (electric or magnetic) for the transmitted wave of the antenna has two orthogonal linear components with the same magnitude and the time-phase difference between this is odd multiples of 90 º.

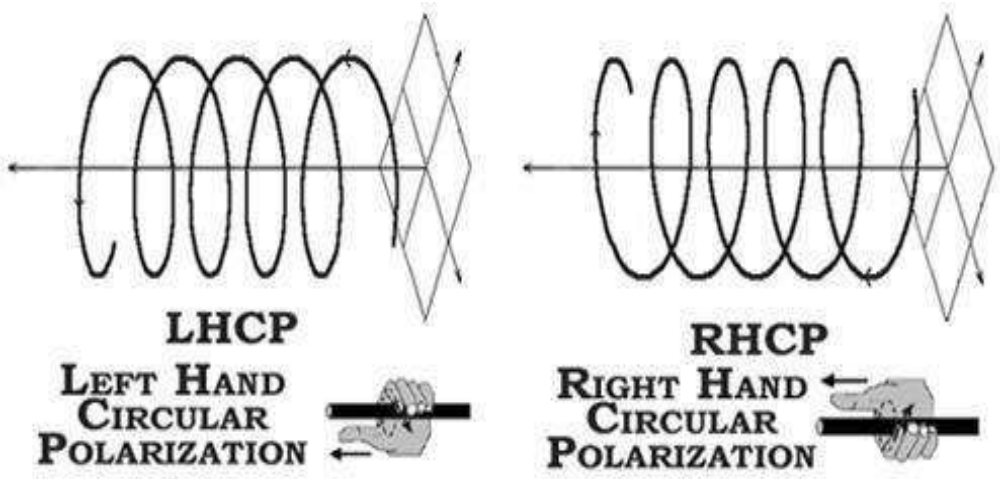

Fig.2.4 Types of circular polarization of an antenna

2.4.3. Techniques for circular polarization

There are many ways to get circular polarization for the patch antennas. Figure 2.3.3 shows some common ways to get left-and right handed circular polarization. They can be divided into two groups, dual feed and single feed patches.

The dual feed patch antennas feeds with equal amplitude but with 90 ^{o} phase difference. The single feed patch antennas using truncated corner, truncated circle, corner feed or slots in the patch.

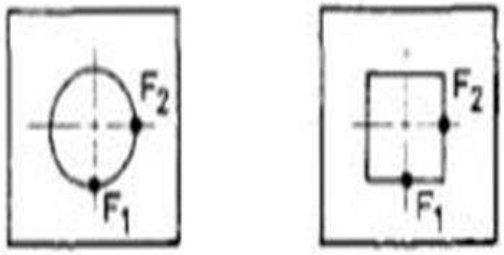

Fig.2.5 Dual feed

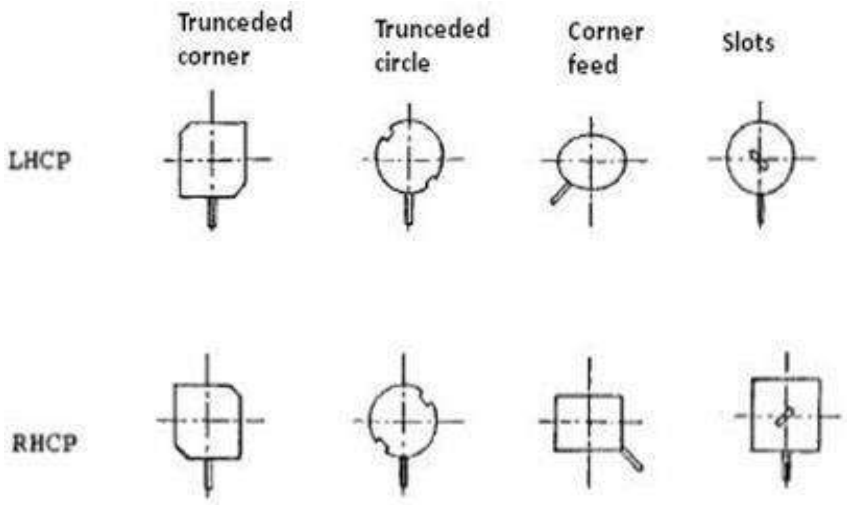

Fig.2.6 Single feed

2.4.4. Benefits

CP antennas are demanding to design, however offer multiple benefits

- Immunity to faraday rotation
- Mitigation of multipath propagation
- Polarization losses due to misalignment

2.4.5. Applications

- Point-to-multipoint communication Omnidirectional CP antennas could provide all the benefits of circular polarization in systems, where a centrally located nod broadcast radio messages to surrounding units.
- In radio frequency identification (RFID) the omnidirectional pattern would minimize the risk of not detecting a tag due to nulls in radiation pattern. The circular polarization would ensure a tag is detected regardless of its orientation. This is especially valuable in security systems, where RFID is employed to prevent carrying objects outside of a certain area.

- For many remote tracking applications the proper antenna orientation cannot be guaranteed at all times. This is because the tracking device (and antenna) is attached to tracked object. If the object is rotated, so will be antenna. Currently all satellite navigation signals are right-hand circularly polarized, therefore omnidirectional CP antenna could overcome this problem.
- Many satellites use spin stabilization as a simple and low cost way to maintain their orbit. This means the spacecraft rotates constantly. To provide satelliteEarth communication (i.e. for telemetry, tracking and command (TT&C)) an omnidirectional pattern is required and circular polarization is employed to mitigate the effect of Faraday rotation in the ionosphere.

2.4.6. Techniques for wider bandwidth

There are many techniques for wider bandwidth. This is few of the most common.

- Thicker substrate
- Bigger antenna, in general. When the antenna is electrically small the bandwidth decrease.
- Lower permittivity

CHAPTER 3 EXISTING SYSTEM

3.1. Microstrip Bandstop Filters :

In the modern era of wireless communications, various technologies are available in RF and microwave/millimeter wave circuits for compactness, low cost and high performance. These techniques are low-temperature co-fired ceramic technology (LTCC) [1], low-temperature co-fired ferrite (LTCF) [1], photonic band gap structures (PBG) or electromagnetic band gap structures (EBG) [2], ground plane aperture (GPA) [3-4],

defected ground structure (DGS), defected microstrip structure (DMS) [5-6], substrate integrated waveguide (SIW) [7] and metamaterials or CSRR structures [8-9]. These new techniques have been applied in the designing of microwave circuits/components such as filters, couplers, antennas , etc. Due to low weight, compact size and low cost, these types of technologies are used in the aircrafts, spacecrafts, satellites and missiles [10]. Some techniques, namely, DGS, DMS, PBG and CSRR are very much popular in size reduction or enhancing the performance of the microwave components in microstrip technology. A lot of research work has been done on the DGS as bandstop filters; and still some scope is there to improve the bandstop characteristics. The DGS technique is playing a key role in reducing the size of the component, suppressing the harmonics and enhancing the bandwidth in designing of various microwave components such as tunable filters [11], power dividers [12], amplifiers [1314] oscillators [frequency doublers [16], directional couplers [17], dual-band filters [1821], UWB bandpass filters [22-27] and tri-band filters [28-29]. Enough literature is available based on DGS techniques for reducing the size of filters [30-33].

In this paper, the bandstop characteristics of various dumbbell-shaped defected ground structure (DB-DGS) are studied with the effect of DB-DGS structures in terms of inductance, capacitance and their sharpness factor. All the different DGS shapes are etchedin the ground plane of 50ö microstrip line. In this paper, conventional dumbbell shaped DGS structures are compared and a new dumbbell-shaped DGS is proposed with metal strip in the connecting slot of DGS. All the structures are simulated in the HFSS EM simulator while keeping the cutoff frequency constant for all structure. The width (W) of the microstrip line is 3.6 mm to achieve 50 Ÿ line impedance. Design goals and specifications are given in the Table.

Advantages & Disadvantages:

Micro strip antennas have many useful advantages compared to other microwave antennas, and therefore many applications cover the broad frequency range from 100 MHz to 100GHz. Some of the advantages and disadvantages of microstrip antennas compared to conventional microwave antennas are:

Advantages:

- Light weight and low volume.
- Low profile planar configuration which can be easily made conformal to host surface.
- Low fabrication cost, readily amenable to mass production.
- Linear and circular polarizations are possible with simple feed.
- Dual frequency and dual polarization antennas can be easily made.
- Can be integrated with microwave integrated circuits.
- Mechanically robust when mounted on a rigid surface.

Disadvantages:

- Narrow bandwidth
- Low gain up to 6dB
- Low efficiency
- These antennas radiate into half space **Applications:**
- Satellite communication, direct broadcast services
- Doppler and other radars
- Missiles and telemetry
- Mobile radio (pagers, telephones, man pack systems) ➢ Biomedical radiators and intruder alarms.

3.2 Design Goals and Specifications

Cutoff frequency	4 GHz
Insertion Loss (S_{21})	< -0.3 dB
Reflection coefficient (S_{11})	< -10 dB
$İ_r$ Neltec NH9332	3.2
Height of the Substrate	1.524 mm
Thickness of the conducting strip	0.07 mm

Loss tangent	0.0024

3.2.1. VARIUOS DESIGN CONFIGURATION OF DB-DGS

Various conventional DB-DGS configurations are shown in Fig.1 with the proposed metal strip loaded DB-DGS. The corresponding geometrical parameters have been computed taking a cutoff frequency of 4 GHz which are listed in Table 2. For all DB-DGS topologies, a 50Ÿ microstrip line is considered with the same width (W = 3.6 mm) and length (L = 19.5 mm) of the conducting strip. In these topologies, Fig. 1 (b) -1 (d) are the variants of Fig. 1 (a), whereas Fig. 1 (f) -Fig.1 (h) are the variants of Fig. 1 (e) and these DB-DGS structures are well reported in [34-36]. Conversely, we haveproposed a modified square transmetal slit DB-DGS bandstop filter at 4 GHz cutoff frequency with enhanced sharpness shown in Fig. 1 (i).

3.2.2. L-C MODELLING OF DB-DGS

The DB-DGS can be modeled in L-C equivalent circuits in parallel combination, also can be seen in [10]. The value of effective inductance (L), effective capacitance (C) and sharpness of the filter can be computed by using formulas [3436]:

$$C \quad \frac{5 f^{c}}{{}_{2} \quad {}_{2} pf} \qquad (1)$$

$$L \frac{250}{{}_{2} nH} \qquad (2)$$
$$C(\mathrm{S} f_{o})$$

$$Sharpnessfactor \quad \frac{f^{c}}{} \qquad (3)$$
$$f_{o}$$

Where f_c is the cutoff frequency and f_o is the resonant frequency. The cutoff frequency and resonant frequency can be extracted from the simulated S-parameter designs.

3.2.3. CHARACTERSITICS OF DB-DGS

Fig.2 shows the simulated S-parameter (S_{21}) of all the DB-DGS structures that are shown in Fig.1. The performance of all the type of DBDGS including proposed transmetal shape DBDGS are shown in Table 3. In all the cases the cutoff frequency is kept constant by the optimization of dimensions of the DB-DGS. The square, circular, triangular and hexagonal DBDGS structures have less sharpness as compared to the transmetal shape structure. The sharpness of filters depends on the effective capacitance which is responsible for enhancing the sharpness of the microstrip filter. In the case of transmetal DB-DGS, the effective capacitance is more as compared to other DB-DGS which can be seen in Table 3. Further, to improve the sharpness of the bandstop filter, the modified square transmetal DB-DGS are proposed as shown in Fig. 1(i). Using this proposed design configuration the highest sharpness factor close to 0.93 is achieved among all the type of DB-DGS structure. The effective inductance, capacitance and sharpness of the proposed microstrip filter can be computed using the formulas given in equations (1) and (2). In the some research papers[34-36], the researchers proposed that if the area of the head in dumbbell shaped DGS is modified, the effective inductance can be controlled which is responsible for the cutoff frequency shifting and if the connecting head slot gap is modified then the effective capacitance can be controlled which is responsible for sharpness or resonance frequency [1]. But there is limitation to modify the slot gap to enhance sharpness, so the transmetalslit is indeed helpful to enhance the effective capacitance or sharpness of the bandstop filter.

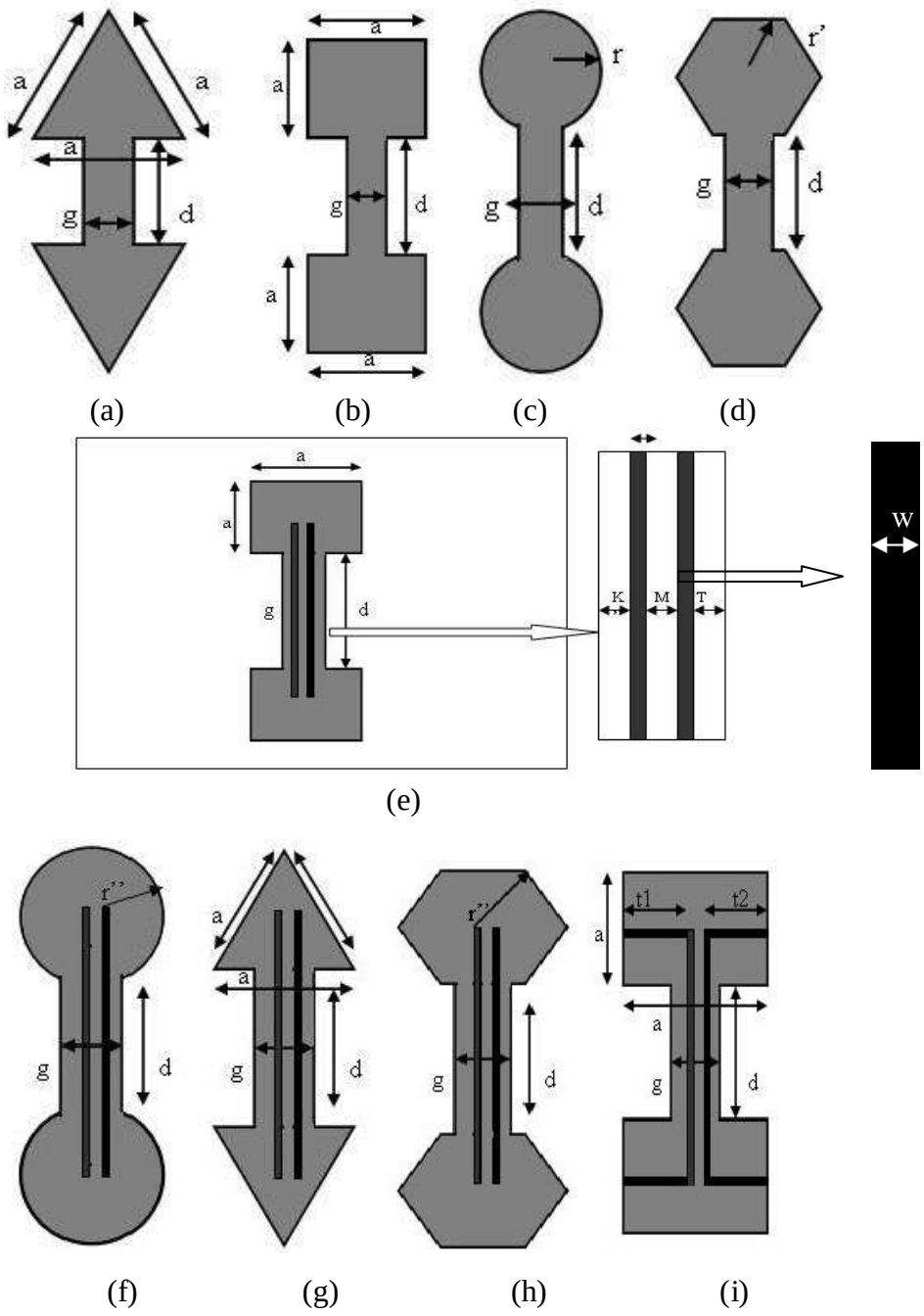

Fig. 1: Design configuration of DB-DGS: (a) Triangular DB-DGS[34,35] (b) Square DB-DGS [34,36] (c) Circular

DB-DGS[36] (d) Hexagonal DB-DGS[36] (e) Square transmetal slit DB-DGS (f) Circular transmetal slit DB-DGS (g) Triangular transmetal slit DB-DGS (h) Hexagonal transmetal slit DB-DGS[36] (i) modified square transmetal slit DB-DGS

3.3. WAVES ON MICROSTRIP:

S.No.	Design configuration of DB-DGS	a(mm)	g (mm)	d (mm)	r / r' / r'' (mm)	K (mm)	M (mm)	T (mm)	w (mm)	t1 (mm)	t2 (mm)
1	Circular	-	0.8	12	3.0	-	-	-	-	-	-
2	Hexagonal	-	1.0	12	3.1	-	-	-	-	-	-
3	Triangular	4	1.1	12	-	-	-	-	-	-	-
4	Square	3.2	0.3	11	-	-	-	-	-	-	-
5	Circular Transmetal	-	1.0	12	2.3	0.1	0.2	0.1	0.3	-	-
6	Hexagonal Transmetal	-	1.0	12	2.3	0.1	0.2	0.1	0.3	-	-
7	Triangular Transmetal	3.6	1.3	12	-	0.3	0.2	0.2	0.3	-	-
8	Square Transmetal	3.5	1.0	11	-	0.05	0.2	0.1	0.3	-	-
9	Modified Square Transmetal	2.8	1.2	11	-	0.2	0.2	0.2	0.3	1.3	1.3

In the Table 3, it has been clearly shown that if the resonant frequency of the filter is near or equal to the cutoff frequency, the sharpness of filter is more. The cutoff frequency depends upon the size of DB-DGS heads due to which inductance varies and resonant frequency depends upon the slot gap due to which the capacitance vary. To enhance the capacitance or to enhance the sharpness. Two the metal slit has been added in the connecting slot of DB-DGS, in result, there is an increment in the capacitance. In Table 3, the cutoff frequency for all design configurations has been kept constant.

3.3.1 Performance table of all DB-DGS structure including transmetal DB-DGS

S.No.	Design configuration of DB-DGS	f_c 3-dB cutoff (GHz)	f_o resonant frequency (GHz)	Inductance (L) in nH	Capacitance (C) in pF	Sharpness factor
1	Circular	4	6	2.211	0.318	0.66
2	Hexagonal	4	5.7	2.02	0.386	0.7
3	Triangular	4	5.6	1.949	0.414	0.71
4	Triangular Transmetal	4	5.5	1.875	0.446	0.72
5	Circular Transmetal	4	5.18	1.607	0.587	0.77
6	Hexagonal Transmetal	4	5	1.433	0.707	0.8
7	Square	4	4.92	1.349	0.776	0.81
8	Square Transmetal	4	4.91	1.338	0.785	0.81
9	Modified Square Transmetal	4	4.3	0.536	2.55	0.93

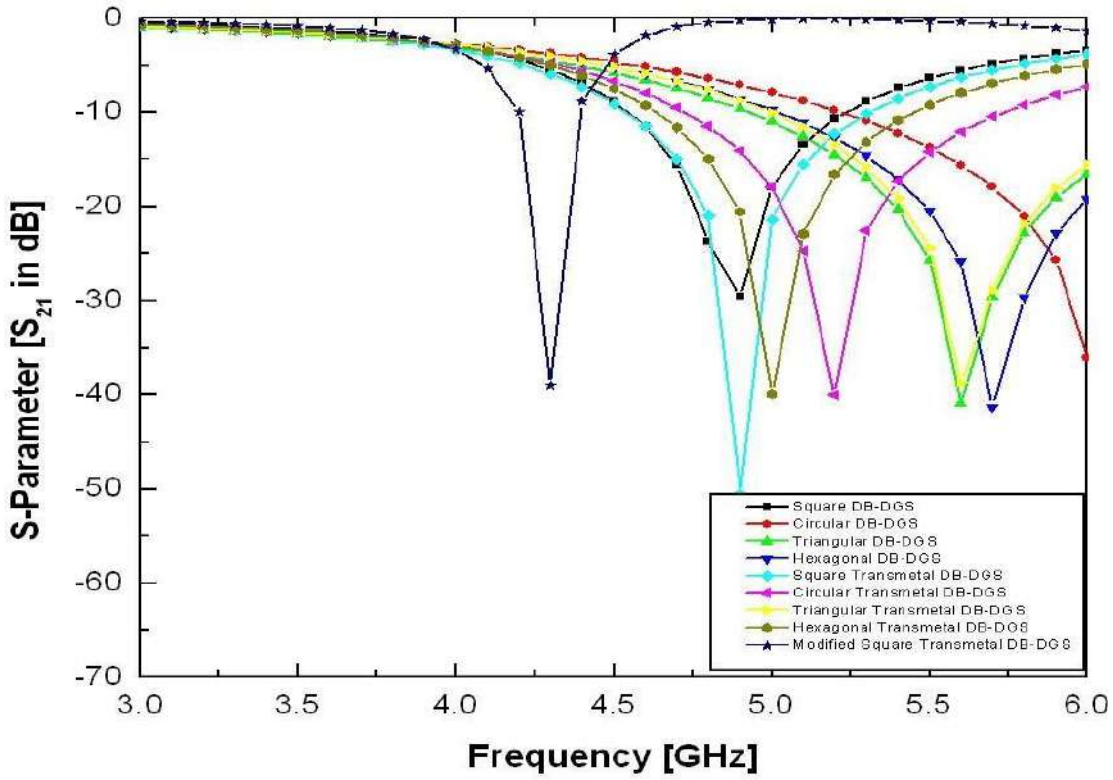

3.4 FABRICATION, MEASUREMENT AND CO-SIMULATION IN ADS

In Fig.3, the modified square transmetal DBDGS has been fabricated to the dimensions which have been shown in Table 2. After the fabrication, the dimensions of the fabricated microstrip filter are: a = 2.9 mm, g = 1.3 mm, M = 0.3 mm, K = 0.3 mm, T = 0.3 mm, w = 0.3 mm, t1 = 1.3 mm, t2 = 1.3 mm. This fabricated filter has been tested in 1127.8500.60 Vector Network Analyzer of Rohde & Schwarz. Fig. 3 (c) shows the simulated as well as measured Sparameter. The resonant frequency and cutoff frequency of both the simulated and measured Sparameters are almost same. The resonant frequency is 4.3 GHz and 3-dB cutoff frequency is 4.0 in the simulation. And the measure resonant frequency is also 4.3 GHz and the 3-dB cutoff is 4.0 GHz. The measured results are almost same as simulated one.

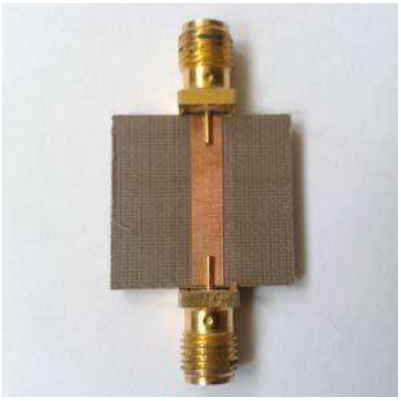

(a)

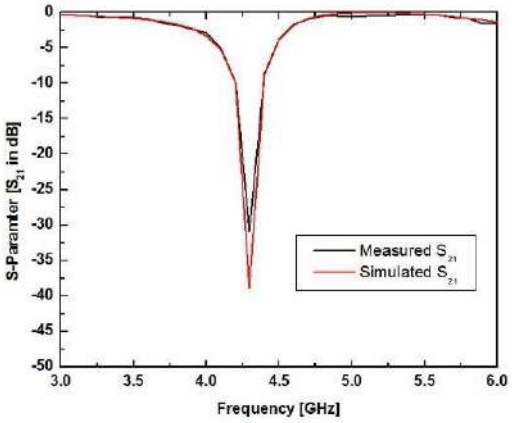

(c)

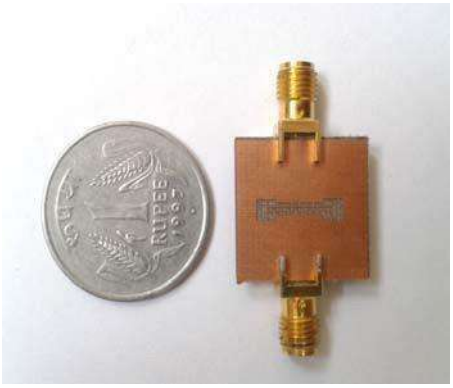

(b)(b)

Fig : Modified square transmetal DB-DGS (a) Top view (b) Bottom view (c) Measured and simulated S-parameter of proposed DB-DGS

For more verification of results, the circuit simulation also has been done as shown in Fig. 4. For the proposed filter can be modeled as LC resonator circuit. The values of these L and C can be extracted by using the formulas given in equations (1) and (2). The extracted value of L and C has been shown in Table 3. These extracted values are used for designing L-C model prototype terminated with 50 ohm source and load as shown in Fig.4. This L-C model is co-simulated in ADS2006A. The simulated results have been shown in Fig.4 (b) which is the good in agreement with simulated results in HFSS V10 in Fig. 2 for the modified square transmetal DB-DGS.

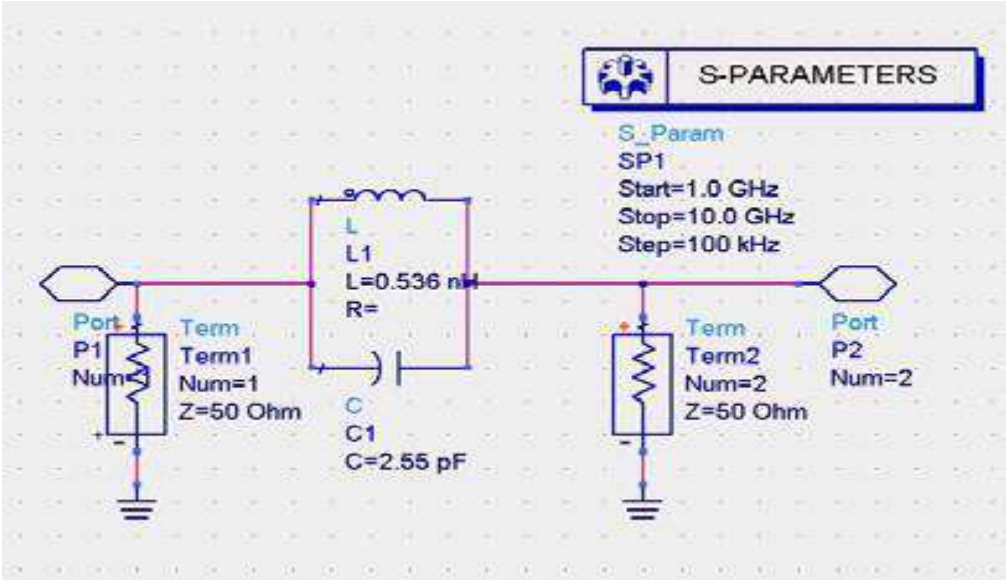

(a)

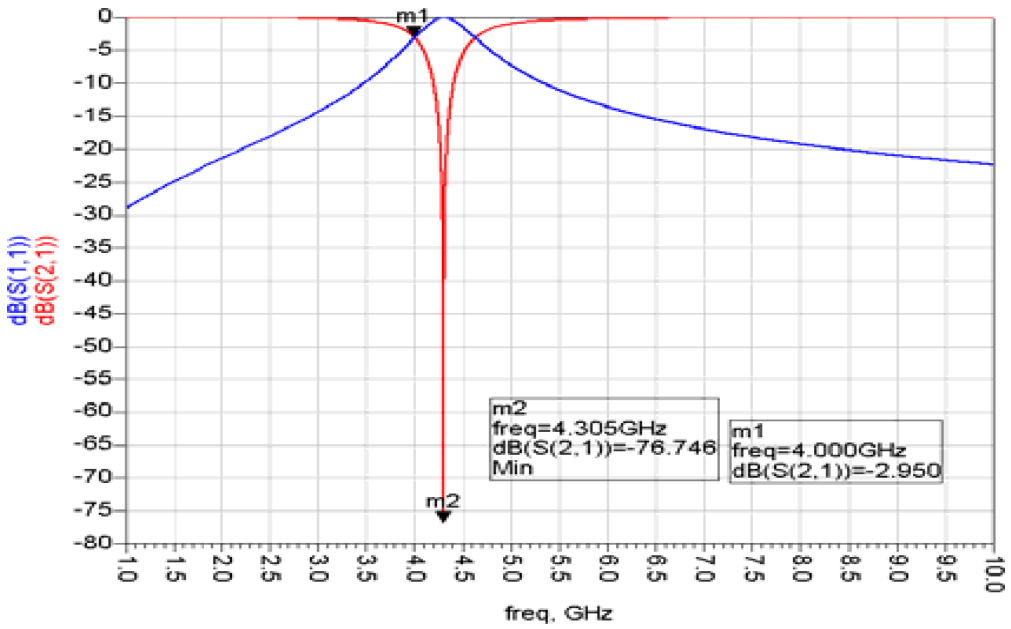

(b)

Fig : (a) L-C equivalent circuit (b) Simulated Sparameters of modified square transmetal DB-DGS

CHAPTER 4 PROPOSED SYSTEM

4.1. ANTENNA DESIGNS :

The geometric structure of the Bandstop filter with its bottom view is shown in figure1 respectively. Microstrip line is fed with 50 ohm impedance. Selection of topology for the designing of filter depends upon several factors like elliptical structure, sort of response, requirement of bandwidth, size and power handling capacity. Microstrip line with ellipse structure provides good pass band and stop band response having higher bandwidth. Use of elliptical patch has caused improvement in antenna characteristics. A compact antenna for multiband wireless communication was presented and the structure consisted of a wired elliptical slot on the substrate. In microstrip line was provided at the other side of the patch. Elliptical slot was placed at the center of the patch.

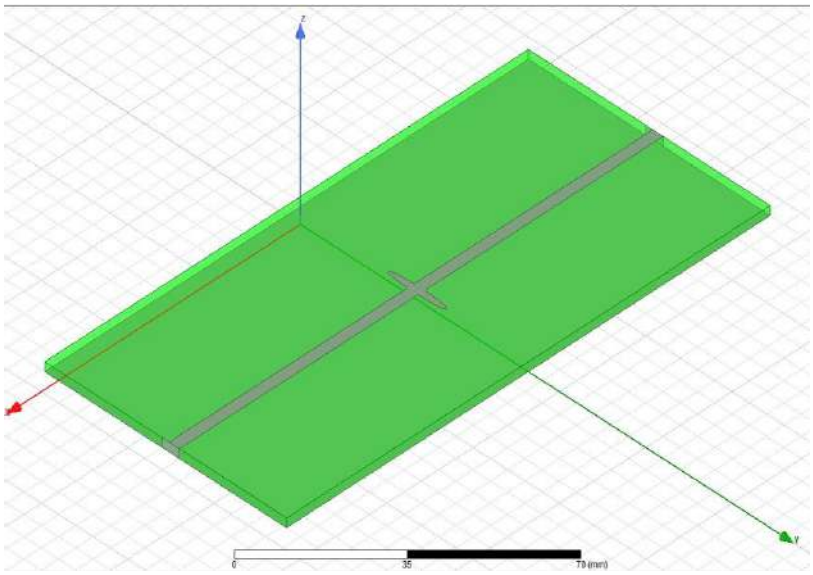

Fig. 4.1 Complete 3D geometry of the propose filter

CHAPTER 5
HFSS SOFTWARE

5.1. INTRODUCTION:

There are different methods developed to analyse microstrip antennas. These methods are broadly generalized into two sections: Analytical and Numerical methods. Analytical methods such as transmission line and cavity methods are based on equivalent magnetic current distribution around the patch edges similar to analysisof slot antennas. Numerical or full-wave methods that are based on electric current distribution on the patch conductor and ground plane similar to analysis of dipole antennas (Kumar, 2003). Transmission line model (TLM) can be only applied for microstrip antennas having rectangular or square geometries. Besides, TLM does not give reliable results especially in high frequencies because desired antenna parameters are derived by several empirical formulas. One of the other methods to analyzemicrostrip antennas is Cavity model developed by Lo. Differently from TLM, this model can be applied for much geometry in addition to rectangular geometries. Although, the results driven from cavity model are more reliable than TLM, the sensitivity is less when the used dielectric thickness is greater relatively to wavelength (Çakır, 2004). In the beginning of 1970s, full wave analysis of microstripantennas were developed as a result of the unreliable results of TLM and cavity models in some conditions. Moreover, the numerical methods are used to analyze anycomplex antenna geometry even if includes irregular shape, finite dielectric or ground plane size and anisotropic dielectric radome etc. The most common numericaltechniques for antenna analysis are method of moments (MoM), finite differencetime domain (FDTD) and finite element method (FEM) (Guha and Antar, 2011). FDTD and MoM are conceptually simpler and easier to program but FEM is more powerful and versatile numerical technique for handling problems involving complex geometries and inhomogeneous media. In addition, systematic generality of the method provides constructing general purpose computer programs to solve widerange of problems and these constructed programs developed for a particular discipline can be easily applied to solve problems in a different field with little or no modification. (Sadiku, 2000).

Today, many commercial and free electromagnetic

simulator programs that are based on different numerical solving techniques have been developed. For instance, FIT based CST Microwave Studio, FFTD based XFDTD, MoM based AWR Axiem and SONNET, and FEM based FEMM. In this thesis, one of the commercial FEM based computer program High Frequency Structure Simulator (HFSS) is used for simulations. FEM method and HFSS program are briefly introduced in the next parts of this chapter.

HFSS is a high-performance full-wave electromagnetic (EM) field simulator for arbitrary 3D volumetric passive device modeling that takes advantage of the familiar Microsoft Windows graphical user interface. It integrates simulation, visualization, solid modeling, and automation in an easy-to-learn environment where solutions to your 3D EM problems are quickly and accurately obtained. Ansoft HFSS employs the Finite Element Method(FEM), adaptive meshing, and brilliant graphics to give you unparalleled performance and insight to all of your 3D EM problems. Ansoft HFSS can beused to calculate parameters such as S-Parameters, Resonant Frequency,and Fields.

HFSS is an interactive simulation system whose basic mesh element is a tetrahedron. This allows you to solve any arbitrary 3D geometry, especially those with complex curves and shapes, in a fraction of the time it would take using other techniques.

The name HFSS stands for High Frequency Structure Simulator. Ansoft pioneered the use of the Finite Element Method(FEM) for EM simulation by developing/implementing technologies such as tangential vector finite elements, adaptive meshing, and Adaptive Lanczos-Pade Sweep(ALPS). Today, HFSScontinues to lead the industry with innovations such as Modes-to-Nodes and FullWave Spice.
Ansoft HFSS has evolved over a period of years with input from many users and industries. In industry, Ansoft HFSS is the tool of choice for high-productivityresearch, development, and virtual prototyping.

HFSS is a high-performance FEM based electromagnetic field simulator for modeling to arbitrary three dimensional volumetric passive devices. Its' standard accuracy, advanced solver and computation technology make it useful and preferable tool for engineers designing high frequency and high speed electronic components.

HFSS integrates simulation, visualization, solid modeling and automation in an easyto learn environment, besides solving three dimensional electromagnetic problems in acceptable solution time and accuracy.

In HFSS, any structure is defined by adaptive meshing to get more accurate results. S parameters, resonant frequencies, radiation patterns and fields can be calculated by the software (User's Guide, 2005). In this thesis, HFSS v13 is used for antenna simulations and numerical results.

5.2. ANSOFT DESKTOP TERMS:

The Ansoft HFSS Desktop has several optional panels

- A **Project Manager** which contains a design tree which lists the structure of the project.
- A **Message Manager** that allows you to view any errors or warnings that occur before you begin a simulation.
- A **Property Window** that displays and allows you to change model parameters or attributes.
- A **Progress Window** that displays solution progress.
- A **3DModelerWindow** containsthe model and model tree for active design.

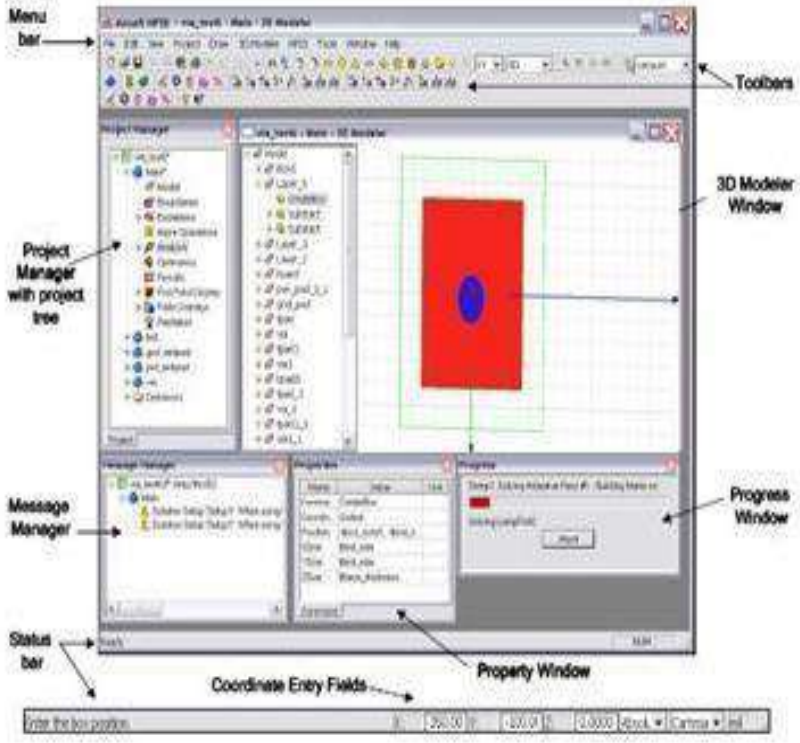

Fig 5.1 HFSS Desktop

5.3. DESIGN FLOW FOR USING HFSS:

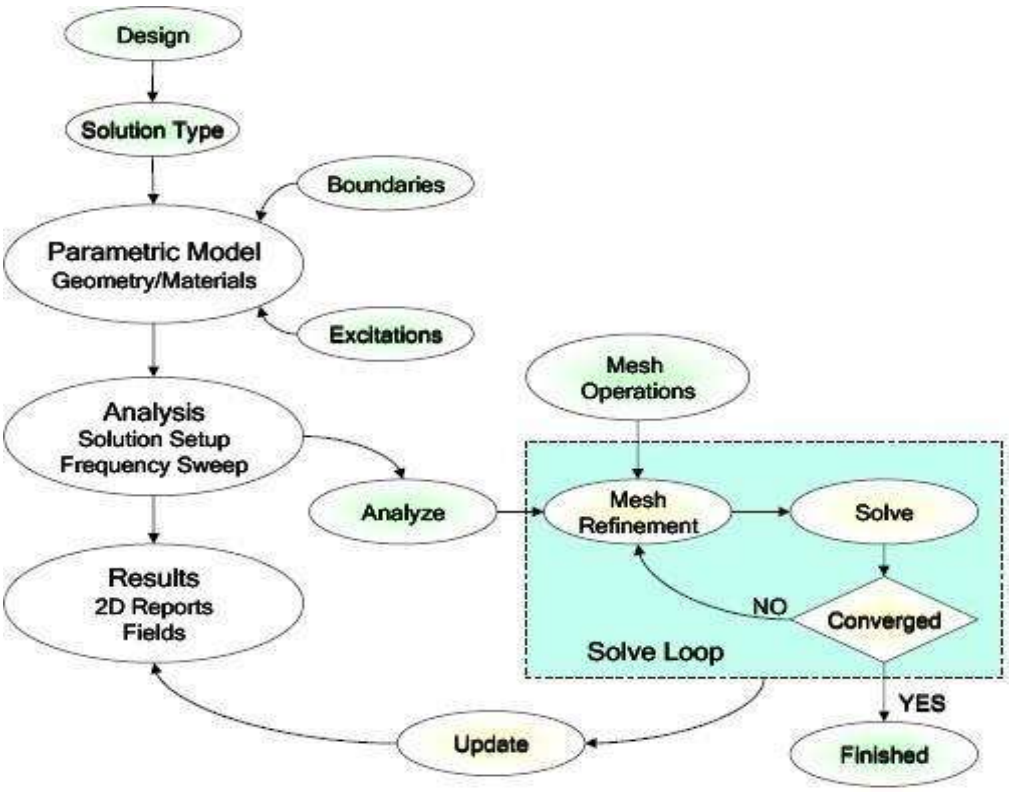

Fig 5.2 Steps in HFSS Design and Analysis

5.4. FINITE ELEMENT METHOD:

The finite element method is a numerical technique that is used for obtaining approximate solutions to boundary-value problems of mathematical physics. It was first proposed by Cournat in 1943 and began to use in the 1950s for structural analysis such as aircraft designs. Since then the method was applied to electromagnetic problems in 1968, it has been employed in diverse areas from electromagnetic radiation and absorption problems to electrical machines and semiconductor applications (Sadiku, 2000), (Jin, 2002). In this method, the structure is represented by an assemblage of sub-regions called finite elements. Nodes are the joints where the considered interconnections of the finite elements. Displacement functions are the simple functions that are chosen in order to approximate of the distribution or variation of the actual displacements over each finite element. Displacements are the unknown magnitudes or amplitudes of the displacement functions at the nodes. Therefore, the method aims to approximate displacements at the nodes as a solution (Desai and Abel, 1972).

To sum up, the solving procedure of the FEM can be generalized in four steps: Discretization of the solution region into a finite number of sub-regions (finite elements), selection of interpolation function, formulation of the system of equations and solution of the system of equations (Jin, 2002). Discretization, the first and perhaps the most important step in any FEM analysis, can be simply described as the process of subdivision of the structure into an equivalent system of finite elements. The typical finite elements which are shown in Figure 4.3 may be triangle, group of triangles, tetrahedra or hexahedra according to the dimension of the structure. Discretization effects the computer storage requirements, the computation time and the accuracy of the numerical results as a pre-processing task. Presently, many well developed FEM based electromagnetic simulators are capable with subdividing of any arbitrary structure (Jin, 2002). In Figure below, discretization process of FEM is presented. In this example, an arbitrary shaped solution region is divided into sub regions by finite elements.

The second step is the selection of an interpolation function or displacement model that provides an approximation of the unknown solution with an element. The

interpolation function can be expressed in various simple forms, such as polynomials and trigonometric functions. Since polynomials offer ease in mathematical manipulations, first (linear), second (quadratic) or higher order polynomials are usually employed in finite element applications. Although employing higher order polynomials improves accuracy, usually it causes more complicated formulation than employing lower order polynomials. Hence, the simple linear interpolation is still widely used. Once the order of the polynomial is selected, an expression for the unknown solution in an element can be derived (Jin, 2002). The third step is formulation of the system of equations and it includes three substeps. Firstly, the elemental equation is generally formulated by using Ritz's or Galerkin's methods. Then, all of the elemental equations are formed the system of equations, a process called assembling. Lastly, the boundary conditions such as Neumann and Dirichlet conditions are imposed to obtain the final form of the system of equations. In computer applications, instead of separating these substeps, they are intertwined. During the assembling process, generation of elemental equation and imposition of boundary conditions are done. (Jin, 2002) The last step is solving of the system of equations.

High Frequency Structure Simulator (HFSS) which is an antenna design simulation tool offers accurate, efficient computational solutions for electromagnetic design and analysis. It is userfriendly3D EM simulation software enables us tochoose the most appropriate method for the design and optimization of devicesoperating in a wide range of frequencies. It is based on Finite Element Method(FEM). FEM has its origin in the field of structural analysis. It is a more powerful and adaptable numerical technique for handling programs involving complex geometries. In mathematics, FEM is a numerical technique for finding approximate solutions to boundary value problems. It uses variation methods (the Calculus of variations) to decrease an error function and produce a steady solution. As we know that joining many tiny straight lines can approximate a larger circle, FEM involves allthe methods for connecting many simple element equations over many small subdomains, named finite elements, to approximate a more complex equation over a larger domain. FEM analysis of any problem involves basically four steps.

- Discrediting the solution region into a finite number of sub-regions or elements.
- Deriving governing equations of the typical element.
- Assembling of all elements in the solution region.
- Solving the system of equations obtained.

Typical steps mentioned above are followed for numerical analysis to analyze and solve any complex structure. To represent any complex geometry, the geometry is sub-divided into many small regions called finite elements and equations are obtained for each finite element. After obtaining all the finite element's equations, they are recombined to get the global system of equations for final calculation of whole complex geometry. The global system of equations has known solution techniques, and can be calculated from the initial values of the original problem to obtain a numerical answer. The global system of equations has known solutiontechniques, and can be calculated from the initial values of the original problem to obtain a numerical answer. The sectoring of a total domain into smaller domains has several advantages:

- Complex geometry is represented exactly
- Different material properties is also included
- Total solution is easily represented
- Internment of local effects

Including these advantages, another advantage of FEM is that it is numerically stable method errors in the input and intermediate calculations do not accumulate, which avoids the resulting output to become meaningless.

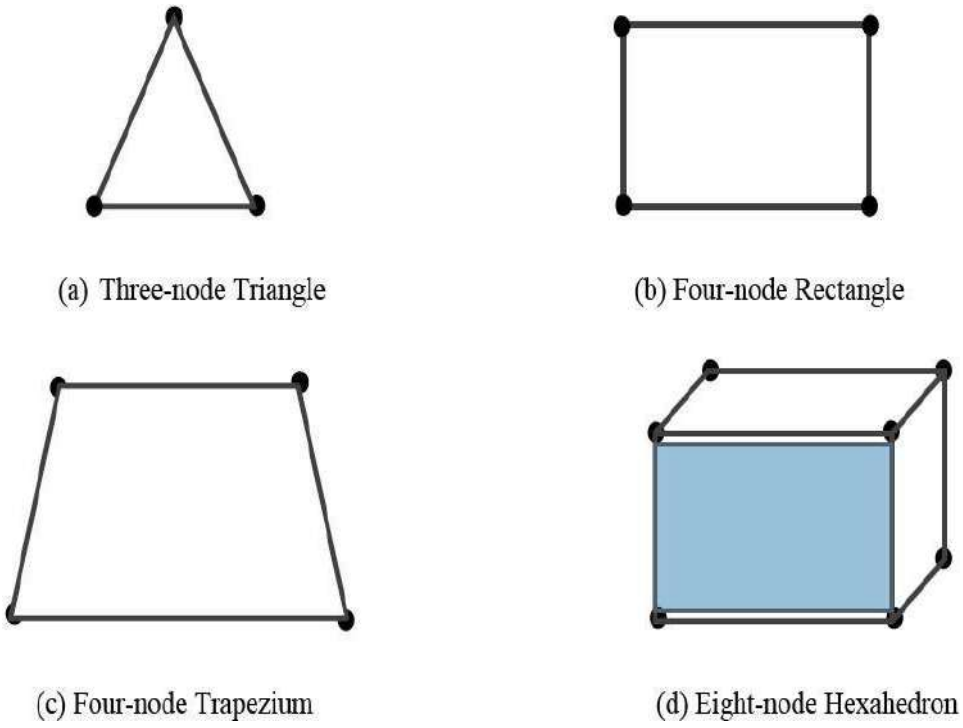

Fig. 5.3 Typical finite elements: (a)-(c) Two-dimensional, (d) Three-dimensional

The different finite elements are represented by different quadrilateral structures, few of them are shown in Fig.5.4.These structures are used to divide solution region into smaller parts having different number of nodes. In practical situations, however, it is preferred, for ease of computation, to have elements of same type throughout the region.

CHAPTER 6 RESULTS

6.1. ANTENNA ANALYSIS:

The return loss of proposed antenna is shown in fig.6.1. The return loss curves of the antenna show the wide bandwidth which covers from the 1.8-2.3GHz with band width. The band width covers the many applications of the frequency bands. The antenna shows maximum return loss between 1.8GHz to 2.3GHz. The dotted curve represents the s21 parameters of the antenna. It is noted that the circular slot of the antenna creates the notch bans frequencies in the proposed antenna. The antenna is excited by the 50ohms SMA connector with wave guide type of feeding. The proposed structures are simulated by using ANSOFT HFSS (High frequency structure simulator). Figure 3 demonstrates the simulated scattering parameters of the proposed design. As shown in figure proposed design produce stop band from the frequency ranges 1.8GHz to the 2.3GHz with relatively 3 dB bandwidth. It provides attenuation quite 30 dB within a stopband also it exhibits good pass band selectivity. Tuning in frequency are often achieved by changing the relative dimension of Microstrip line and ellipse structure.

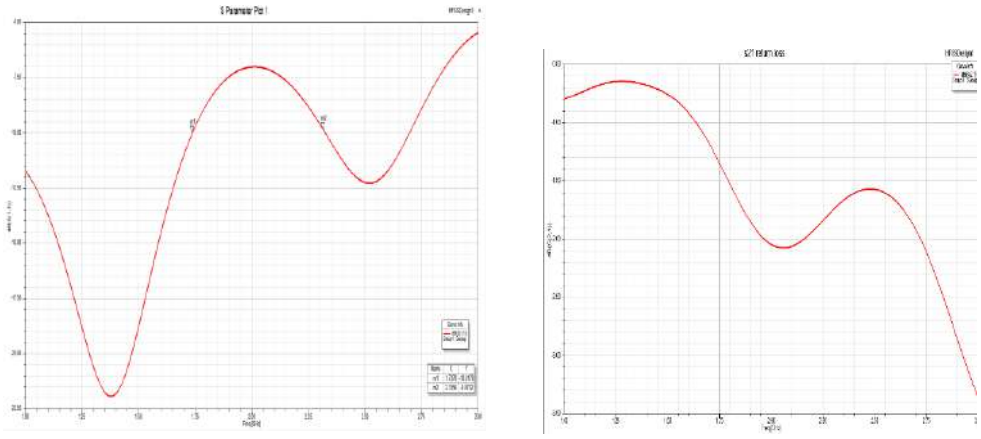

Fig. 6.1 S11 and S21 of proposed antenna a

6.2 Radiation pattern:

The radiation patterns are considered at the two main frequencies between 1.8GHz to 2.3GHz.The proposed antenna represents the good radiation patterns across the frequency range. The main two frequencies are considered because antenna shows the maximum return loss at 1.8GHz to 2.3 GHz. The radiation patterns of the antenna at the frequency 2.3GHz shows the dipole type of the radiation pattern. The plot represents the radiation intensity at the any direction. In plot gives the information of E-plane and H-plane. The solid indicate the E-plane radiation pattern and dotted line indicates the H-plane radiation patterns. At the two resonating frequencies antenna shoes the diploe and slightly like omni directional patterns.

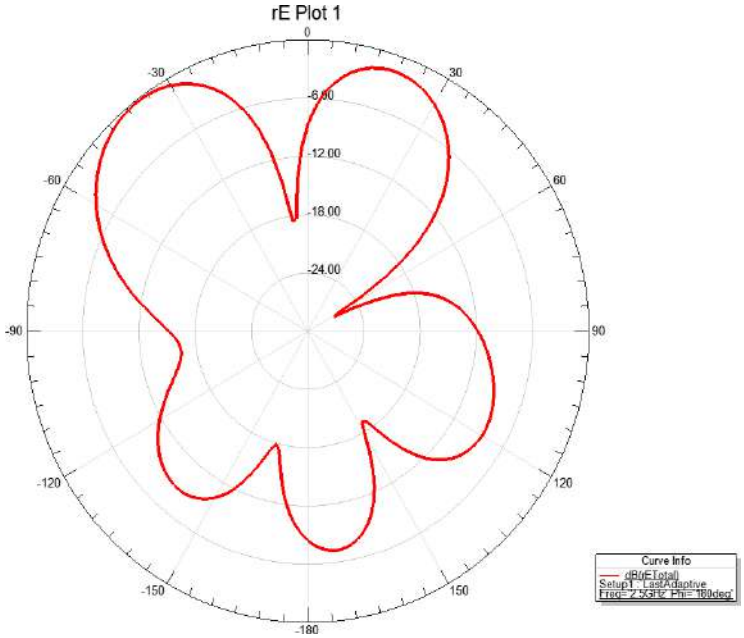

Fig. 6.2 Radiation patterns of proposed antenna

6.3 Gain:

The gain of the antenna at the two frequencies is analyzed the antenna shows the of 2.4dBi at the 4.2GHz and 5.3dBi at the 8.2GHz. The maximum can be seen in the peak gain vs frequency graph. The antenna at the operating frequency from 3.611.0GHz shows the maximum gain at the 8.4GHz. The distribution of lobes indicates the maximum distribution of the gain in that direction. Fig.6 represents the gain of the proposed antenna at the resonating frequencies. The peak gain vs

frequency represents the maximum gain of the proposed antenna at the operating frequency range. The maximum peak gain is observed at 8.2GHz with 5.4dBi. there is an increase of the graph and shows the positive gain along the band.

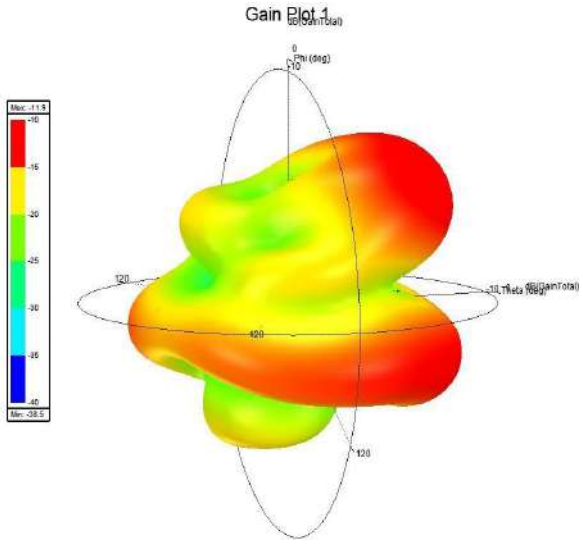

Fig. 6.3 Gain of proposed antenna

6.4 Electric Field Distribution

Electric fields ssatisfy the superposition principle, because Maxwell's equations are linear. As a result, if and are the electric fields resulting from distribution of charges will create an electric field. ; for instance, coulomb's law is linear in charge density as well. At the ends the current must always be zero because there is no place for the charge carriers to flow. The maximum current must happen in the middle because the electrons going from one end of the dipole to the other must flow through the center to get from one side to the other. Current distribution in antenna depend upon type of antenna. For example in a half wavelength dipole and microstrip antenna, current has maximum value at center while current is zero at the edge. The feed point on a resonant center fed half wave dipole occurs at the point of minimum voltage and maximum current, which enables the most efficient power transfer from the transmitter.

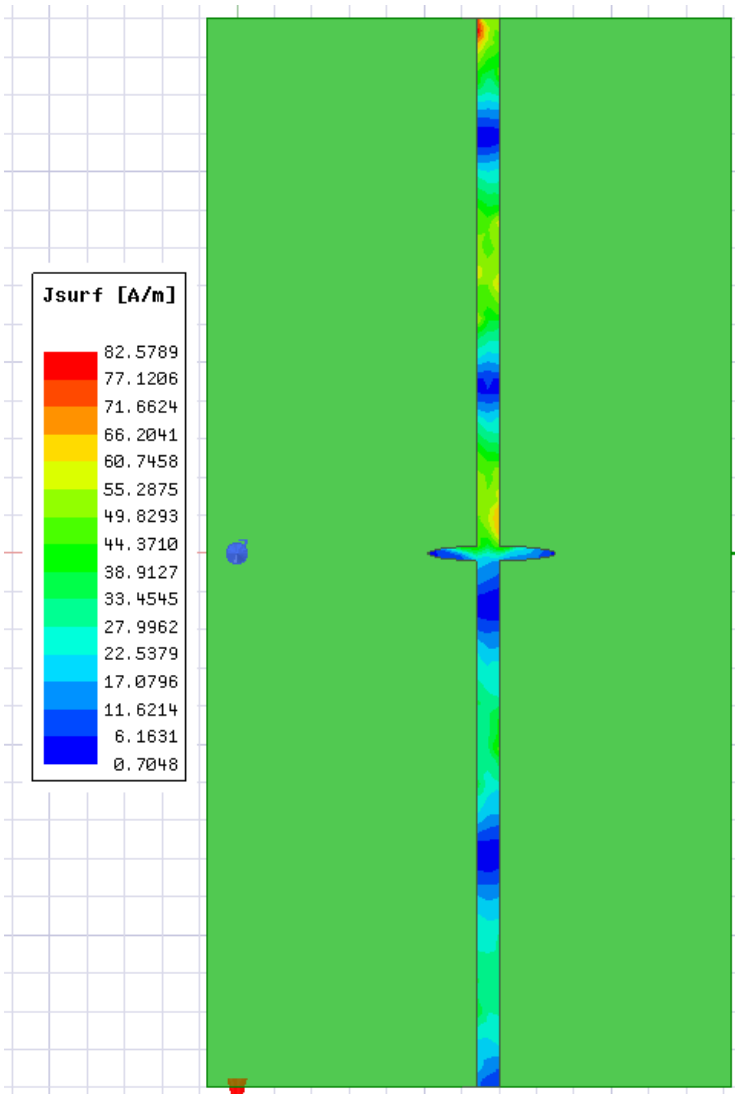

Fig.6.4 Electric field distribution

Antenna is a conducting object having free electrons. When it is fed oscillating electric current, electrons move back and forth inside the antenna. That is, they are accelerating inside the antenna and that produces radiating electromagnetic field. The type of the radiation depends on the shape of the antenna.

CHAPTER 7 CONCLUSION AND FUTURE SCOPE

7.1. Conclusion:

In this paper we present the microstrip bandstop filter with the utilization of elliptical structure. We observed the simulated parameter of the filter and also tuning of frequency has been carried by changing the dimension of ellipse. The planning bandstop filter exhibits high selectivity and good stopband performance and also it consumes less area. Every technology has good aspect also as well asbad aspect the important thing is, how we are using it.Cell phone jammers are very useful to the society from the anti-social elements. We will restrict the communication network between the anti-social elements by using the telephone jammers. Operating or maybe owning a teleohone jammer is illigal in most countries. But it's overall performance is better and helpful in our life.

7.2. Future scope:

- This project will be using very useful in upcoming days as it will improve Signal jamming.
- While the law clearly prohibits using a device to actively disrupt a cell-phone signal, there are no rules against passive cell phone blocking.
- Companies are working on devices that control a cell phone but do not jam the signal.
- The mobile jammer device software are phone would be disruptive has increasedhence, it becomes imperative to study the effect of antenna radiation on the human body.becoming civilian products rather than electronic devices,since with the increasing number of the mobile phone users the need to disable mobile phones in specific places where the ringing of cell

- This devices can be used in practically any location, but are found primarly in places where a phone call would be particularly disruptive because silence is expected .

- Similarly, in recent years, some large enterprises also began to purchase such products. The main function is to prevent employees from being lazy.

CHAPTER 8 REFERENCES

[1] Chow-Yen-Desmond Sim, Ming-Hsuan Chang, andBo-Yu Chen "Microstrip-Fed Ring Slot Antenna Design With Wideband Harmonic Suppression" IEEE TRANSACTIONS ON ANTENNAS AND PROPAGATION, VOL. 62, NO. 9, SEPTEMBER 2014.

[2] K. Chang, R. York, P. Hall, and T. Itoh, "Active integrated antennas,"IEEE Trans. Microw. Theory Tech., vol. 50, no. 3, pp. 937–944, Mar.2002.

[3] D. Segovia-Vargas, D. Castro-Galán, L. E. Garc´ıa-Muñoz, and V González-Posadas, "Broadband active receiving patch with resistive equalization," IEEE Trans. Microw. Theory. Tech., vol. 56, no. 1, pp.56–64, Jan. 2008.

[4] V. Radisic, Y. Qian, and T. Itoh, "Novel architectures for highefficiencyamplifiers for wireless applications," IEEE Trans. MicrowTheory Tech., vol. 46, no. 11, pp. 1901–1909, Nov. 1998.

[5] F. R. Hsiao, T. W. Chiou, and K. L. Wong, "Harmonic control of asquaremicrostrip antenna operated at the 1.8 GHz band," in Proc. Microw.Conf. Asia-Pacific, Aug. 2001, pp. 1052–1055.

[6] V. Radisic, S. T. Chew, Y. Qian, and T. Itoh, "High efficiency poweramplifier integrated with antenna," IEEE Microw. Guided Wave Lett.,vol. 7, no. 2, pp. 39–41, Feb. 1997.

[7] Y. Horii and M. Tsutsumi, "Harmonic control by photonic bandgaponmicrostrip patch antenna," IEEE Microw. Guided Wave Lett., vol. 9,no. 1, pp. 13–48, Jan. 1999.

[8] D. H. Choi, Y. J. Cho, and S. O. Park, “A broadband slot antenna withharmonic suppression,” Microw. Opt. Technol. Lett., vol. 48, no. 10,pp. 1984–1987, Oct. 2006.

[9] K. L. Wong, C. C. Huang, and W. S. Chen, “Printed ring slot antennafor circular polarization,” IEEE Trans. Antennas Propag., vol. 50, no.1, pp. 75– 77, Jan. 2002. s

MRP JAMMER B.O

Dola Sanjay S [1], B. Bhavani[2], B. Manisha[3],B. Ramya Tejaswi[4], A. Sai Puneeth[5]
[1]Principal, Department of Electronics and Communication Engineering, Ramachandra College of Engineering, Eluru, Andhra Pradesh, India.
[2,3,4,5]B. Tech Student, Department of Electronics and Communication Engineering, Ramachandra College of Engineering, Eluru,
Andhra Pradesh, India.
dicedola@gmail.com, bhavaniboddu18@gmail.com, manishabathina999@gmail.com, bondaramya4@gmail.com, saipuneeth0604@gmail.com

ABSTRACT:

This Paper presents a planar Microstrip Bandstopfilter with the utilization of ellipse structure.The bandstopfilter has been designed with the use of step impedancemicrostrip line on the highest of substrate.It producesstopband from the frequency range of 1.8GHZ to2.3GHZ with the stop band attenuation quite 30dB. Itprovides relative 3dB bandwidth response.Thetuning of frequency has been administered with the change indimension of ellipse. A simulation has beenperformed on ANSYS High frequency structure simulator(HFSS) and therefore the design has beenverified with ANSYS Software.

Keywords-components:
Attenuation, Bandstop filter,Ellipse structure, Microstrip line, Patch.

I. INTRODUCTION:

Band Stop filter is an important component in microwave and wireless communication for the utilization of harmonic suppression, mutual coupling reduction and for the suppression of spurious and leakage transmission. So it's essential that the filter provides high performance, compact size and low cost with high attenuation with in the stop band. Microstrip line with ellipse structure provides good pass band and stop band response having higher bandwidth. The entire pattern of the structure is deposited on one substsrate with conductive ground within rock bottom plane so fabrication cost is additionally reduce. In first structure on the very best of the substrate Step impedance kind of line is employed with a standard rectangular shape. The structures are simulated in HFSS simulator and scattering parameters are observed. This paper is split into 6 sections. The primary section comprises of introduction andtheory is described in section II. Discussion of simulation result has been shown in section III and conclusion is drawn in section IV. In modern communication system a broad band micro strip patch antennas have many attractive features like low radiation loss, less dispersion, easy integration for monolithic integrated circuits, so these sorts of antennas have recently become more and more attractive. During this paper, the proposed antenna.

II. THEORY

We have investigated unique design of microstrip patch antenna with elliptical structure. The geometry of the ellipse is chosen such its major radius equals to1mm. The designed antenna has been simulated using HFSS software.With increasing in demand and requirement of wireless communication smaller and low profile antenna has enforced microstrip patch antenna to face infront row. For the proposed structure the consideration for choice of various parameter is same as those for rectangular patch antenna. The substrate chooses has low dielectric constant for top radiation efficiency and thicker substrate increases the impedance bandwidth. The essential antenna structure comprises thin, conducting ellipse shape geometry on adielectric backed by a ground plane.

III. ANTENNA DESIGN

The geometric structure of the Bandstop filter with its bottom view is shown in figure1 respectively. Microstrip line is fed with 50 ohm impedance. Selection of topology for the designing

of filter depends upon several factors like elliptical structure, sort of response, requirement of bandwidth, size and power handling capacity. Microstrip line with ellipse structure provides good pass band and stop band response having higher bandwidth. Use of elliptical patch has caused improvement in antenna characteristics. A compact antenna for multiband wireless communication was presented and the structure consisted of a wired elliptical slot on the substrate. In microstrip line was provided at the other side of the patch. Elliptical slot was placed at the center of the patch. Performance of microwave system may be degraded since the interference may be exist due to the presence of signals from other existing wireless communication systems. Currently, the major rejecting band limited signals from 1.8 GHz to 2.3 GHz. A band stop filter is a filter that passes most frequencies unaltered, but attenuates those in a specific range to very low levels. It is the opposite of a band pass filter.

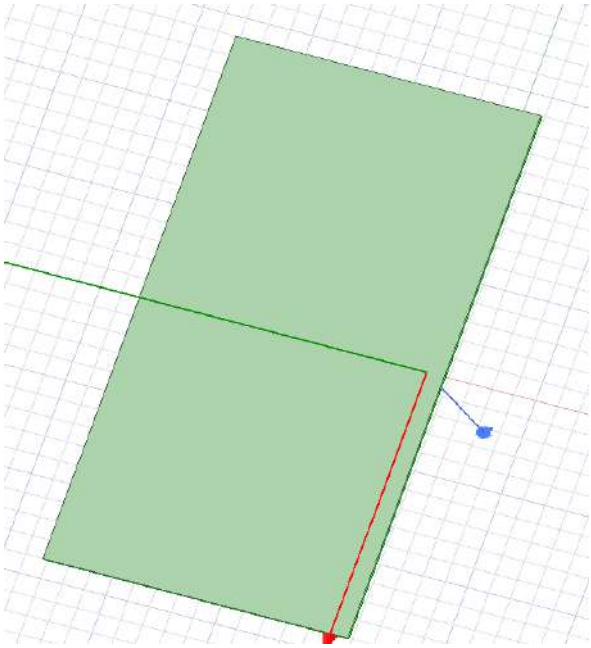

Fig1: Bottom view of the structure

The design structure of the general antenna is shown in fig:2.We chose FR_4 EPOXY as a substrate material.

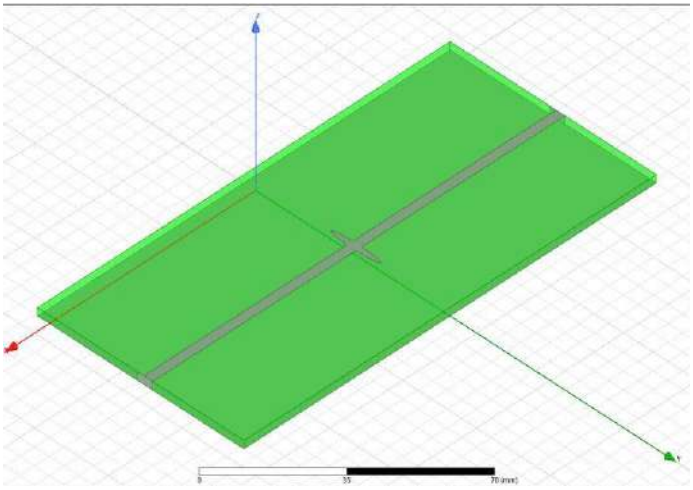

fig.2: Complete 3D geometry of the propose filter

IV. SIMULATION RESULTS AND ANALYSIS

The proposed structures are simulated by using ANSOFT HFSS (High frequency structure simulator). Figure 3 demonstrates the simulated scattering parameters of the proposed design. As shown in figure proposed design produce stop band from the frequency ranges 1.8GHz to the 2.3GHz with relatively 3 dB bandwidth. It provides attenuation quite 30 dB within a stopband also it exhibits good pass band selectivity. Tuning in frequency are often achieved by changing the relative dimension of Microstrip line and ellipse structure.

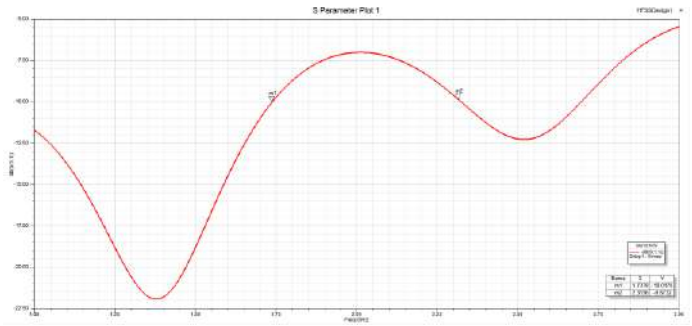

Fig 3: Simulate s parameter structure

VSWR stands for voltage standing wave Ratio, and is additionally mentioned as standing wave Ratio (SWR). VSWR may be a function of the reflection coefficient, which describes the power reflected from the antenna.

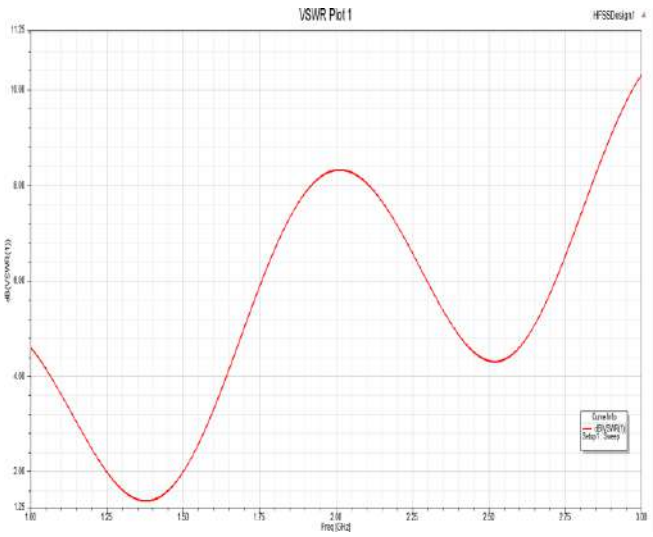

Fig 4: VSWR curve for proposed filter

A radiation diagram defines the variation of the facility radiated by an antenna as a function the direction faraway from the antenna. The 3-dimensional radiation diagram in figure 5, plotted in decibles(dB). A radiation pattern defines thevariation of the power radiated by an antenna as a function of the direction away from the antenna. This power variation as a function of the arrival angle is observe in the antenna's far field.

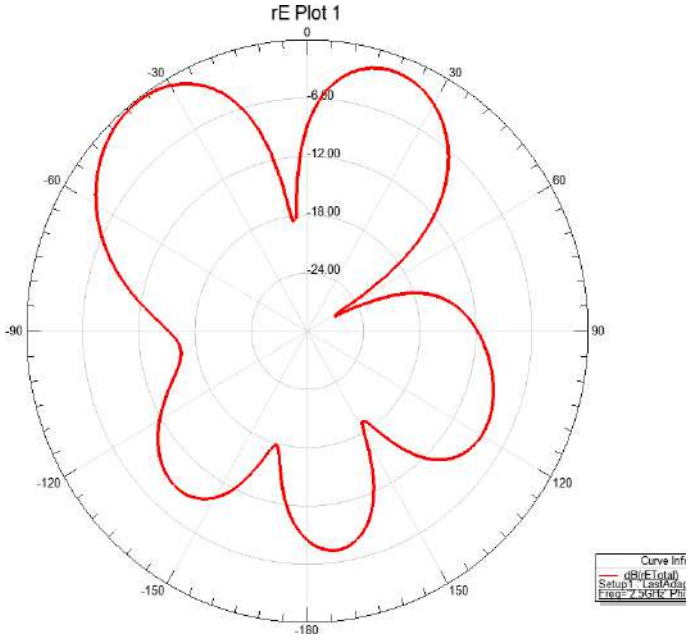

Fig 5: Radiation pattern for proposed filter

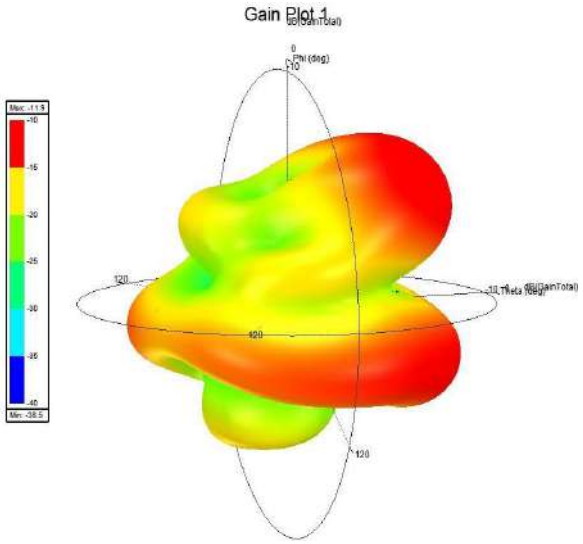

Fig 6: 3D gain plot for proposed filter

Theoretically, patches are having high magnitude within the edges and maximum current distribution on the patch at resonant frequency. The distribution strongly depends on height of the substrate which is presented for antenna size.

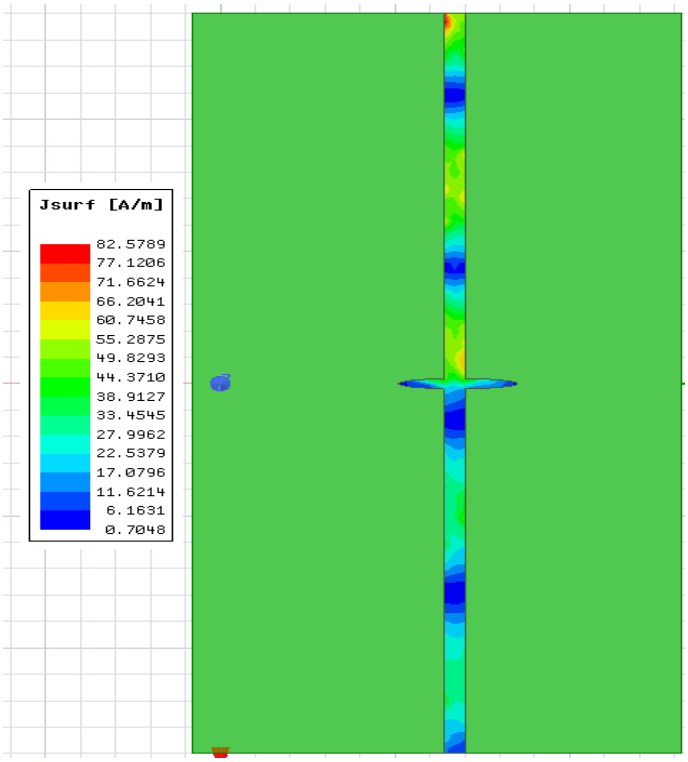

Fig 7: Current distribution in structure

V. CONCLUSION

In this paper we present the microstrip bandstop filter with the utilization of elliptical structure. We observedthe simulated parameter of the filter and also tuning of frequency has been carried by changing the dimension of ellipse. The planning bandstop filter exhibits high selectivity and good stopband performance and also it consumes less area. Every technology has good aspect also as well as bad aspect the important thing is, how we are using it.Cell phone jammers are very useful to the society from the anti-social elements. We will restrict the communication network between the anti-social elements by using the telephone jammers. Operating or maybe owning a teleohone jammer is illigal in most countries. But it's overall performance is better and helpful in our life.

VI. ACKNOWLEDGEMENT

Extending our grateful thanks because of the Authorities of the Ramachandra College of Engineering for providing excellent facilities within the department and timely encouraging to write down this paper.

VII. REFERENCES

[1] *L. H. Weng, Y. C. Guo, X. W. Shi, and X. Q. Chen, An Overview on defected ground structure. Progress In Electromagnetic Research B, Vol. 7, 173–189, 2008*

[2] *M. Kulkarni, Microwave and Radar Engineering , 2nd edition, Umesh publication*

[3] *SAMUEL Y.LIAO, Microwave devices and circuits, Third edition, Prentice hall, Englewood Cliffs, New Jersey 07632*

[4] *Tamasi Moyra, Modeling of bandpass filter using defected ground structure and defected microstrip structure, J Comput Electron (2013) 12:287–296 V. Radisic, Y. Qian, R. Coccioli, and T Itoh, "Novel 2-D photonic bandgap structure of microstrip lines," IEEE Microwave Guide Wave Lett, Vol 8, pp. 69-71, Feb. 1998.*

[5] *Maryam Jaldi and Majid Tayarani,Characteristics of a Novel SlowWave Defected Ground Structure for Planar Wideband Filters, 2011*
International Conference on Information and Electronics Engineering IPCSIT vol.6 (2011) © (2011) IACSIT Press, Singapore

The Micro controller willsend the command to the GSM module. The

[6] *Susanta Kumar PARUI, Santanu DAS, A New Defected Ground Structure for Different Microstrip Circuit Applications, RADIOENGINEERING, VOL. 16, NO. 1, APRIL 2007*

[7] *Q. Chen , & J. Xu ,A Microstrip Bandpass Filter Based On Novel Resonators, Journal of Electromagnetic Waves and Applications , Vol. 26, 1138–1147, 2012*

[8] *Abhishek Anand ,Ashish Bansal, K Shambavi, Zachariah C Alex, Design and Analysis of Microstrip line with Novel Defected Ground Structure , "International Conference on Advanced Nanomaterials &*
Emerging Engineerzng Technologies" (ICANMEET-20J3), NewDelhi, India, 241h _26Ih, July, 2013

[9] *F. W. Grover, Inductance Calculation Working Formulas and Tables. New York: Dover, 1946*

[10] *Chandra Shekhar, Gautam, Avanish Bhadauria,2D Defected Ground Structures in Microstrip Line, 5th international conference on computer*
and devices for communication,2012

[11] *G.L. Matthaei, L. Young and E.M.T. Jones, Microwave Filters, Impedance-Matching Networks and Coupling Structures, 1st ed., Artech House, Massachusetts, 1980.*

[12] *Jia-Sheng Hong, M. J. Lancaster , Microstrip Filters for RF/Microwave Applications, John Wiley & Sons, ISBN 0-471-22161-9 V. Radisic, Y. Qian, R. Coccioli, and T Itoh, "Novel 2-D photonic bandgap structure of microstrip lines," IEEE Microwave Guide Wave Lett, Vol 8, pp. 69-71, Feb. 1998.*

[13] *Maryam Jaldi and Majid Tayarani,Characteristics of aNovel SlowWave Defected Ground Structure for Planar Wideband Filters, 2011*
International Conference on Information and Electronics Engineering IPCSIT vol.6 (2011) © (2011) IACSIT Press, Singapore

[14] *Susanta Kumar PARUI, Santanu DAS, A New Defected Ground Structure for Different Microstrip Circuit Applications, RADIOENGINEERING, VOL. 16, NO. 1, APRIL 2007*

[15] *Q. Chen , & J. Xu ,A Microstrip Bandpass Filter Based On Novel Resonators, Journal of Electromagnetic Waves and Applications , Vol. 26, 1138–1147, 2012*

[16] *Abhishek Anand ,Ashish Bansal, K Shambavi, Zachariah C Alex, Design and Analysis of Microstrip line with Novel Defected Ground Structure , "International Conference on Advanced Nanomaterials &*
Emerging Engineerzng Technologies" (ICANMEET-20J3), NewDelhi, India, 241h _26Ih, July, 2013

[17] *F. W. Grover, Inductance Calculation Working Formulas and Tables. New York: Dover, 1946*

[18] *Chandra Shekhar, Gautam, Avanish Bhadauria,2D Defected Ground Structures in Microstrip Line, 5th international conference on computer*
and devices for communication,2012

[19] *G.L. Matthaei, L. Young and E.M.T. Jones, Microwave Filters, Impedance-Matching Networks and Coupling Structures, 1st ed., Artech House, Massachusetts, 1980.*

[20] *Jia-Sheng Hong, M. J. Lancaster , Microstrip Filters for RF/Microwave*
Applications, John Wiley & Sons, ISBN 0-471-22161-9

GSM module will send the message about the employee who has facing the health issue, to

the appropriate personwho's numbers were given in the commands.

Stage4:
GSM Module will send the message to thegiven numbers.

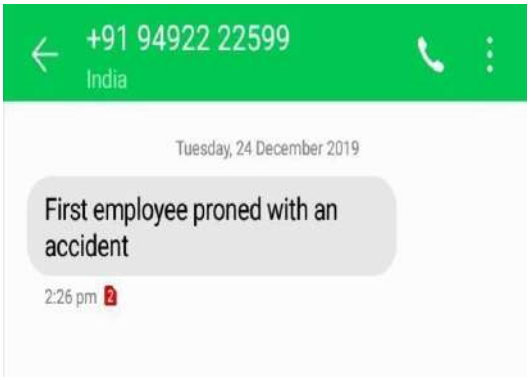

1.3.2.Name and Average percentage of courses that include experiential learning through project work/field work/internship during last five years

Sample Project CSE

Accademic Year 2019-2020

Name of the Project: MEDICAL DIAGNOSIS SYSTEM

SL NO	COURSE NO	COURSE NAME	PAGE MAPPING
1	1	Computer Programming	17,18,40-44
2	2	Object Oriented Programming	17,18, 40-44
3	3	Java Programming	17,18, 40-44
4	4	Database Management Systems	48,49
5	5	Object Oriented Analysis and Design using UML	25-27,29-38
6	6	Unified Modeling Lab	25-27,29-38
7	7	Database Management System Lab	48,49
8	8	Java Programming Lab	17,18, 40-44
9	9	Design and Analysis of Algorithms	40-44
10	10	Software Testing Methodologies	25-27,29-38
11	11	Software Testing Lab	25-27,29-38
12	12	Software Architecture & Design Patterns	25-27,29-38
13	13	Web Technologies	17,18
14	14	Software Architecture& Design Patterns Lab	25-27,29-38
15	15	Web Technologies Lab	17,18
16	16	Software Project Management	25-27,29-38
17	17	Software Engineering	25-27,29-38
18	18	Scripting Languages	25-27,29-38

1 Total Number of Domain subjects : 31

2 Number of Subjects that include experiential learning through project work : 18

3 Average: 58%

HOD-CSE Principal

SAMPLE PROJECT

MEDICAL DIAGNOSIS SYSTEM

The Project work submitted to Jawaharlal Nehru Technological University, Kakinada in partial fulfillment of the requirements for the award of the Degree of

BACHELOR OF TECHNOLOGY

In

COMPUTER SCIENCE AND ENGINEERING

By

P.Ramya
15ME1A0589

N.V.S.Snigdha
15ME1A0587

M.Sahithi
15ME1A0570

T.Kamlish
15ME1A05A8

Under the guidance of

MR.K.Gopi

Asst.Professor

R A M A C H A N D R A
COLLEGE OF ENGINEERING

(An ISO 9001:2008 Certified Institution)

Approved by AICTE, New Delhi; Affiliated by JNTU, Kakinada

NH-5, Near By Pass, Vatluru(V), Eluru-534007, W.G. Dist

2015 – 2019

RAMACHANDRA

COLLEGE OF ENGINEERING

(Approved by A.I.C.T.E New Delhi and Affiliated to JNTUK, KAKINADA)

Vatluru, Eluru, A.P.

DEPARTMENT OF COMPUTER SCIENCE & ENGINEERING

CERTIFICATE

This is to certify that **P.Ramya(15ME1A0589), N.V.S.Snigdha(15ME1A0587), M.Sahithi(15ME1A0570), T.Kamlish(15ME1A05A8)** students of Bachelor of Technology in Computer Science & Engineering have successfully completed their project work entitled "**Medical Diagnosis System**" at Ramachandra College of Engineering, Eluru during the Academic Year 2018-2019. This document is submitted in partial fulfillment for the award of the Degree of Bachelor of Technology in Computer Science & Engineering and the same is not submitted elsewhere.

Mr.K.Gopi
Asst. Professor
Project Guide

Dr G Srinivasa Rao
Professor & HOD

External Examiner

DECLARATION

We are, ***P.Ramya(15ME1A0589),N.V.S.Snigdha(15ME1A0587),M.Sahithi (15ME1A0570),*** **T.Kamlish (15ME1A05A8),** hereby declare the project report titled **"Medical Diagnosis System"** under the supervision of Mr.K.Gopi,Asst.Professor Department of Computer Science and Engineering is submitted in partial fulfillment of the requirements for the award of the degree of Bachelor of Technology in Computer Science and Engineering.This is a record of work carried out by us and the results embodied in this project have not been reproduced or copied from any source. The results embodied in this project report have not been submitted to any other University or Institute for the award of any other degree or diploma.

P.Ramya	**N.V.S.Snigdha**	**M.Sahithi**	**T.Kamlish**
15ME1A0589	**15ME1A0587**	**15ME1A0570**	**15ME1A05A8**

ACKNOWLEDGEMENT

I wish to take this opportunity to express my deep gratitude to all the people who have extended their cooperation in various ways during my project work. It is my pleasure and responsibility to acknowledge the help of all those individuals.

I express my deepest gratitude to The Management of Ramachandra College of Engineering, Eluru for their support and encouragement in completing my project work and providing me necessary facilities.

My sincere thanks to **Mr.K.Gopi**, Asst Professor in the Department of CSE for helping me in successful completion of my project under his supervision.

I am very grateful to **Dr.G.Srinivasa Rao**, Head of the Department, Department of Computer Science & Engineering for his assistance and encouragement in all respects in carrying throughout my project work.

I express my deepest gratitude to **Dr.S.Dola Sanjay** Principal, Ramachandra College of Engineering, Eluru for his valuable suggestions during preparation of draft in my document.

I sincerely thank all the faculty members and staff of the Department of CSE for their valuable advices, suggestions and constant encouragement which played a vital role in carrying out this project work.

Finally I thank one and all who directly or indirectly helped me to complete my project work successfully.

P.Ramya	**N.V.S.Snigdha**	**M.Sahithi**	**T.Kamlish**
15ME1A0589	**15ME1A0587**	**15ME1A0570**	**15ME1A05A8**

ABSTRACT

The project Medical Expert System is a personal easy search option for mobile user. This Android based application provides Good User Interface to search options like. Information about diseases,. The disease names based on symptoms and creates awareness to the patients about medical expert system. Medical diagnosis is the process of determining which disease or condition explains a person's symptoms and signs. It is most often referred to as diagnosis with the medical context being implicit. The information required for diagnosis is typically collected froma history and physical examination of the person seeking medical care. Often, one or more diagnostic procedures, such as diagnostic tests, are also done during the process. Sometimes posthumous diagnosis is considered a kind of medical diagnosis.

Diagnosis is often challenging, because many signs and symptoms are nonspecific. For example, redness of the skin (erythema), by itself, is a sign of many disorders and thus does not tell the healthcare professional what is wrong. Thus differential diagnosis, in which several possible explanations are compared and contrasted, must be performed. This involves the correlation of various pieces of information followed by the recognition and differentiation of patterns. Occasionally the process is made easy by a sign or symptom (or a group of several) that is pathognomonic.

INDEX

S.No	Description	Page No.
	Abstract	
1	**Introduction**	**1**
1.1	Problem Definition	2
1.2	Existing System	2
1.3	Proposed System	2
1.3.1	Modules	2
1.4	Scope Of Project	3
2	**Literature Survey**	**4**
2.1	Java	5
2.2	Android	6
2.2.1	About Native Code	6
2.2.2	Creating An Android Project	7
2.2.3	To Create An AVD With The AVD Manager	8
2.2.4	To Create Or Modify A Launch Configuration	8
2.3	SQLITE	8
2.3.1	Design	8
2.3.2	Features	9

3	**System Analysis**	**10**
	Software Requirements	11
	Hardware Requirements	11
	Feasibility Study	11
	Economic Feasibility	11
	Operational Feasibility	12
	Technical Feasibility	12
4	**System Design**	**13**
	Architecture Diagram	14
	Data Flow Diagrams	14
	Unified Modeling Language(UML)	16
5	**System Coding And Implementation**	**24**
	Sample Code	25
	Method of Implementation	29
6	**Testing And Validation**	**30**
	Unit Testing	31
	Integration Testing	31
	Validation Testing	31
	System Testing	31
	Test Cases	32

7	**Screen Shots**	**34**
8	**Conclusion**	**43**
9	**References**	**45**

INTRODUCTION

1. INTRODUCTION

PROBLEM DEFINITION

One of the fastest growing industries now a day is mobile industry. There are many competitors in this area who are doing research and development on new platforms & user experience. One such technology is Android from Google which is supported for many manufactured phones. These phones are described as next Generation mobiles [As described by Google]. The project Medical Expert System is a personal easy search option for mobile user. This Android based application provides Good User Interface to search options like. Information about diseases,. The disease names based on symptoms and creates awareness to the patients about medical expert system.

EXISTING SYSTEM

- Patient has to go for the doctor even for a small reason.
- Patient will not have more knowledge about the diagnostics.
- Doctor has to cure the patients with his own knowledge.
- Doctor cannot get the complete information on diagnostic

PROPOSED SYSTEM

- Patient need not go to the doctor for very small reason.
- Patients, medical practitioners can improve their knowledge about the diagnostics.
- It provides the diagnostic information based on the symptoms given by the user.
- It provides the information on care to be taken by the patient.
- It can be used by the Doctors (Medical practitioners) for effective diagnosis.
- Patients, caregivers, medical professionals can get the information quickly within less time.

MODULES

MEDICAL Expert SYSTEM ON ANDROID is having the following modules

Modules in our application:

- Diseases
- Medical Information
- Symptoms
- Disease Information

Diseases

In this module application will provide the list of diseases and creates awareness to the patient without consulting to the doctor.

Disease Information

In this module application will search the list of diseases based of the user choice and gives over all information about the disease and creates the awareness to the patient.

Symptoms

In this module application will display the list of symptoms. User will select minimum 6 symptoms based upon the user choice and display the disease based upon the disease, overall information of the disease, medical information.

Medical Information

In this module application will display the medical information about the disease which is selected by the user. In this module medical information is nothing tablets and other related information about the disease.

Disease Information

In this module application will display the disease information about the disease which is selected by the user.

SCOPE OF PROJECT

One of the fastest growing industries is mobile industry. There are many competitors in this area who are doing research and development on new platforms & user experience. One such technology is Android from Google which is supported for Google phones. These phones are described as next Generation mobiles [As described by Google]. Developing application for such mobile phones using the open source android SDK is quite interesting. This makes the application call history quite easy, efficient, flexible and economic.

LITERATURE SURVEY

2. LITERATURE SURVEY

JAVA

Java is an object-oriented language, and is very similar to C++. Java is simplified to eliminate language features that cause common programming errors. Java source code files are compiled into a format called byte code, which can then be executed by a Java interpreter. Features being **[1,2,6,16]**

1. Platform Independent

The programs written on one platform can run on any platform provided the platform must have the JVM.

2. Portable

The feature Write-once-run-anywhere makes the java language portable provided that the system must have interpreter for the JVM.

3. Simple

Programs are easy to write and debug because java does not use the pointers explicitly. It also has the automatic memory allocation and deallaocation system.

4. Multithreaded

Multithreading means a single program having different threads executing independently at the same time.

5. Robust

Java has the strong memory allocation and automatic garbage collection mecha-

nism. It provides the powerful exception handling and type checking mechanism as compare to other programming languages.

6. Object Oriented

To be an Object Oriented language, any language must follow at least the four characteristics. **[1,2,6,16,18]**

- Inheritance
- Encapsulation
- Polymorphism
- Dynamic binding

7. Distributed

The widely used protocols like HTTP and FTP are developed in java. Internet programmers can call functions on these protocols and can get access to the files from any remote machine on the internet rather than writing codes on their local system.

8. Secure

All the programs in java are run under an area known as the sand box. Security manager determines the accessibility options of a class like reading and writing a file to the local disk.

9. High Performance

In the beginning interpretation of byte code resulted in slow performance but the advance version of JVM uses the adaptive and just in time compilation technique that improves the performance.

10. Integrated

Java is an interpreted language as well. Programs run directly from the source code.

ANDROID

Android is a software stack for mobile devices that includes an operating system, middleware and key applications. The android SDK provides the tools and APIs necessary to begin developing applications on the Android platform using the Java programming language.

The Android SDK includes a comprehensive set of development tools. These include a debugger, libraries, a handset emulator (based on QEMU), documentation, sam-

ple code, and tutorials. Currently supported development platforms include x86-architecture computers running Linux (any modern desktop Linux distribution), Mac OS X 10.4.8 or later, Windows XP or Vista. The officially supported integrated development environment (IDE) is Eclipse (3.2 or later) using the Android Development Tools (ADT) Plug in, though developers may use any text editor to edit Java and XML files then use command line tools to create, build and debug Android applications.

About Native Code:

Libraries written in C and other languages can be compiled to ARM native code and installed, but the Native Development Kit is not yet officially supported by Google. Native classes can be called from Java code running under the Dalvik VM using the System. Load Library call, which is part of the standard Android Java classes.

Creating an android project

The ADT plug-in provides a New Project Wizard that you can use to quickly create a new Android project (or a project from existing code). To create a new project:

- Select File > New > Project.
- Select Android > Android Project, and click Next.
- Select the contents for the project:
- Enter a Project Name. This will be the name of the folder where your project is created.
- Under Contents, select Create new project in workspace. Select your project workspace location.
- Under Target, select an Android target to be used as the project's Build Target. The Build Target specifies which Android platform you'd like your application

built against.

- Unless you know that you'll be using new APIs introduced in the latest SDK, you should select a target with the lowest platform version possible, such as Android 1.1.

- Under Properties, fill in all necessary fields :

Enter an Application name. This is the human-readable title for your application — the name that will appear on the Android device.

i. Enter a Package name. This is the package namespace (following the same rules as for packages in the Java programming language) where all your source code will reside.

ii. Select Create Activity (optional, of course, but common) and enter a name for your main Activity class.

iii. Enter a Min SDK Version. This is an integer that indicates the minimum API Level required to properly run your application. Entering this here automatically sets the min Sdk Version attribute in the <uses-sdk> of your Android Manifest file. If you're unsure of the appropriate API Level to use, copy the API Level listed for the Build Target you selected in the Target tab.

iv. Click Finish.

To create an AVD with the AVD manager:

- Select Window > Android SDK and AVD Manager, or click the Android SDK and AVD Manager icon (a black device) in the Eclipse toolbar.

- In the Virtual Devices panel, you'll see a list of existing AVDs. Click New to create a new AVD.

- Fill in the details for the AVD.
- Give it a name, a platform target, an SD card image (optional), and a skin (HVGA is default).
- Click Create AVD.

When you first run a project as an Android Application, ADT will automatically create a run configuration. The default run configuration will launch the default project Activity and use automatic target mode for device selection (with no preferred AVD).

To Create or Modify a Launch Configuration

Follow these steps as appropriate for your Eclipse version:

- Open the run configuration manager.
- In Eclipse 3.3 ,select **Run > Open Run Dialog** (or Open Debug Dialog)
- In Eclipse 3.4 (Ganymede), select **Run > Run Configurations** (or Debug Configurations)
- Expand the Android Application item and create a new configuration or open an existing one.

SQLITE

SQLite is an ACID-compliant embedded relational database management system contained in a relatively small C programming library. The source code for SQLite is in the public domain.

Design

Unlike client-server database management systems, the SQLite engine is not a standalone process with which the application program communicates. Instead, the

SQLite library is linked in and thus becomes an integral part of the application program. The library can also be called dynamically. The application program uses SQLite's functionality through simple function calls, which reduces latency in database access as function calls within a single process are more efficient than inter-process communication.

Features

SQLite implements most of the SQL-92 standard for SQL but it lacks some features. A standalone program called sqlite3 is provided which can be used to create a database, define tables within it, insert and change rows, run queries and manage an SQLit e database file. SQLite is a popular choice for local/client SQL storage within a web browser and within a rich internet application framework. This may be because SQLite's dynamically typed storage matches the web browser's core languages of Javascript and XML. SQLite uses an unusual type system for an SQL-compatible DBMS. Instead of assigning a type to a column as in most SQL database systems, types are assigned to individual values; in language terms it is dynamically typed.

SYSTEM ANALYSIS

3.SYSTEM ANALYSIS .

[8,9,12,13,14,15,17,18]

SOFTWARE REQUIREMENTS

- Java [6]
- Android SDK 1.5 or later
- Eclipse Ganymede IDE
- Operating System can be Windows XP, LINUX and Mac etc.

HARDWARE REQUIREMENTS

1. PROCESSOR : (min) P2 Processor
2. RAM : 4GB
3. HARD DISK : 500 MB

FEASIBILITY STUDY

An important outcome of the preliminary investigation is the determination that system requested is feasible. This is to identify the objectives of a new system. Before solving a problem one must know what the problem is. The study is carried out by a small group of people who are familiar with system analysis and design process. Fact finding techniques are used to gather the required information.[8,9,12,13,14,15,17,18]

The three major areas consider while determining the feasibility of the project are

1. Economic Feasibility
2. Operational Feasibility

3. Technical Feasibility

Economic Feasibility

Economic feasibility attempts to weigh the costs of developing and implementing a new system, against the benefits that would accrue from having the new system in place. This feasibility study gives the top management the economic justification for the new system.

A simple economic analysis which gives the actual comparison of costs and benefits are much more meaningful in this case. These could include increased customer satisfaction, improvement in product quality better decision making timeliness of information, expediting activities, improved accuracy of operations, better documentation and record keeping, faster retrieval of information, better employee morale.

Operational Feasibility

Proposed projects are beneficial only if they can be turned into information systems that will meet the organizations operating requirements. Simply stated, this test of feasibility asks if the system will work when it is developed and installed. Are there major barriers to Implementation? Here are questions that will help test the operational feasibility of a project:

Is there sufficient support for the project from management from users? If the current system is well liked and used to the extent that persons will not be able to see reasons for change, there may be resistance.

Are the current business methods acceptable to the user? If they are not, Users may welcome a change that will bring about a more operational and useful systems.

Have the user been involved in the planning and development of the project?

Early involvement reduces the chances of resistance to the system and in general and increases the likelihood of successful project. Since the proposed system was to help reduce the hardships encountered. In the existing manual system, the new system was considered to be operational feasible.

Technical Feasibility

Evaluating the technical feasibility is the trickiest part of a feasibility study. This is because, at this point in time, not too many-detailed design of the system, making it difficult to access issues like performance, costs on (on account of the kind of technology to be deployed) etc.

A number of issues have to be considered while doing a technical analysis.

i) Understand the different technologies involved in the proposed system:

Before commencing the project, we have to be very clear about what are the technologies that are to be required for the development of the new system.

ii) Find out whether the organization currently possesses the required technologies:
Is the required technology available with the organization?
If so is the capacity sufficient?
For instance -
"Will the current printer be able to handle the new reports and forms required for the new system?"

SYSTEM DESIGN

4. SYSTEM DESIGN

.[8,9,12,13,14,15,17,18]

ARCHITECTURE DIAGRAM

Architecture diagram is a diagram of a system, in which the principal parts or functions are represented by blocks connected by lines that show the relationships of the blocks. The block diagram is typically used for a higher level, less detailed description aimed more at understanding the overall concepts and less at understanding the details of implementation.

Fig 4.1 Architecture of Call History

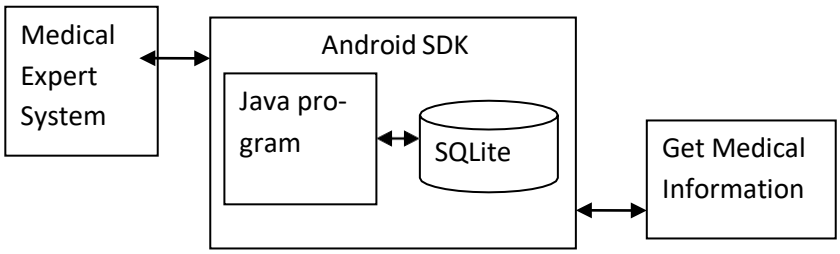

DATA FLOW DIAGRAMS

A data-flow diagram (DFD) is a graphical representation of the "flow" of data through an information system. DFDs can also be used for the visualization of data processing (structured design).

On a DFD, data items flow from an external data source or an internal data store to an internal data store or an external data sink, via an internal process. The idea behind

the explosion of a process into more process is that understanding at one level of detail is exploded into greater detail at the next level. This is done further explosion is necessary and an adequate amount of detail is described for analyst to understand the process.

"A DFD is also known as a "bubble chart" has the purpose of clarifying system requirements and identifying major transformations that will become programs in system design.

So it is the starting point of the design to the lowest level of detail. A DFD consists of a series of bubbles joined by data flows in the system.

DFD Symbols

In the DFD, there are four symbols

1. A Square defines a source or destination of system data.
2. An arrow identifies data flow. It is the pipeline through which the information flows.
3. A circle or a bubble represents a process that transforms incoming data flow into outgoing data flows.
4. An open rectangle is a data store ,data at rest or a temporary repository of data

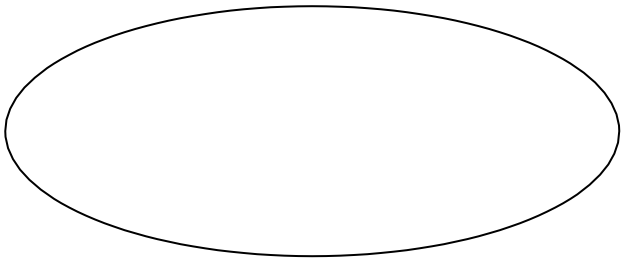

Process that transforms data flow

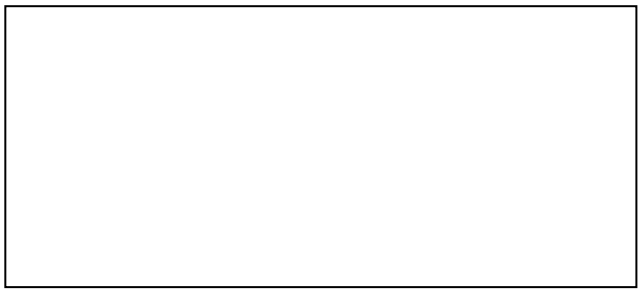

Source or destination of data

Data flow

Data store

UNIFIED MODELING LANGUAGE (UML)

The unified modeling is a standard language for specifying, visualizing, constructing and documenting the system and its components is a graphical language which provides a vocabulary and set of semantics and rules. The UML focuses on the conceptual and physical representation of the system. It captures the decisions and understandings about systems that must be constructed. It is used to understand, design, configure and control information about the systems.

Depending on the development culture, some of these artifacts are treated more or less formally than others. Such artifacts are not only the deliverables of a project; they are also critical in controlling, measuring, and communicating about a system during its development and after its deployment.

The UML addresses the documentation of a system's architecture and all of its details. The UML also provides a language for expressing requirements and for tests. Finally, the UML provides a language for modeling the activities of project planning and release management.

Building Blocks of the UML:

The vocabulary of the UML encompasses three kinds of building blocks:

1. Things
2. Relationships
3. Diagrams

Things are the abstractions that are first-class citizens in a model; relationships tie these things together; diagrams group interesting collections of things.

Things in the UML:

There are four kinds of things in the UML:

1. Structural things
2. Behavioral things
3. Grouping things
4. Annotational things

UML Diagram For Medical diagnosis:

Class diagram for Medical diagnosis:

In software engineering, a class diagram in the Unified Modeling Language (UML) is a type of static structure diagram that describes the structure of a system by showing the system's classes, their attributes, operations (or methods), and the relationships among objects.

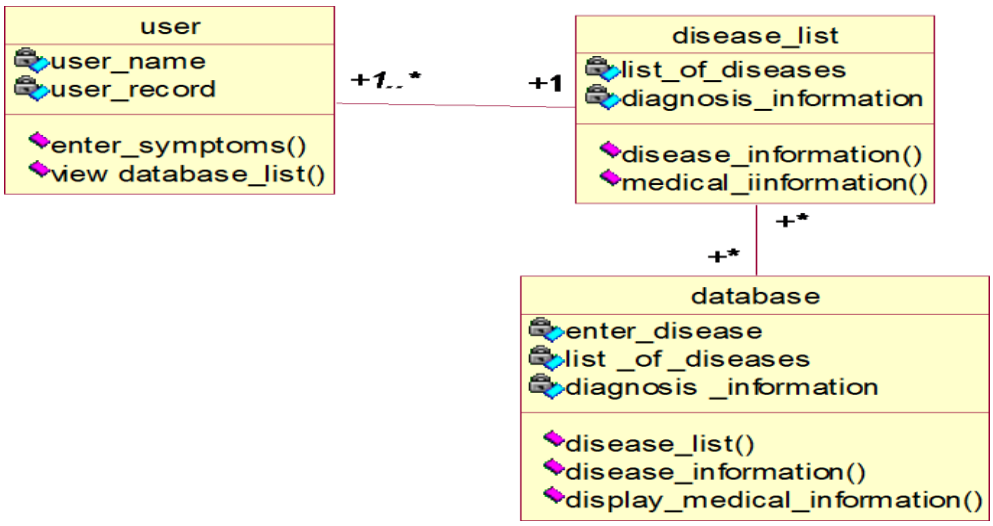

Object Diagram for Medical diagnosis:

An object diagram is a graph of instances, including objects and data values. A static object diagram is an instance of a class diagram; it shows a snapshot of the detailed state of a system at a point in time. The use of object diagrams is fairly limited, namely to show examples of data structure.

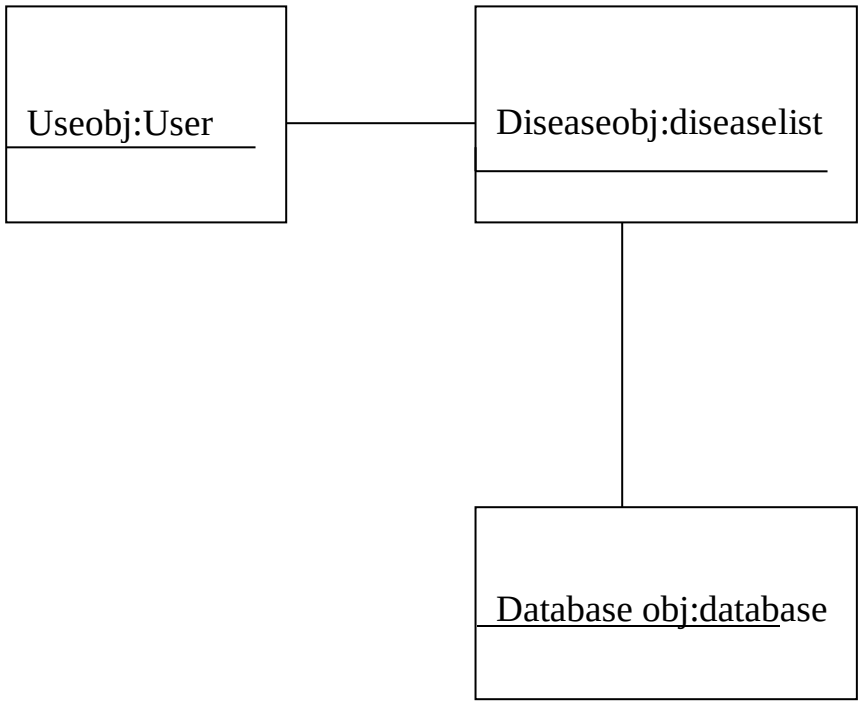

Usecase diagram for Medical diagnosis:

A use case diagram at its simplest is a representation of a user's interaction with the system that shows the relationship between the user and the different use cases in which the user is involved.

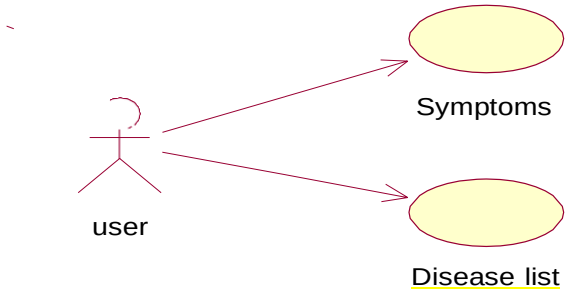

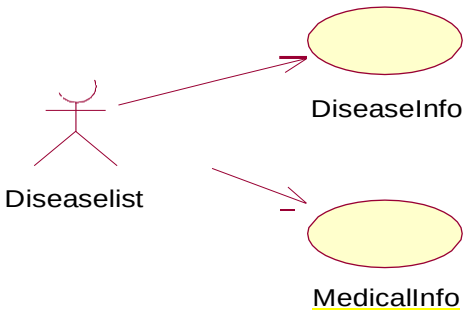

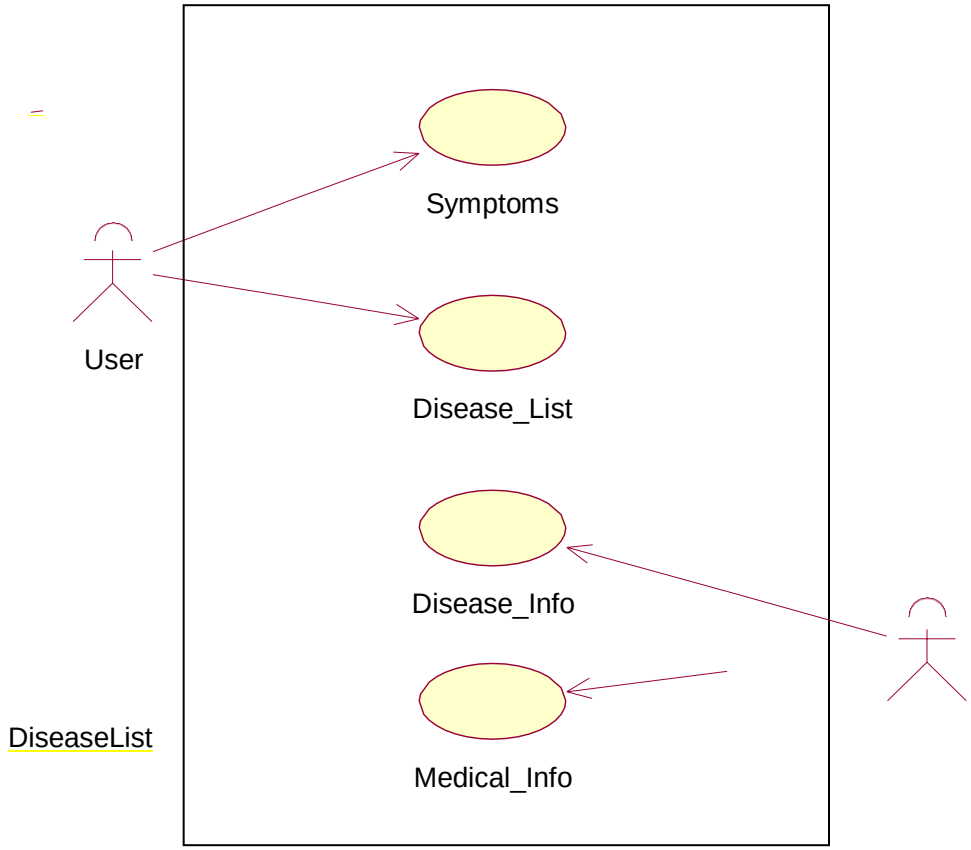
Symptoms
User
Disease_List
Disease_Info
Medical_Info
DiseaseList

Sequence Diagram for Medical diagnosis:

A sequence diagram simply depicts interaction between objects in a sequential order i.e. the order in which these interactions take place. We can also use the terms event diagrams or scenarios to refer to a sequence diagram. Sequence diagrams describe how and in what order the objects in a system function.

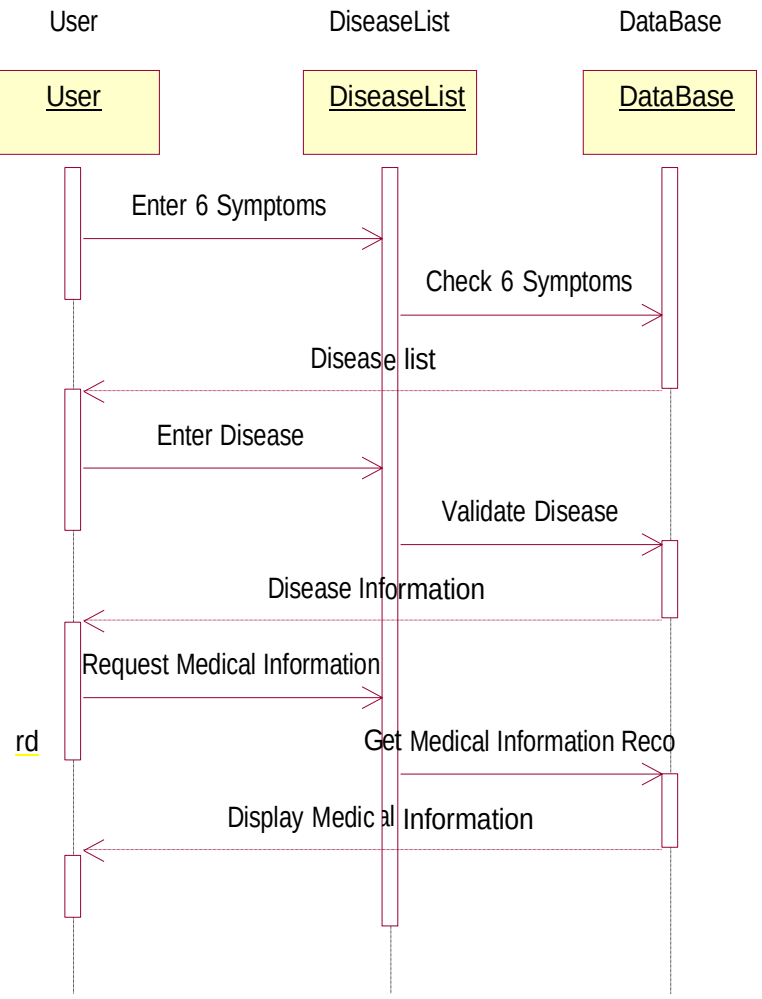

Activity Diagram for Medical diagnosis:

Activity diagram is another important diagram in UML to describe the dynamic aspects of the system.Activity diagram is basically a flowchart to represent the flow from one activity to another activity. The activity can be described as an operation of the system.

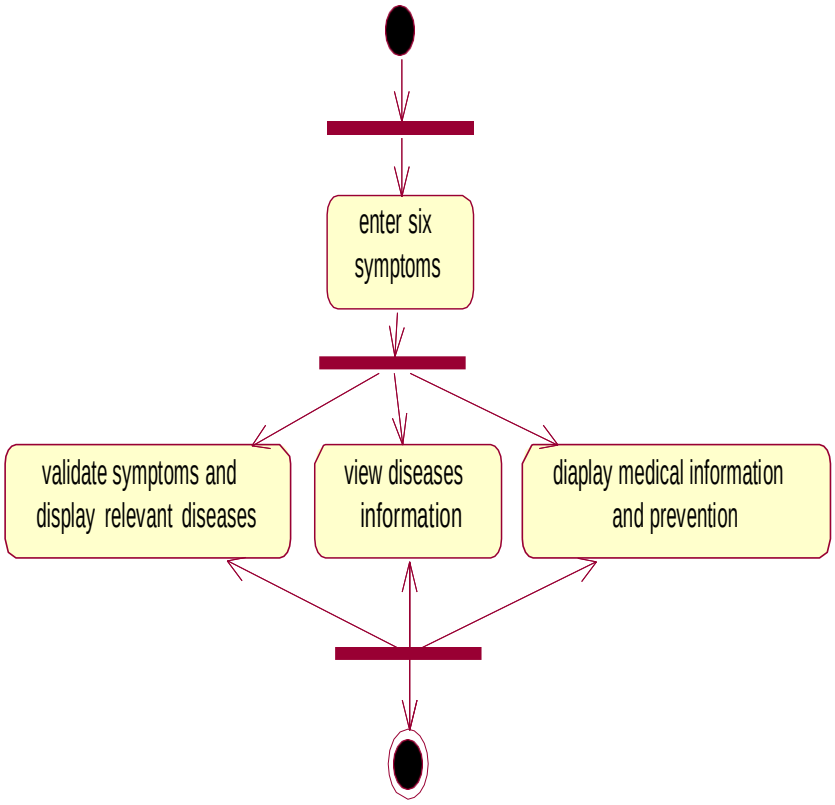

Deployment Diagram for Medical diagnosis:

A deployment diagram is a UML diagram type that shows the execution architecture of a system, including nodes such as hardware or software execution environments, and the middleware connecting them. Deployment diagrams are typically used to visualize the physical hardware and software of a system.

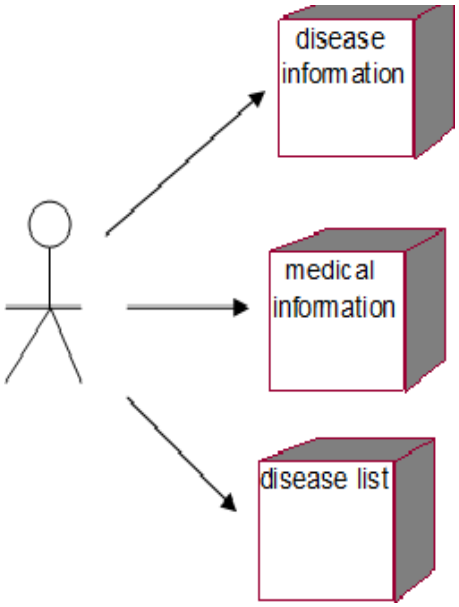

SYSTEM CODING AND IMPLEMENTATION

5.SYSTEM CODING AND IMPLEMENTATION

[3,9,17,1,2]

5.1 CODING

```
package com.srinidhi.ecm;

import java.io.IOException;
import java.util.ArrayList;
import java.util.List;
import com.srinidhi.ecm.DBHandandler;
import android.app.ListActivity;
import android.content.Intent;
import android.database.Cursor;
import android.database.SQLException;
import android.database.sqlite.SQLiteDatabase;
import android.os.Bundle;
import android.view.View;
import android.widget.AdapterView;
import android.widget.ArrayAdapter;
import android.widget.ListView;
import android.widget.Toast;

public class diseaselist extends ListActivity {
    DBHandandler myDbHelper;
    SQLiteDatabase Mydatabase;
    ArrayList<String> stattionlist;
    String[] abc;
    public void onCreate(Bundle savedInstanceState) {
    super.onCreate(savedInstanceState);
    this.myDbHelper = new DBHandandler(this);
            FetchingData();
```

```
            stattionlist=this.myDbHelper.getNames(Mydatabase);
            final ListView lv=getListView();
            ArrayAdapter<String> lv1=new ArrayAdapt-
er<String>(getApplicationContext(),android.R.layout.simple_list_item_1,stattionlist);
            lv.setAdapter(lv1);
            lv.setOnItemClickListener(new an-
droid.widget.AdapterView.OnItemClickListener() {

            private View view;
                  public void onItemClick(AdapterView<?> parent, View view,int
position, long id) {
              // When clicked, show a toast with the TextView text


String s1=stattionlist.get(position);
Toast.makeText(getApplicationContext(),"You selected " + s1 +" disease",
Toast.LENGTH_LONG).show();
Intent myIntent = new Intent(getApplicationContext(), tab.class);
myIntent.putExtra("name",s1);
startActivity(myIntent);

}


          });
    }
            private void FetchingData() {
            // TODO Auto-generated method stub
            try {
            myDbHelper.onCreateDataBase();
```

```
            } catch (IOException ioe) {

                throw new Error("Unable to create database");

            }
            try {

                myDbHelper.openDataBase();
                Mydatabase = myDbHelper.getWritableDatabase();
                System.out.println("executed");

            }catch(SQLException sqle){
                throw sqle;
            }
 }
}
package com.srinidhi.ecm;
import java.io.IOException;
import java.sql.SQLException;
import java.util.ArrayList;

import android.app.Activity;
import android.database.sqlite.SQLiteDatabase;
import android.os.Bundle;
import android.widget.TextView;
import android.widget.Toast;

public class medication extends Activity {
    String s1="",s2="",s3="";
    TextView tv,tv1;
    DBHandandler myDbHelper;
```

```
SQLiteDatabase Mydatabase;
String stattionlist;
public void onCreate(Bundle savedInstanceState) {

  super.onCreate(savedInstanceState);
this.myDbHelper = new DBHandandler(this);
try {
                FetchingData();
        } catch (SQLException e) {
                // TODO Auto-generated catch block
                e.printStackTrace();
        }

  setContentView(R.layout.information);
  tv=(TextView)findViewById(R.id.TextView02);
  tv1=(TextView)findViewById(R.id.TextView01);
  Bundle b=getIntent().getExtras();
  tv1.setText("Prevention and Medication");
  if(b!=null)
  {
        s1=b.getString("name");
        //System.out.print("hey..."+s1);
        //Toast.makeText(getApplicationContext(),"hai"+s1,100).show();

  }

  stattionlist=this.myDbHelper.getmInfo(Mydatabase,s1);
  tv.setText(stattionlist);

}
private void FetchingData() throws SQLException {
        // TODO Auto-generated method stub
```

```
            try {
            myDbHelper.onCreateDataBase();

            } catch (IOException ioe) {

                  throw new Error("Unable to create database");

            }
            myDbHelper.openDataBase();
            Mydatabase = myDbHelper.getWritableDatabase();
            System.out.println("executed");

      }


}
```

5 2.Method of Implementation

Implementation literally means to put into effect or to carry out. The system implementation phase of the software deals with the translation of the design specifications into the source code. The ultimate goal of the implementation is to write the source code and the internal documentation so that it can be verified easily. The code and documentation should be written in a manner that eases debugging, testing and modification. System flowcharts, sample run on packages, sample output etc. Is part of the implementation?

An effort was made to satisfy the following goals in order specified.

- Minimization of Response Time.
- Clarity and Simplicity of the Code.
- Minimization of Hard-Coding.

Various types of bugs were discovered while debugging the modules. These ranged from logical errors to failure on account of various processing cases.

TESTING AND VALIDATION

6. TESTING AND VALIDATION

[14,15,7,13,17,18]

The development of software systems involves of a series of production activities where opportunities for injection of human fallibilities are enormous. Errors may begin to occur at the very inception of the process where the objectives may be erroneously or imperfectly specified, as well as in later design and development stages. Because of human inability to perform and communicate with perfection, software development is accompanied by a quality assurance activity.

TESTING TECHNIQUES:

Testing is the process of executing a program with the intention of finding errors. The various test strategies used for testing the software are as follows.

Unit Testing

Unit testing focuses on verification effort on the smallest unit of the software design module. The main goal is to make sure that every source statement and logic path has been executed correctly at least once. The output of this stage is the source code.

Integration Testing

In Integration testing, we find errors that have occurred during the integration. After testing each module, which is then integrated into subsystems and then to form the entire system on which integration testing is performed. The goal of testing is to detect the design errors, while focusing on the testing the interconnection between modules.

Validation Testing

This testing concentrates on confirming that the software is error-free in all respects. All the specified validations are verified and the software is subjected to hard-core testing. It also aims at determining the degree of deviation that exists in the software designed from the specification; they are listed out and are corrected.

System Testing

In this testing, the system is tested for the errors after coupling all the modules together The system is tested against the specified requirements to see if all the requirements are met and the system performs as specified by the requirements.

Test cases

Test case 1: Diseases	**Priority (H, L):** High
Test Objective: For database creation.[4][7]	
Test Description:the list of diseases and creates awareness to the patient without consulting to the doctor.	
Requirements Verified: Yes	
Test Environment: Application must be deployed in android mobile phone or emulator.	
Test Setup/Pre-Conditions:	
Pass: Yes Conditions pass: Yes Fail: No	
Problems / Issues: NIL	
Notes: Successfully Executed	

A test case is a software testing document, which consists of event, action, input, output, expected result and actual result. Larger test cases may also contain prerequisite states or steps, and descriptions. A test case should also contain a place for the actual result. These steps can be stored in a word processor document, spreadsheet, database or other common repository.

Test case 2: Medical Information	**Priority (H, L):** High
Test Objective: For database creation.[4][7]	
Test Description: tablets and other related information about the disease	
Requirements Verified: Yes	
Test Environment: Application must be deployed in android mobile phone or emulator.	
Test Setup/Pre-Conditions:	
Pass: Yes Conditions pass: Yes Fail: No	
Problems / Issues: NIL	
Notes: Successfully Executed	

Test case 3: Symptoms	**Priority (H, L):** High
Test Objective: For database creation.	
Test Description: User will select minimum 6 symptoms based upon the user choice and display.	
Requirements Verified: Yes	
Test Environment: Application must be deployed in android mobile phone or emulator.	
Test Setup/Pre-Conditions:	
Pass: Yes Conditions pass: Yes Fail: No	
Problems / Issues: NIL	
Notes: Successfully Executed	

SCREEN SHOTS

7. SCREENSHOTS

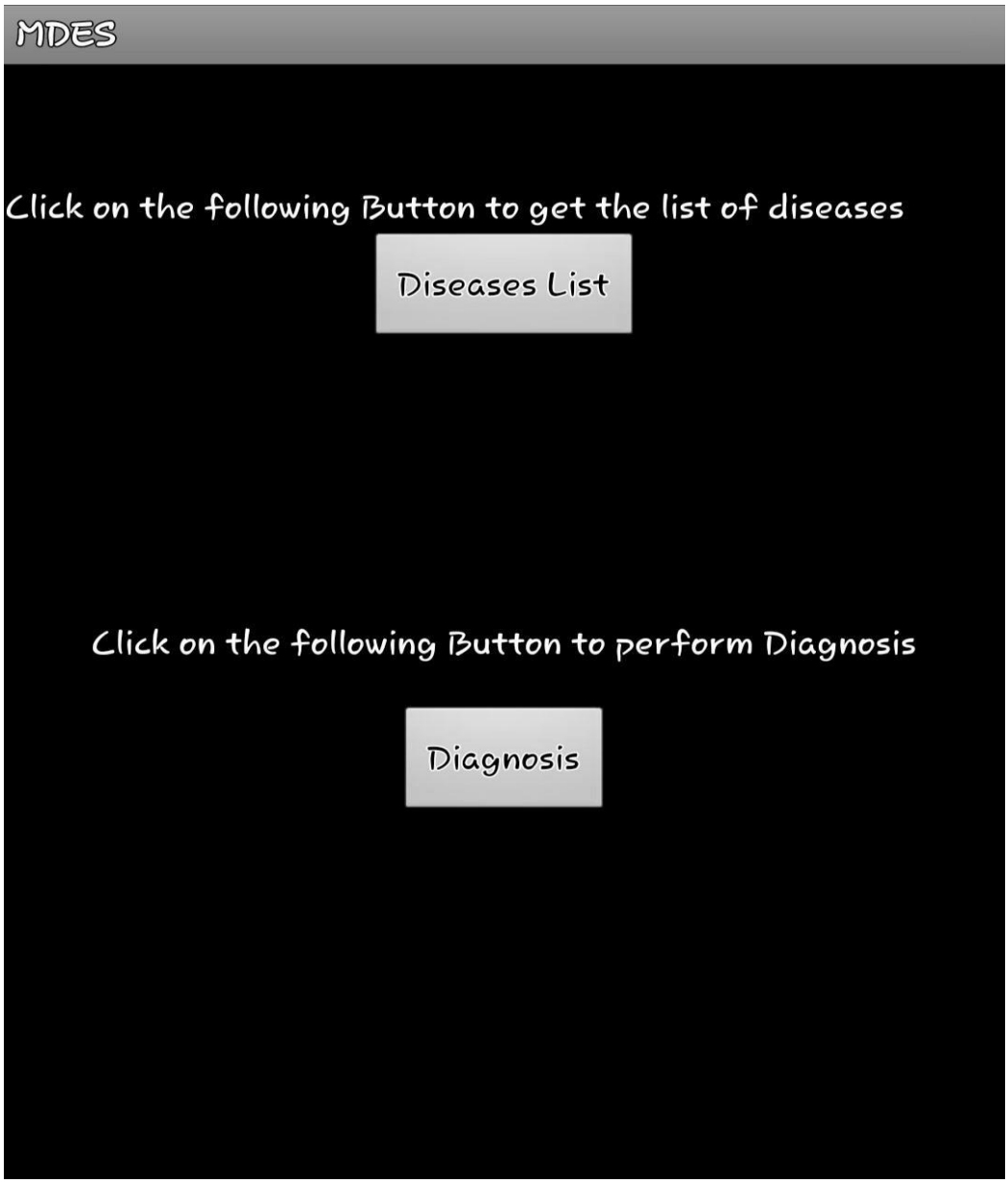

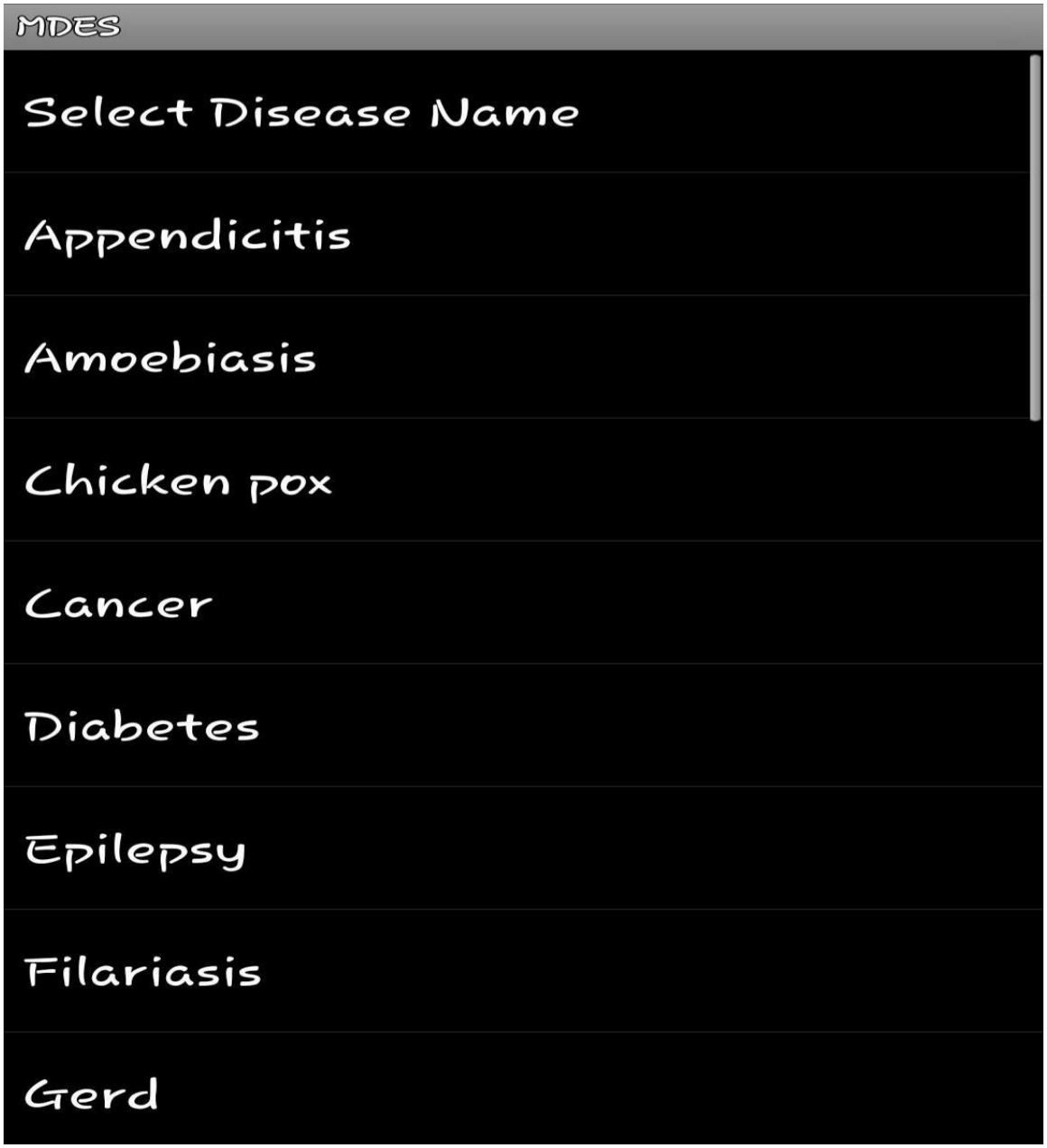
MDES
Select Disease Name
Appendicitis
Amoebiasis
Chicken pox
Cancer
Diabetes
Epilepsy
Filariasis
Gerd

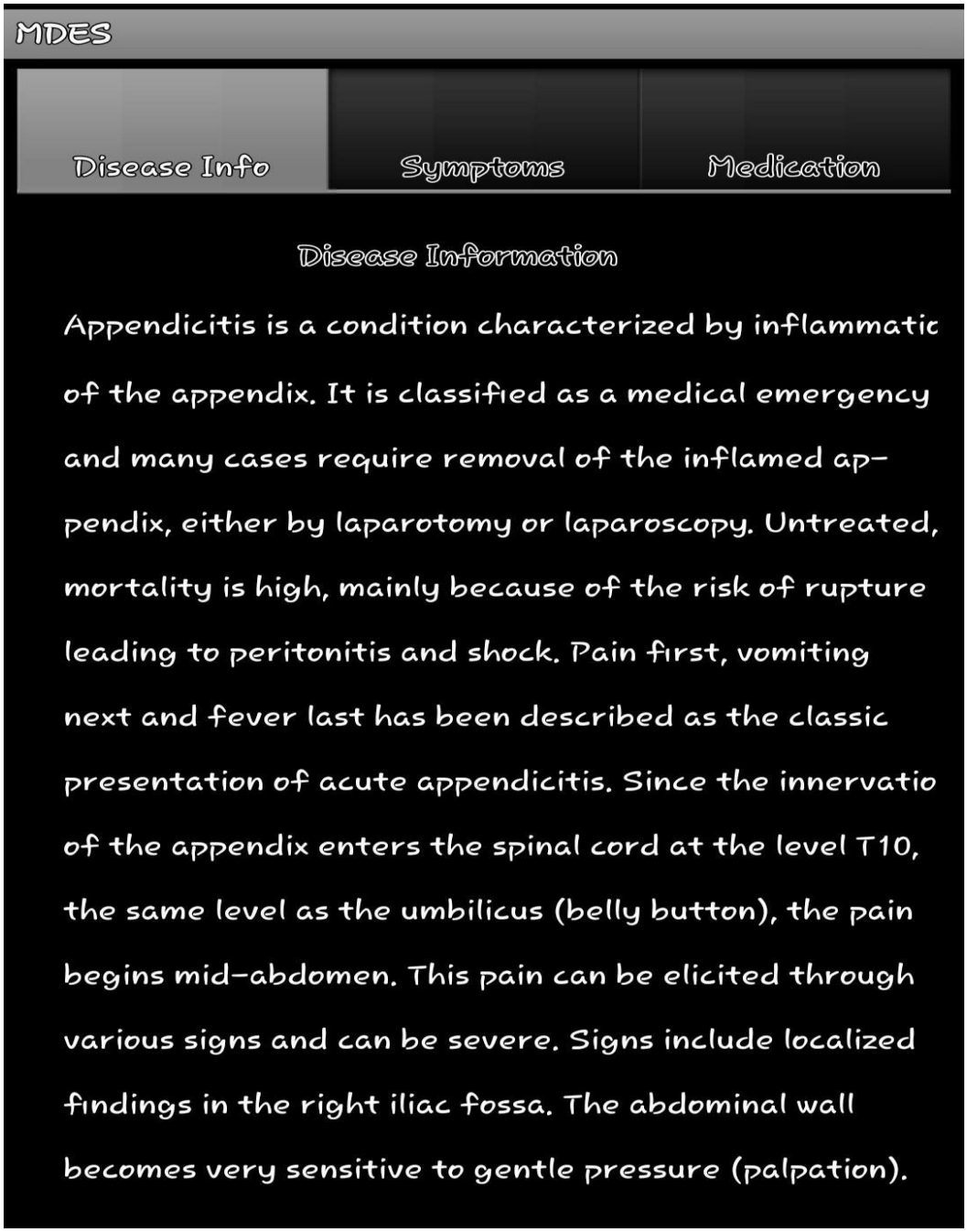
MDES
Disease Info
Symptoms
Medication
Disease Information
Appendicitis is a condition characterized by inflammatic
of the appendix. It is classified as a medical emergency
and many cases require removal of the inflamed ap-
pendix, either by laparotomy or laparoscopy. Untreated,
mortality is high, mainly because of the risk of rupture
leading to peritonitis and shock. Pain first, vomiting
next and fever last has been described as the classic
presentation of acute appendicitis. Since the innervatio
of the appendix enters the spinal cord at the level T10,
the same level as the umbilicus (belly button), the pain
begins mid-abdomen. This pain can be elicited through
various signs and can be severe. Signs include localized
findings in the right iliac fossa. The abdominal wall
becomes very sensitive to gentle pressure (palpation).

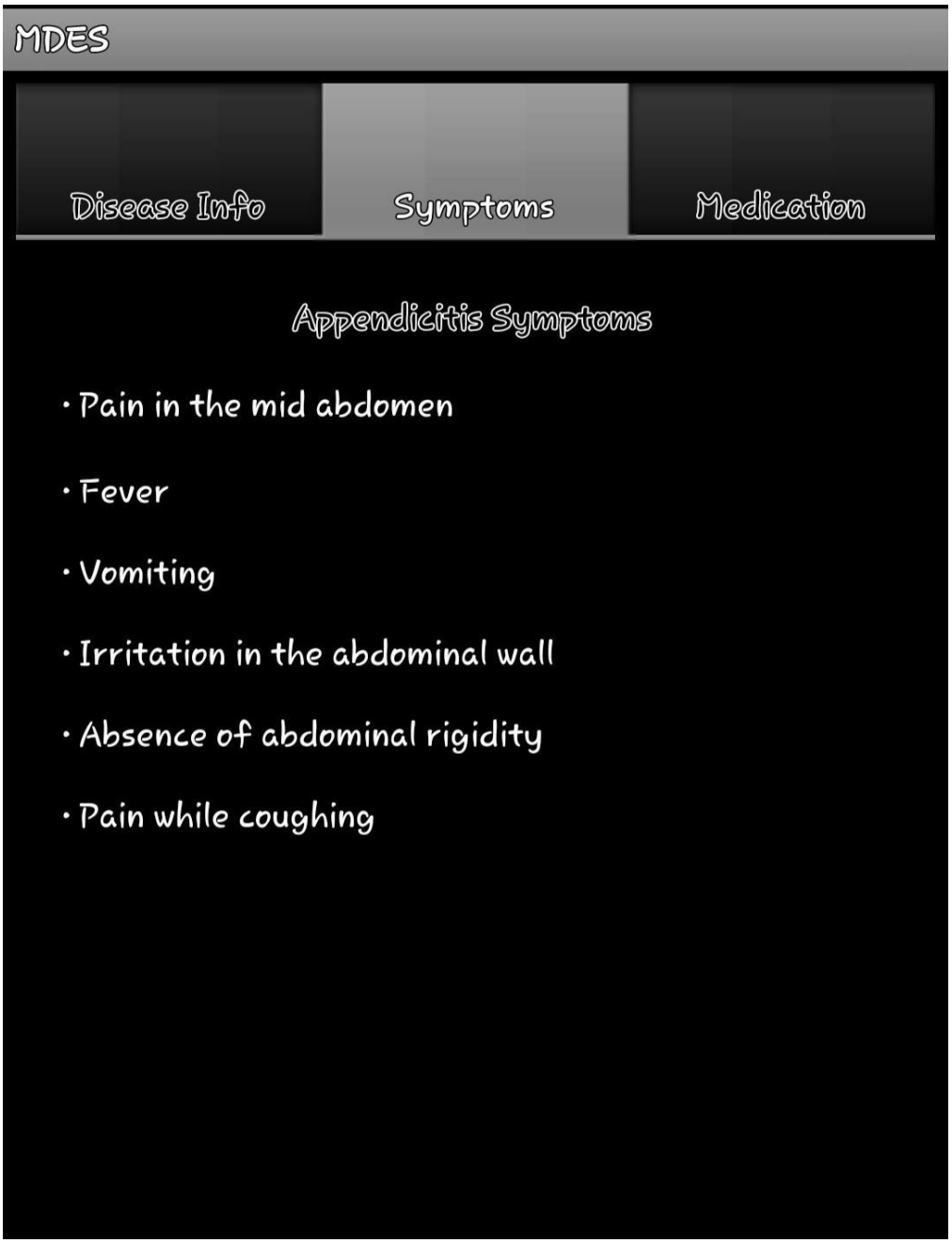
MDES
Disease Info
Symptoms
Medication
Appendicitis Symptoms
• Pain in the mid abdomen
• Fever
• Vomiting
• Irritation in the abdominal wall
• Absence of abdominal rigidity
• Pain while coughing

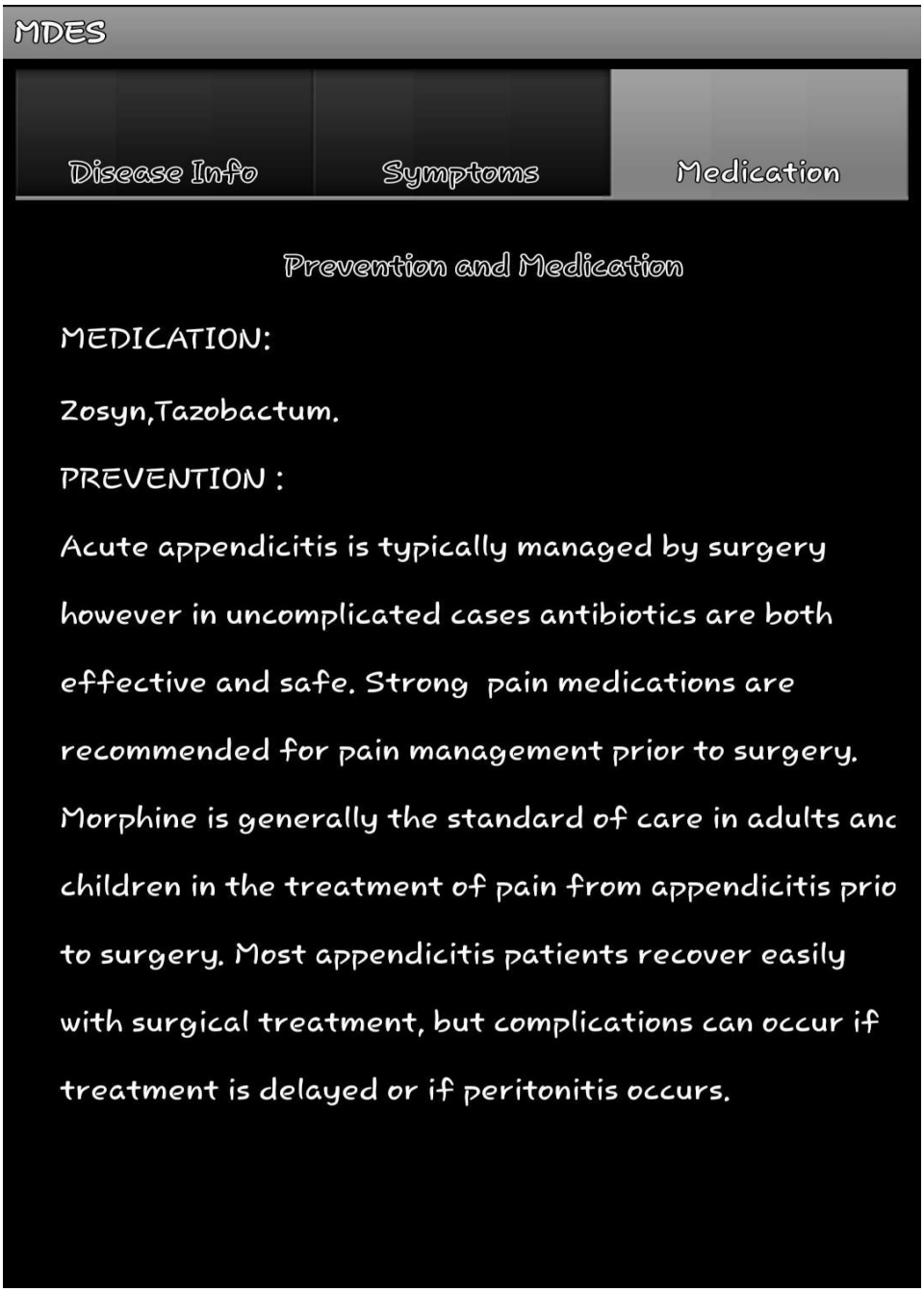
MDES
Disease Info
Symptoms
Medication
Prevention and Medication
MEDICATION:
Zosyn,Tazobactum.
PREVENTION :
Acute appendicitis is typically managed by surgery however in uncomplicated cases antibiotics are both effective and safe. Strong pain medications are recommended for pain management prior to surgery. Morphine is generally the standard of care in adults anc children in the treatment of pain from appendicitis prio to surgery. Most appendicitis patients recover easily with surgical treatment, but complications can occur if treatment is delayed or if peritonitis occurs.

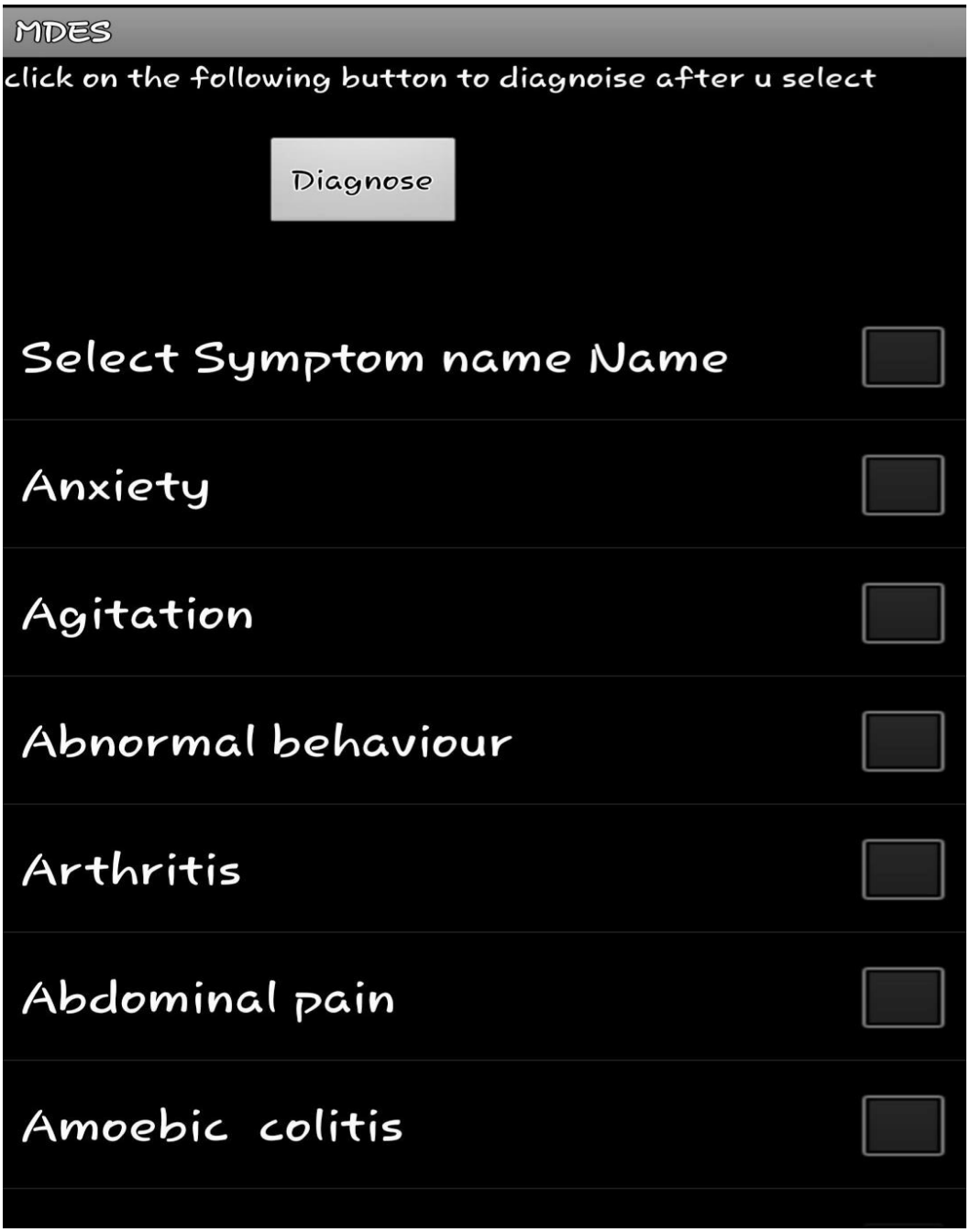
MDES
click on the following button to diagnoise after u select
Diagnose
Select Symptom name Name
Anxiety
Agitation
Abnormal behaviour
Arthritis
Abdominal pain
Amoebic colitis

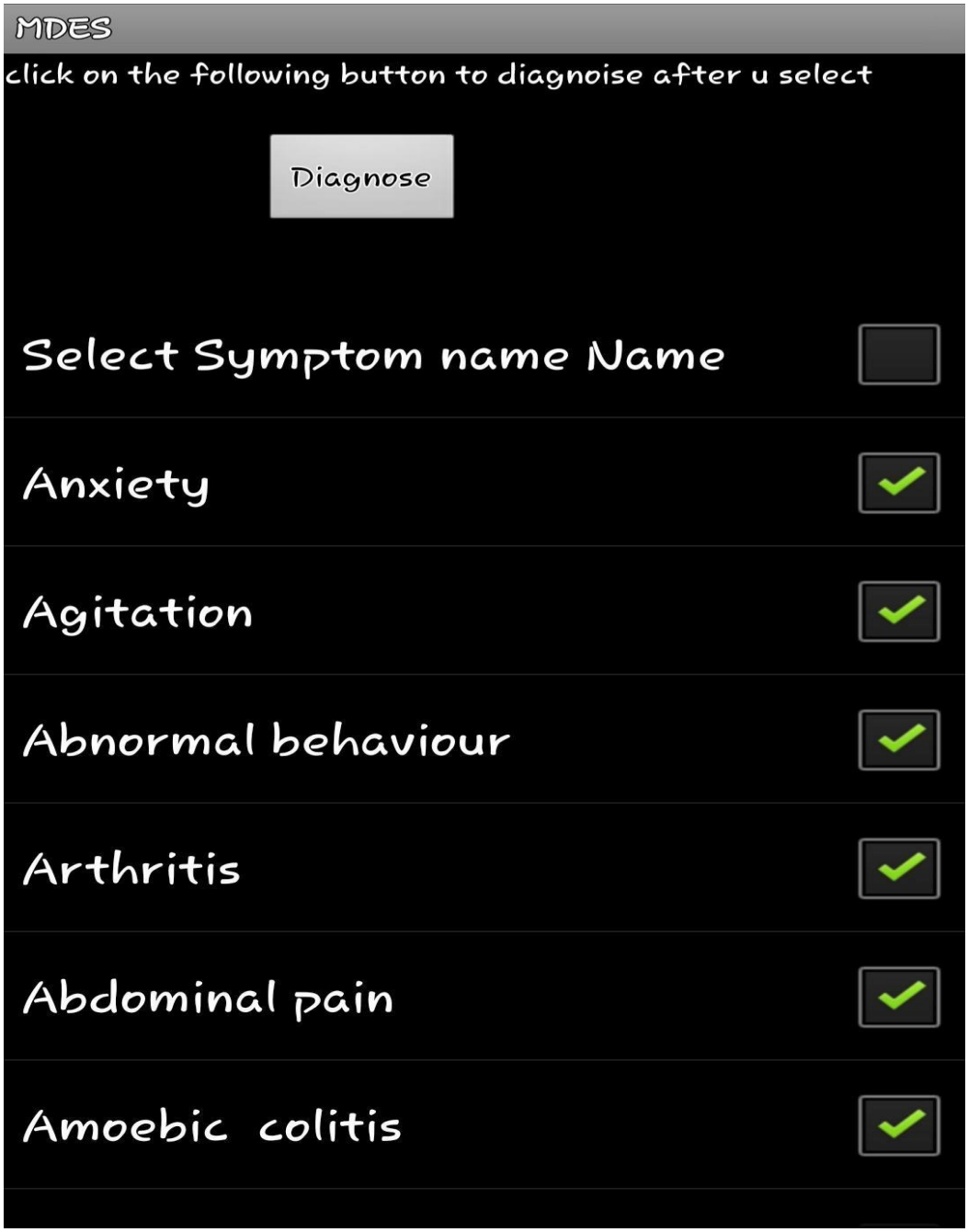
MDES
click on the following button to diagnoise after u select
Diagnose
Select Symptom name Name
Anxiety
Agitation
Abnormal behaviour
Arthritis
Abdominal pain
Amoebic colitis

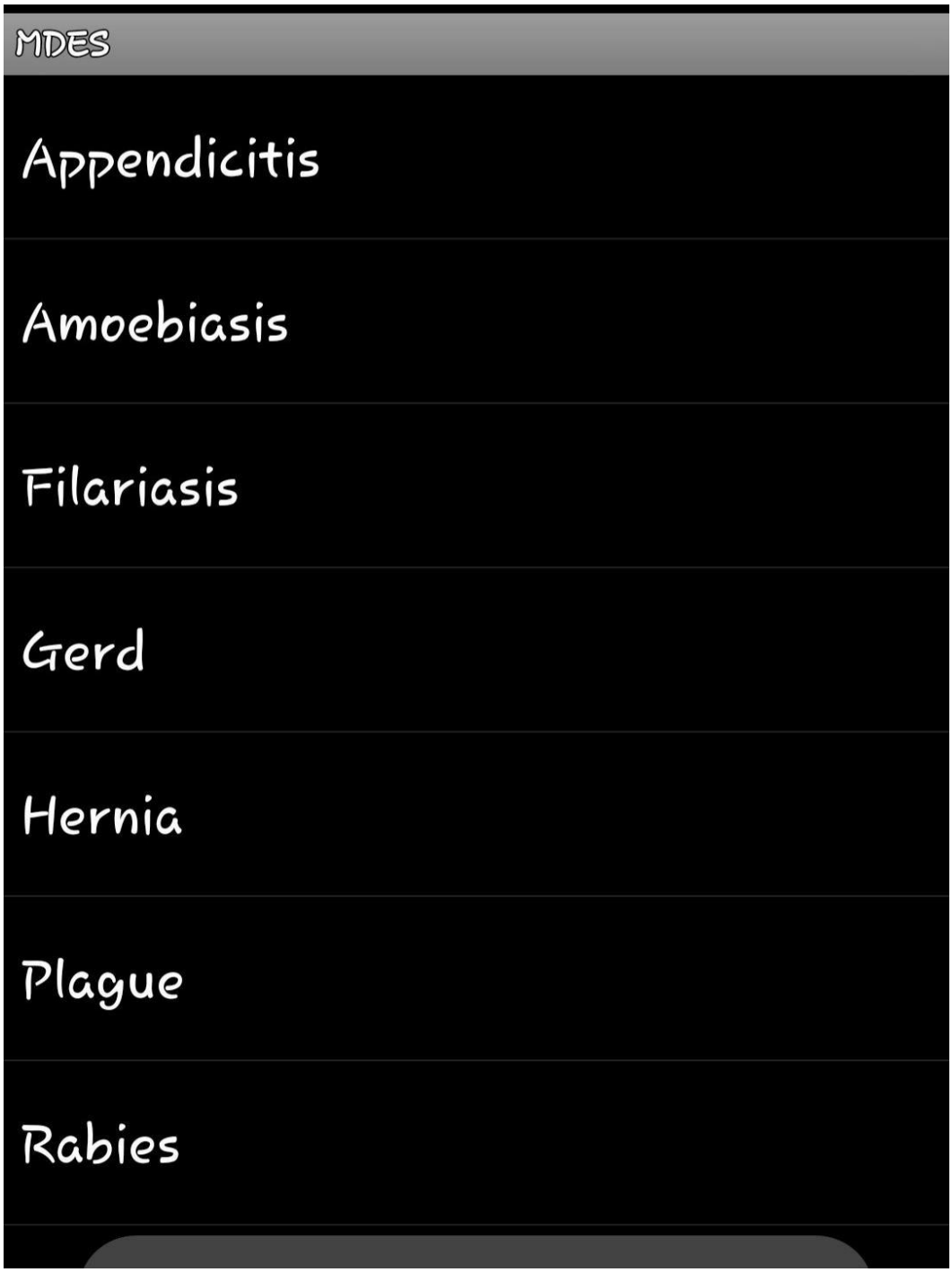
MDES
Appendicitis
Amoebiasis
Filariasis
Gerd
Hernia
Plague
Rabies

CONCLUSION

8. CONCLUSION

This application is used for getting Medical Expert System. This application is build in Google mobiles using Android SDK. It is a tool developed for android platform, . The project Medical Expert System is a personal easy search option for mobile user. This Android based application provides Good User Interface to search options like. Information about diseases,. The disease names based on symptoms and creates awareness to the patients about medical expert system.

REFERENCES

9. REFERENCES

1. Herbert Schildt.2008 ,"Java Complete Reference", Tata McGraw-Hill , 7th Edition, pp.177-180 .
2. Grady Booch, James Rambaugh.1998,"UnifiedModeling Language User Guide", Addison Wesley Publishing, chapter 8-31.

WEBSITES: **REFERRED URLS:**

www.android.com http://developer.android.com/index.html

www.google.com http://en.wikipedia.org/wiki/SQLite

REFERRED DOCTORS:

Doctor Prabhavathi Hospital-Eluru

Address: Powerpet, Eluru, Andhra Pradesh 534002

Phone.No: 088122 30935

Link:

https://www.google.com/url?sa=t&rct=j&q=&esrc=s&source=web&cd=2&cad=rja&uact=8&ved=2ahUKEwjgk5Sv0KnhAhWUe30KHa0RDusQFjABegQIAxAB&url=https%3A%2F%2Fwww.justdial.com%2FEluru%2FPrabhavathi-Hospital%2F9999P8812-8812-170926121247-J7K5_BZDET&usg=AOvVaw396gIIeYt4NT_RoFFrjDZy

GangaBhavani Hospital-Eluru

Address: Siddi Sai Skin & Diabetic Care Subbamma Devi High School Road R.R.Pet Eluru-534 002 West Godavari Dist., A.P.

Phone.No: 08812-234826

Products and Services: niisdrspages@gmail.com

Appointments: www.doctorspages.in

Link:

https://www.google.com/url?sa=t&rct=j&q=&esrc=s&source=web&cd=1&cad=rja&uact=8&ved=2ahUKEwim79GozanhAhXKXisKHWfdC4QQFjAAegQIABAB&url=http%3A%2F%2Fdoctorspages.in%2Flisting-view.php%3Fplink%3DDr- Ganga-Bhavani-V-MBBS-MD-DVL-Dermatologist-Venereologist- Cosmetologist-ELURU-Subbammadevi-School-Road-ICICI-Bank-line- RRPet&usg=AOvVaw0UXwvPXlVmXRFcwOzQ1wCq

NOTE:

According to **Dataminning** concept we are collecting number of samples(information) from doctors.We are consider majority doctors information so that we are place this information.

MEDICAL DIAGNOSIS SYSTEM

MR.GOPI, ASSOCIATE PROFESSOR, DEPARTMENT OF CSE

P.RAMYA, N.V.S.SNIGDHA , M.SAHITHI, T.KAMLISH

B.Tech Students , Department of Computer Science & Engineering, Ramachandra College of Engineering, Eluru, Andhra Pradesh, India.

ABSTRACT

The project Medical Expert System is a personal easy search option for mobile user. This Android based application provides Good User Interface to search options like. Information about diseases. The disease names based on symptoms and create awareness to the patients about medical expert system.

I. INTRODUCTION

One of the fastest growing industries now a day is mobile industry. There are many competitors in this area who are doing research and development on new platforms & user experience. One such technology is Android from Google which is supported for many manufactured phones. These phones are described as next Generation mobiles [As described by Google]. The project Medical Expert System is a personal easy search option for mobile user. This Android based application provides Good User Interface to search options like. Information about diseases,. The disease names based on symptoms and creates awareness to the patients about medical expert system..

II. SYSTEM MODEL AND ASSUMPTIONS

.

Architecture diagram is a diagram of a system, in which the principal parts or functions are represented by blocks connected by lines that show the relationships of the blocks. The block diagram is typically used for a higher level, less detailed description aimed more at understanding the overall concepts and less at understanding the details of implementation.

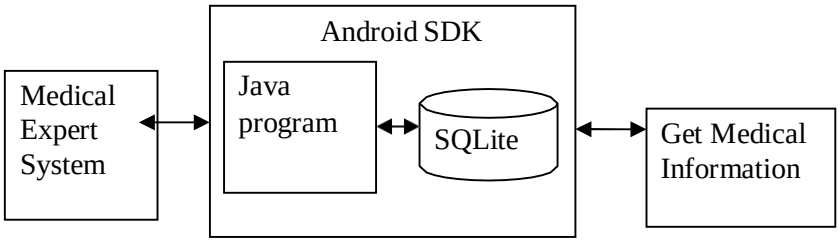

III. PROPOSED MODEL

- Patient need not go to the doctor for very small reason.
- Patients, medical practitioners can improve their knowledge about the diagnostics.
- It provides the diagnostic information based on the symptoms given by the user.
- It provides the information on care to be taken by the patient.
- It can be used by the Doctors (Medical practitioners) for effective diagnosis.
- Patients, caregivers, medical professionals can get the information quickly within less time.

IV. RESULT AND DISCUSSION

Medical diagnosis (abbreviated Dx[1] or D_S) is the process of determining which disease or condition explains a person's symptoms and signs. It is most often referred to as diagnosis with the medical context being implicit. The information required for diagnosis is typically collected from a history and examination of the person seeking medical care. Often, one or more diagnostic procedures, such as diagnostic tests, are also done during the process. Sometimes posthumous diagnosis is considered a kind of medical diagnosis.

Diagnosis is often challenging, because many signs and symptoms are nonspecific. For example, redness of the skin (erythematic), by itself, is a sign of many disorders and thus does not tell the healthcare professional what is wrong. Thus differential diagnosis, in which several possible explanations are compared and contrasted, must be performed. This involves the correlation of various pieces of information followed by the recognition and differentiation of patterns. Occasionally the process is made easy by a sign or symptom (or a group of several) that is path gnomonic.

Diagnosis is a major component of the procedure of a doctor's visit. From the point of view of statistics, the diagnostic procedure involves classification tests.

CONCLUSION

This application is used for getting Medical Expert System**.** This application is build in Google mobiles using Android SDK**.** It is a tool developed for android platform. The project Medical Expert System is a personal easy search option for mobile user. This Android based application provides Good User Interface to search options like. Information about diseases,. The disease names based on symptoms and creates awareness to the patients about medical expert system.

REFERENCES

1. . Herbert Schildt.2008 ,"Java Complete Reference", Tata McGraw-Hill , 7th Edition, pp.177-180 .
2. Grady Booch, James Rambaugh.1998,"UnifiedModeling Language User Guide", Addison Wesley Publishing, chapter 8-31.

WEBSITES:

www.android.com

www.google.com

REFERRED URLS:

http://developer.android.com/index.html

http://en.wikipedia.org/wiki/SQLite

Academic Year 2019-2020

Name of the Project: **A STUDY ON RECRUITMENT AND SELECTION WITH REFERENCE TO EAST INDIA COMMERCIAL COMPANY LTD, ELURU**

SL NO	COURSE NO	COURSE NAME	PAGE MAPPING
1	1	Primary Data	15
2	2	Secondary Data	15
3	3	Sample size	15
4	4	Factors influencing recruitment effort	39
5	5	Benefits of recruiting from outside	41
6	6	Types of Recruitment	43
7	7	Preference In Recruitment	48

1) Total Number of Domain subjects :***4***
2) Number of Subjects that include experiential learning through project work :***4***
3) Average:***3***

HOD
HEAD
Department of Management Studies
Ramachandra College of Engineering
VATLURU (V), Padapadu (M).
ELURU-534 007 W.G.Dt. A.P.

Academic-Coordinator (MBA)

PRINCIPAL
PRINCIPAL
Ramachandra College of Engineering
VATLUR (V), ELURU - 534 007
West Godavari District

A STUDY ON RECRUITMENT AND SELECTION
WITH REFERENCE TO
EAST INDIA COMMERCIAL COMPANY LTD, ELURU

(A project report Submitted to Jawaharlal Nehru Technological University, Kakinada in partial fulfillment of the Requirements for awarding the Degree)

IN

MASTER OF BUSINESS ADMINISTRATION

SUBMITTED BY

CHILLA RATNA KUMAR

REGD. NO: 18ME1E0018

UNDER THE ESTEEMED GUIDANCE OF

Dr. CH.SIVA KUMAR, MBA, Ph.D,

ASSOCIATE PROFESSOR

DEPARTMENT OF MANAGEMENT STUDIES

RAMACHANDRA COLLEGE OF ENGINEERING

(AFFILIATED TO JNTU, KAKINADA, APPROVED BY AICTE, NEW DELHI) NH-5, BY PASS ROAD, VATLURU (V), ELURU, W.G. DIST- A.P

2018 - 20

DECLARATION

I, hereby declare that, this project report titled – **A STUDY ON RECRUITMENT AND SELECTION WITH REFERENCE TO EAST INDIA COMMERCIAL COMPANY LTD, ELURU** is a bonafide work done and submitted to the **JNTU, KAKINADA, DEPARTMENT OF MANAGEMENT STUDIES, RAMACHANDRA COLLEGE OF ENGINEERING** is an original work carried out by me and is not submitted to any other purpose or published any time before. The information & findings of this report are based upon the information collected by me during the study period.

Place: ELURU
Date**:** **(CHILLA RATNA KUMAR)**

Regd. No: 18ME1E0018

College Code : ME

RAMACHANDRA
COLLEGE OF ENGINEERING

NH-5 Bypass Road, Vatluru(v), ELURU -534007, (A.P.)
(Approved by AICTE, New Delhi and Affiliated to JNT University, Kakinada)

CERTIFICATE

This is to certify that, the Project entitled **A STUDY ON RECRUITMENT AND SELECTION WITH REFERENCE TO EAST INDIA COMMERCIAL COMPANY LTD, ELURU** Submitted by **CHILLA RATNA KUMAR** as partial fulfillment of the requirements for awarding a Degree in **MASTER OF BUSINESS ADMINISTRATION,** from Jawaharlal Nehru Technological University, Kakinada, under the guidance and supervision of **Dr. CH.SIVA KUMAR, MBA, Ph.D,, ASSOCIATE PROFESSOR, DEPARTMENT OF MANAGEMENT STUDIES, RAMACHANDRA COLLEGE OF ENGINEERING, VATLURU, ELURU,** during the year **2018-2020.**

PROJECT GUIDE **HOD**

EXTERNAL EXAMINER

Ph: 08812-215 150, 152, Fax: 08812-234 128 email: rcee_elr@yahoo.com, website: rcee.ac.in

EAST INDIA COMMERCIAL COMPANY LIMITED
Unit : SRI KRISHNA JUTE MILLS, ELURU - 534002. A.P.
Tel : Mg. Dir: 0091-8812-226903 Dir:226907 Sales : 226904 Pur :252765
Fax 08812 – 237370/252846 e-mail : eicc@eicciltd.com

Date: 10/07/2019

CERTFICATE

This is to certify that the following personnel has successfully completed her project work in our Establishment.

Name of the student	: **CHILLA RATNA KUMAR**
Register / Roll Number	: **18ME1E0018**
Topic	: RECRUITMENT AND SELECTION
College	: Ramachandra College Of Engineering, Eluru.
Period	: **03/06/2019 TO 10/07/2019**
Cource	: M.B.A
Unit	: SRIKRISHNA JUTE MILLS, ELURU.

During the above period she has shown keep interest to do the job.
We wish her to success in all of her endeavors.
Thanking you,

for E.I.C.LTD

(M.V.Krishna Prasad)
PERSONNEL MANAGER

ACKNOWLEDGEMENT

It is inevitable that thoughts and ideas of other people drift into the subconscious when one feels to acknowledge the help derived from other.

I am grateful to **Dr. DOLA SANJAY.S, M.Tech, Ph.D**, **PRINCIPAL OF** Ramachandra College Of Engineering, Vatluru, Eluru. **Mrs. K. SRI DURGA, MBA, (Ph.D),** Head of the Department for Management Studies, for their blessings and encouragement throughout my course of study.

I express my sincere gratitude and thanks to **Dr. CH.SIVA KUMAR, MBA, Ph.D,, ASSOCIATE PROFESSOR,** and project guide, and the faculty members in Department of Management Studies, **RAMACHANDRA COLLEGE OF ENGINEERING, VATLURU, ELURU,** for their encouragement, continuous support and timely suggestions.

I take this opportunity to convey my sincere thanks to Sri. **MV. KRISHNA PRASAD,** Personnel Manager of **"EAST INDIA COMMERCIAL COMPANY LTD", ELURU** for giving me an opportunity in their Organization.

I express my thanks to my parents for giving me moral support and encouragement throughout my studies. I deeply appreciated one and all whose guidance has been given at every step and without whom this work would not be completed.

(CHILLA RATNA KUMAR)

CONTENTS

- **Title Page**
- **Declaration**
- **College Certificate**
- **Company Certificate**
- **Acknowledgement**

CHAPTER-1

Introduction 08-13

CHAPTER-2

Industry Profile 15-25

CHAPTER-3

Company Profile 27-34

CHAPTER-4

Theoretical Frame Work 36-49

CHAPTER-5

Analysis and Interpretation 51-66

CHAPTER-6

Findings and Suggestions 68-71

APPENDIX

Bibliography 72

CHAPTER - 1

INTRODUCTION

India is a land enriched with an abundant supply of human resources. One of the major impacts on production is the human sector. It has been recognized as a principal instrument in the fulfillment of the targets of the plan and in the achievement of the economic progress generally. Hence it is more the welfare of the employees and to prevent the main problems.

An organization whether small or large, be it a business or an industrial enterprise, needs for its growth, survival and continuance 4 important M's are

- Money
- Material
- Machinery and
- Men

No two persons are similar in their mental abilities, traditions, sentiments and behavior and are subject to many and varied influences, people are responsive, they feel, think and act and therefore they just cannot be operated like a machine or shifted and altered like a template in a room layout.

Human beings differ from one another in basic mental abilities, personality, interests, skills, attitudes, aspirations, energy, education, training, experience and behavior. In the words of an expert, the wonder of wonders in man who create, to invent, to respect and to hate and also to destroy.

NEED FOR STUDY

The need for study on the process of recruitment & selection is to improve the knowledge the Recruitment and Selection practices are to be followed in the organization and also to improve the communication skills and acquaint with latest trends in view of the study. It draft the report by collecting facts and figures of the organization

.

Recruiters uses many sources to understand the best source to identify the right candidate so that arises need to understand the best source to be opted for maximum efficiency and to maximize productivity. The need of the project is to analyze and find the factors with satisfy the needs and wants of various clients organizations .This study deals with the topic “recruitment selection’ In the organizations and kind of different selection procedures being followed in selection of an individual in to the organization.

SCOPE OF STUDY

The study confined to SRI KRISHNA JUTEMILL, ELURU. The study aims to know the impact of recruiting and selection processes on the training and development, performance appraisal and retention practices to know the factors, which are connected with, recruit the employees.

OBJECTIVES OF STUDY

The following are the objectives of the Study:

Primary objective

- To study the Process of Recruitment & Selection at SRI KRISHNA JUTEMILL,ELURU.

Secondary objectives

- To study and analyze the Recruitment and Selection Process of SRI KRISHNA JUTE MILL.
- To study and analyze the HR polices of SRI KRISHNA JUTE MILL Company.
- To understand various Recruitment and Selection strategies of SRI KRISHNA JUTE MILL, which fulfill the needs and wants of employees.
- To identify the different types of problems of employees in HR department of SRI KRISHNA JUTE MILL.
- To know about the organizational profile of SRI KRISHNA JUTE MILL with special focus of HR department.
- To appraise the executive department programs in the organization.

RESEARCH METHODOLOGY

Source of data is both primary and secondary data were gathered and utilized for the study of Recruitment and Selection.

Primary Data:- **course 1**

Data collected from employees through Questionnaires, Interviews and discussion with staff.

Secondary Data:- **course 2**

The data includes information obtains from the annual reports, circulars, journals, information brochures and other literature of the company.

Sample size: **course 3**

The sample is taken from whole population in the organization

The sample size is **54** members

LIMITATIONS OF THE STUDY

- Unable to obtain the proper feedback because the limited time period and busy schedule of the employees
- Unavailability of information on Recruitment & Selection at different levels in the organization.
- Unable to interact with all the employees
- Limitation as to administration of specific questionnaire.

CHAPTER - 2

JUTE INDUSTRY

The jute textile industry occupies an important place in the national economy. It is one of the major industries in the eastern region, particularly in west Bengal. It supports nearly 4 million farm families, besides providing direct employment to about 2.6 lakh industrial workers and livelihood to another 1.4 lakh persons in the tertiary sector and allied activities Capacity utilization of the industry is around 75 percent. The jute industry is labor intensive and as such its labor output ratio is also very high in spite of various difficulties being faced by the industry.

As on December 1, 2006, there are 77 composite jute mills in India, of which 60 jute mills are located in West Bengal, 3 each in Bihar and U.P., 7 in Andhra Pradesh and 1 each in Assam, Orissa, Tripura and Chattisgarh. Ownership- wise division is 6 mills are under Government of India, 1 mill (Tripura) is under State Government, 2 mills (Assam& New Central) are in the co-operative sector, and 68 are in private sector. The total number of looms installed in jute industry stood at 46,328 consisting of 24,261 Hessian looms, 20,159 sacking looms, 1,099 CBC looms and others at 809. The installed spindles in jute mills, other than 100% export oriented units, were 6,95,006 comprising of 5,96,266 fine spindles and 98,740 coarse spindles. As on December 1, 2006, installed spindles in 100% export oriented units stood at 12, 192, with fine spindles at 9,712 and coarse spindles at 2,480.

BRIEF HISTORY OF THE JUTE INDUSTRY IN INDIA:

Long before the establishment of the British Empire in India the raw Jute was produced and used by the Indian villagers for making ropes, cordage, and coarse fabrics for matting and bedding. The first jute mill was established on the banks of the Hubli River at Rishra near Calcutta in 1854 by George Auckland and by Sumbnersen and was named Wellington jute mill (New called chandanyh jute mills). In another two years the second jute mill called Baranagose jute mills was set up by Borme Jute Company. Three years later the first power driven weaving factory was set up. By 1884, 5 mills started working along with the banks of river Hubli with the total loom age of 950. By 1885 no of mills swelled 24 with 670 looms.

By 1909, 38 companies controlling 30, 685 looms were framed in India. When the Indian sub-continent was partitioned majority of jute went with the Pakistan and India jute mill found it very difficult to obtain under jute cultivation and by 1958 the raw jute under

jute produced in India was enough to meet the requirements of the jute mills. The jute industry also later began to diversity production by installing broad looms and producing carpet backing. Mills also experimented upon small quantities off laminated bags dyed fabrics felts etc. India accounts for about 45% of worlds total loom age. Its production is about 12 lakh tones per annum. Bangladesh the next country to produced jute goods accounts for about 23% of world's loom age. Its production is about 6 lakh tones per annum. As on December1, 2006 there are 77 Jute mills running in India.

CONSTITUTION OF JUTE INDUSTRY IN ANDHRA PRADESH:

The jute industry is long-standing labor-intensive industry in coastal Andhra. The jute industry in Andhra Pradesh comprises of two segments. They are Composite jute mills will convert raw material into yarn and there form produce fabric and bags and Yarn and twine mills, will produce only jute yarn and twine from raw jute. The following are the composite mills in Andhra Pradesh and their products.

TABLE-2.1

Name of the mill	**Estimated Yearly Production (Million Tones)**
Chittavasla jute mills	30000
Sri Krishna jute mills, Eluru	30000
Nellimerla jute mills limited, Nellimerla	30000
Sri Bajrang jute mills limited, Guntur	15000
Hoogly mills project limited, Vizianagaram	10000

Source:www.eiccltd.com

The above are long established jute mills employing nearly 22000 workers and paying very high wages. All the five mills were set up during 1900's taking advantage of abundant availability of Bimlimesta. But Bimlimesta is suitable for manufacture of coarse

goods like sacking bags; the mills were set up to manufacture only sucking bags suitable for packaging of food grains, sugar, cement etc. Chittavasla jute mills, however is producing a small quantity of Hessian at present. There are now 18 jute twine manufacturing unite in Andhra Pradesh most of which are stated in Bimlimesta growing in Srikakulam and Vizianagaram districts. A few more twine units are in the process of being setup. The present production of the existing twine units is about 75000 to 80000 tonnes per year.

The jute industry in Andhra Pradesh has tremendously grown during the last one decade; particularly during 90's about 90% of the entire country's requirements of jute yarn is now set by Andhra Pradesh. The three most important factors that caused the phenomenal growth in the state are: Availability of Bimlimesta, which is eminently suitable for production of coarse twine, which is the basic product of all Andhra Pradesh, twines units and the low cost of production resulting form very low wages compared to composite jute mills resulting in consistently high profits.

JUTE: THE GOLDEN FIBER

Jute is a natural, long and soft vegetable fiber with golden silky shine, also termed as "The Golden Fiber". It can be spun into coarse and strong threads. This fabric is also known as Hessian and burlap. The very fine threads of jute can be separated out and made into an imitation silk. A fiber obtained from the bast layer of the plants Corchorus capsularis and Corchorus olitorius primarily used for gunny sacks, bags, cordage, and binding threads in carpets and rugs. Softer than coir, jute can be spun into fine yarns or heavy cords and is ideal for patterned rugs. Common Jute Fiber names are Pat, Kosta, Nalita, Bimli and Mesta. Types of Jute are capsularis (white) and olitorius (tossa). The capsularis fiber is whitish in color and olitorius fiber is finer and stronger than the capsular is and is yellowish reddish, grayish in color. Capsularis is normally sown between February to May while olitorius is sown between April mid Jun.

Characteristics

- Widely acknowledged as Golden fiber
- Cheapest fiber obtained from skin or bast of plant's stem
- High tensile strength and low extensibility
- Vastly used as raw material in packaging, textiles, non-textile, construction and agricultural applications

- High insulating and anti static properties

JUTE COMMODITIES

Jute has always been known as an eco friendly, economical, versatile, bio degradable and recyclable vegetable fiber. There is a great innovation in the fashion world with jute fabric finding its place there. Right from packing material, bags to highly fashionable and glamorous garments, jute fabric has undergone a splendid evolution. Now, shifting towards social circles, jute has also created its interest and usage in both domestic as well as international arena. India is one of the largest producers of jute in the world. The most basic and essential jute commodities fabricated in Indian jute mills are:

Canvas: It is the finest jute item, woven with highly premium grades of fiber. Jute canvas and screen lamination along with paper polythene is widely used in mines and for getting protection against weather.

Sacking Cloth: Made up of low quality jute fibers, sacking cloth is loosely woven heavy cloth used for packing sugar, food grains, cement etc. Weighing from 15 to 20 ozs, several qualities are available in this options like Twill, hy Cees, D.W Flocer, Cement Bags and many more.

Hessian Cloth: It is a plain-woven superior quality jute fabric, weighing between 5 and 12 ozs, a yard. Hessian cloth is highly exported all across the world in the form of cloth, bags etc. Also known as burlap, this cloth is vastly used in wide ambit of applications.

D.W. Tarpaulin: This product is majorly used for coverings on a very high multi dimensional scale.

Bags: Used mainly for shopping, bags are usually fabricated from sacking or Hessian cloths. They are often decorated with varied artistic designs and with straps, chains and handles in several dimensions and shapes.

Geotextile: It is a jute cloth lay along the river embankment sides and hill slopes to prevent soil erosion and landslides.

Hydrocarbon free jute cloth: This cloth is fabricated by treating jute with vegetable oil. It is a Hessian fabric, hydrocarbon free cloth, widely used for packing different food materials, cocoa, coffee, peanut beans etc.

Serim Cloth: It is a lightweight Hessian cloth, used in felt industry for reinforcing the non-woven fabric and for strengthening paper with lamination.

Tobacco sheets: Used for wrapping tobacco leaves, tobacco sheets are made up of Hessian cloth.

Decorative items: The vast variety of decorative products are made up of jute fabrics like wall hangings, toys, table lamps, paper, decorative bags, furniture and many more.

Hessian tapes and gaps: They are made up with Hessian cloth, woven with gaps at regular intervals and the cloths cut between the gaps to make small width taps.

JUTE GROWING AREAS

Jute thrives best in damp heat and the climatic condition as prevalent in west Bengal is well suited for its cultivation. Indian states ideally suitable for cultivation of jute are west Bengal, Bihar, Assam, Orissa, Uttar Pradesh

JUTE HANDICRAFTS

Jute handicrafts of India have created a niche the world over. A wide range of skills have been honed to perfection by craftsmen who have learned to transform this natural fiber into products of daily use, with an aesthetic appeal .West Bengal is the largest Jute producing state in the country accounting for 71% of the production. The states of Bihar and Assam rank second and third respectively. As a natural fiber, it has many advantages over synthetics.

A luxurious range of jute home decor products is available to suite different life styles. Cushion covers, tablemats, table covers, tea cozies add a touch of class to the interiors. Exquisite jute floor coverings are till date unmatched in their elegance. Jute garments are available for all occasions, in hand printed, embroidered and tie and dyed variety. A wide range of the most endearing stuffed toys is made of jute woven fabrics. These are washable and safe for children to play with. Christmas gifts and decorative items with colorful embroidery look absolutely attractive when made with jute.

GEOJUTE-THEECO-FRIENDLYFIBER

One of the oldest industries in India, Jute has traditionally been used for packaging. However, its versatility is only coming to light now as the world looks on for natural optionss to save the environment. The time has come for this natural fiber to take over with the ideal solutions for the modern world. Geo-textiles come in two varieties: woven and non-woven fabrics. Features are High moisture absorption, capacity Flexibility, Drainage properties. Geo Jute finds applications in Erosion control, Separation, filtration and drainage in civil engineering works agricultural uses.

RECENT APPLICATIONS: JUTE AS FASHION GARMENT

One of the fashion show focused jute as a fashion connoisseur exporters and traders. This show has displayed vast collection of jute clothes for both men and women. Many buyers, individuals and boutiques acknowledged the jute fabrics, texture and prints. Currently, the Ministry of textiles advertises an exhibition to feature the jute garments and other commodities. Some high profile designers like Mumbai's Pawan Aswan and Ashis Sony have highlighted jute on several fashion shows like at the Lakme India Fashion week 2000 and International Fairs in Düsseldorf, Germany.

The latest trend in fashion is today focused on ethnic styles with complete range of jute accessories like jewelry, scarves, bags, ties, belts and many more. Also, NIFT has taken participation in fashion shows having association with the Institute of Jute Technology and India's premiere natural fabrics store located in Mumbai, patronizing jute creation to a large and high extent. The biggest asset of Jute is its natural golden color and high tensile strength.

PRODUCTION OF JUTE GOODS

During 2006-07 (April-March), total production of jute goods was at 1356.30 thousand M.T.During 2007-08 (up to Oct., 2007), production of jute goods is 1024.1 thousand M.T. as against 869.3 thousand M.T. during the corresponding period of 2006-07.

EXPORTS

During 2006-2007(April – march'07), the, export, which was RS.10, 552 Million equivalent to about US $ 241 million, in terms of quantity, exporting during 2006 –2007 was to the tune of 2.42,800 M.Ton. Export of yarn has shown an upward trend by 13% in quantity and 14% in value terms as compared to corresponding period of previous year. Similarly, sacking also has shown an increasing trend by 4% in value terms during 2006-2007 as compared to 2005-06.on the basis of dispatches of jute goods for exports, based on returns of jute mills, export s of jute goods during 2007-2008(up to November, 2007), have been estimated at 1,42,000 M.T valued at Rs.7755 million equivalent to about US $197 millions, Egypt, Belgium, Turkey and Syria had been the five major importing countries for Indian jute goods which accounted for of 46% of total exports of the jute goods in the value terms .the major exportable items of Indian jute goods are Hessian ,sacking, yarn of traditional products, floor coverings and Hand & shopping bags in the diversified jute products(JDP)sub sector. Recently food grade jute cloth and bags (FGJP) and jute geo textiles (soil saver) have emerged as the other potential exportable jute items.

USA, UK, South Africa and Belgium are the main importers of Indian jute in the world. They import 25% of the total India's production of jute. India has excellent infrastructure facilities in meeting foreign (export) commitments. Apart from India, other countries like Bangladesh, China, and Myanmar are other important exporters of jute. As a matter of fact, the total production of jute in the world is 3 million tones (roughly around 24-25K Rs. Crore).

THE VERSATILE OPTIONS:

Rapid expansion of into a wide range of life style consumer products has been made possible due to the versatility of the jute spinning of high quality yarns and weaving of light weight fine textured fabrics of uniform structure in exotic colors and designs are made in both jute factories and hand loom sectors. With vastly improved bleaching, dyeing and

finishing processes and by blending jute with other natural and synthetic fibers the finished jute products now ensure fee; lustert, abrasion resistance and aesthetic appeal.

Given below are some facts about production and consumption of Jute in the World and in India

TABLE-2.2

PRODUCTION OF JUTE GOODS **QTY: IN 000' M.T. VALUE : Rs / Crores**						
(APRIL / MARCH)	**HESSIAN**	**SACKING**	**CBC**	**OTHERS**	**TOTAL**	**CORRESPONDING CONSUMPTION OF RAW JUTE IN '000 BALES**
1995 – 96	413.9	676.3	30.5	5312.3	1433	8290
1996 – 97	368.7	666.6	25.2	340.4	1400.9	8023
1997 – 98	392.4	864.6	19.8	401.6	1678.4	9598
1998 – 99	344.1	903.3	18.5	330.3	1596.2	9068
1999 – 00	344.5	909.2	8	328.5	1590.2	9087
2000 – 01	337.9	952.9	6.6	327.5	1624.9	9280
2001 – 02	275.3	1034.3	5	286.2	1600.8	9142
2002 – 03	338.3	1000	5.4	278.1	1621.8	9262
2003 – 04	305.2	979.3	5.7	281.1	1571.3	

Source: Annual reports

TABLE-2.3

CONSUMPTION OF RAW JUTE QTY: IN lakh bales							
CARRYOVER	27	22	10.5	7	16	34	33
PRODUCTION	83	78	90	105	110	90	85
IMPORT	9	8	4	4	9	7	7
TOTAL SUPPLY	119	108	104.5	116	135	131	125
DOMESTIC CONSUMPTION	7	7	7	8	8	8	8
MILL CONSUMPTION	90	90.5	90.5	92	93	90	90
TOTAL DEMAND	97	97.5	97.5	100	101	98	98
CARRY OVER	22	10.5	7	16	34	33	27

Source: Annual reports

CHANGING TREND:

Jute can be exemplified as a golden natural fiber with versatile application aspects ranging from low value geo textiles to high value carpet, apparel, composites, upholstery furnishings, decorative color boards, fancy non-woven for new products and many more. Due to its unique versatility and long lasting nature, jute is regarded as the **Fiber for the Future.** In coming era, variety of mini jute plants and jute mills will be seen engaged in the production of jute and jute blended yarns. These yarns are very light weighted and are used in varied applications like in upholstery, furnishing, garments, bags etc.

The jute sector occupies ban important place in the Indian economy in general and the eastern region in particular, the jute industry provides direct employment to about 0.26 million workers and supports the lively hood of around 4.0 million farm, families.

For this mission the government approved a sum of Rs355.55 crores. The government also approved allocation for the mini mission –1 and mini mission –2 under the JTM for the remaining year of X Plan i.e., 2006-07 at Rs 2.46crore and 9.75 crores subject

to the condition that the ministry of agriculture and department of expenditure will find the savings from the existing allocation of ministry of agriculture.

The allocations for mini mission –3 and mini mission –4 for the remaining year of the X plan at Rs7.95 crore and Rs30.85 crore respectively have been approved which will be funded from the plan savings of ministry of textiles.

The government has included the jute sector for special attention in its National Common Minimum Programme.

Keeping in view its growing contribution to the economy the government of India has started the jute technology mission. This will benefit jute growers the workers engaged in the jute industry, jute entrepreneur and others employed in associate activities in the jute sector. It will help to modernize the jute industry and enable the country to reap the benefits of enhanced levels of jute diversification.

INDUSTRY MILESTONES:

- The largest producer of raw jute in the world
- The biggest manufacturer of jute goods in the world
- The capacity to manufacture the widest range of products tailored to the customer requirements.
- Comprehensive and world class research and development facilities in the area of jute agriculture product development facilities in the area of agriculture product development and machinery design
- High quality conscious employing most modern facilities for TQC
- Export history of raw jute and jute manufactures dates back to over 100 years
- Highly developed infrastructure like ports, shipping facilities etc
- A vibrant jute industry oriented to provide maximum customer satisfaction
- Indian jute industry has the capacity to produce and meet the International demand for food grade jute bags and cloth
- Food grade jute bags and cloth manufactured in India are a boon in the context of global environmental and ecological concern.
- Indian food grade jute bags have a twin edged advantage: preservation of the food in the most natural way.

CHAPTER - 3

EAST INDIA COMMERCIAL COMPANY LIMITED

EICCL is a public limited company incorporated on 3-2-1941. Its registered office is situated at no.1 old courthouse corner, Calcutta-700001. Initially the company was carrying on trading activity from 1-1-1945. It managed on lease a jute mill at Eluru in Andhra Pradesh, which was owned, by Sri Krishna Jute Mills Limited, was amalgamated with EICCL.

East India Commercial Co. Ltd., a public limited company was promoted by the Bharatia family of Kolkata. Four generations of Bharatia, starting with late Dedraj Bharatia further succeeded by his grand son late Bishwanath Bharatia. Now his great grand sons and representatives of fourth generation Mr. Alok and Deepak Bharatia are at the helm. Initially the company is carrying on trading activity and from 1945 it went into manufacturing of jute products. It now has in its stable three jute unit's namely-1. Sri Krishna Jute Mills situated at Eluru-534002, in A.P., INDIA.2. Sri Bajrang jute mills ltd situated at Guntur, A.P, India, 3. Krishna Hessians situated at Kotturu, near Eluru, A.P, India. Collectively these mills are known as EAST INDIA GROUP.

EAST INDIA group is a premier manufacturer of jute goods in India with an installed capacity of about 80000M.T. and annual production of 60000M.T. the combined turnover of the group is Rs 160 crores. The Company employs 10000 workmen in its jute manufacturing units. Sri Krishna jute mills and Sri Bajrang jute mills manufactured jute bags for packing of food grains; sugar and a small quantity of jute twine and yarn, which are mostly sold in the domestic market in India.

Krishna Hessians is a large new jute mill set up in 1999 with the most modern infrastructure and machinery. It includes shuttle less looms of sulzer and dorniar make and is manufacturing Hessian fabrics in several constructions for different applications. Hessian bags and diversified jute products including leno, scrim, webbing, union fabrics and various types of yarns and twines are manufactured for domestic as well as export market. The company has also started manufacturing bleached, dyed yarns and fabrics and also laminated fabrics in its very modern bleaching, dyeing and lamination plant which are recently set up. The unit specializes in producing high value added products to meet customer's specific requirements. The group enjoys a strong reputation as reliable manufacturer and supplier of

quality jute goods allover the country more particularly in South India, where most of its products are marketed.

Property division comprising of multi stored commercial building at NO-20, British India at Calcutta that is rented for office/business purposes and another property at Delhi, which is also rented out. The Board of Directors of EICCL Comprise of the following:-

- Sri Alok Bharatia, Chairman.
- Sri Brij Gopal Lunani, Managing Director.
- Sri Deepak Bharatia.
- Sri Sanjay Kumar Kanoria.
- Sri B.Shyam Sukha.
- Sri Manohar Gopal Lunani.
- Smt. Alpana Bharatia.

Sri Alok Bharatia, B.Com is a chairman of east India commercial company limited and has 20 years of experience in managing Jute Mills, Engineering Industries (Tungsten carbide manufacturers) and real estates. His younger brother, Sri Deepak Bharatia, B.Sc (Elec Engineering), Pitts burgh, is a director of the company and is actively engaged in the managing companies, viz,EICCL, Calcutta (Jute goods manufacturers and real estate owners)Indicarb limited, Bangalore (manufacturers of tungsten carbide)Sri Bajrang Jute Mills Limited (SBJML) Guntur (this company has come under management of EICCL in October 1994 under the B.I.F.R, sanction rehabilitation scheme).

East India Commercial Limited is professionally managed by a team of senior and dedicated professionals lead by its managing director; Sri Brij Gopal Lunani, M.Com, who is based at Eluru and managing the jute production. Functions of the Jute Mill from 1941, Sri B.Shyam Sukha, director is who is with company since 1986 is managing the property division and looking after general administration at the registered office Kolkata and Sri G.Ramakrishna, F.C.A, F.I.C.W.A and F.C.S who is the secretary and general manager (finance) of the company and several other qualified professionals. The Jute units of EICCL at Eluru along with Group Company under same management, namely, Sri Bajrang Jute Mills Limited (SBJML) AT Guntur are producing nearly 45,000 M.T. per year of sacking and Hessian and jute yarn and twine.

The companies are not involved in export business up to now. But with the above background of experience in Jute goods manufacturer, EICCL is now setting up the EOU named as: “Krishna Hessians (EOU)” for the purpose of manufacturing export quality jute yarns and twines. This EOU is being set-up on the same premises at their existing jute Hessian manufacturing unit called “Krishna Hessians”, which is located at Kotturu village near Eluru. The company in course of time is also strategically planning to go for higher value added products in their EOU.

Due to more and more and high speed carpet making machinery coming into use, importers of jute are demanding superior yarns/twins than what are being produced. Manufactures that are able to produce yarns, which are confirming to superior parameters of quality, are able to products at a premium price. The EOU at Eluru promoted by EICCL is aimed at production of such high quality yarns.

EICCL has built a market for its existing products and enjoys much reputation for quality and reliability. With its vast experience the company does not except any difficulty in manufacturing and export marketing of yarn and twine. The chairman of the company namely, Sri Alok Bharatia has made several visits to Europe and has built Belgium, Poland and Brazil during September, 1998, again Turkey, Egypt in August, 1999, to study the export potential of jute products, including yarn/twine and has established business contacts for marketing jute yarn/twine. The company their production of Jute Yarn/Twine. Sri Krishna jute mill was established in early 30’s in Eluru. At that time Eluru was like a village but today it was entirely different this organization disburses in a season about Rs 6000 lakh to jute growth as located within a radius of about 40 kms. The wards of many grocers also get gainful employment in jute mill.

Late Sri Mothy Ganga raju, the founder of the company could think much ahead of his times. And visualized the need for encouraging agro based industries while working as director of industries, Madras State. He encouraged and entrusted the riots of different places of A.P, take to jute cultivation and to start jute mills in the cooperative sector. His dream was realized with the establishment of a cooperative jute mill of 8000 tons of capacity in 1904 at Eluru. The jute mills development would be “growth with a purpose”. This has been philosophy behind the late Sri Mothey Gangaraju thinking. In 1941, the Management was changed. Sri Briz Gopal Lunani have been handed the company.

OBJECTIVES OF THE COMPANY

- The objectives of the organization are displayed at various points in the factory to make workers aware of their objectives.
- To be a market leader in the field of jute products.
- They want to see the growth of the organization by reviving its profits.
- Maintaining the quality of the goods.
- Satisfying employee needs and wants
- Maintaining good relations with the customers and suppliers
- Satisfying customer needs and wants.

HUMAN RESOURCE MANAGEMENT PHILOSOPHY AND POLICY:

In Sri Krishna jute mill, the philosophy and policy and of HRM is formulated every year as per the organizational climate and situational requirements they don't follow particular philosophy because they believe that the requirements and dimensions of HRM are variable and not constant. So every year they frame new philosophy and policy, which can meet the present HRM needs. In 2008 their philosophy is to exercise the philosophy of social approach of HRM and their policy is to solve problems of the workers and right sizing of human resource. This is entirely unique practice of HRM, which we cannot find anywhere else.

HRD IN SRI KRISHNA JUTE MILL:

As the procedure in the production part does not require specialized skills here workers are unskilled and uneducated and the requirements of HRD programs are not hat much important over here. Even they have better HRD policies when compared to other jute mills. They develop human resource by preparing work knowledge training.

HRD POLICY OF THE ORGANISATION:

Sri Krishna jute mill follows general training programs required for the development of human resources. And frame the needs and requirements of training of workers and make decisions regarding training programs and HRD.

CHART-2.1

STRUCTURE OF HRD DEPATRMENT:

General manger

↓

Officers

↓

Super visors

↓

Clerical staff

Source: www.eiccltd.com

The structure of HR department is same as other departments in the organization.

PERSONNEL DEPARTMENT:

This plays a vital role in the organization. This department discharges both the managerial and operative functions. Besides this all statutory and non-statutory welfare, the department sees provisions, social security and safety provisions

CHART-2.2

STRUCTURE OF THE PERSONNEL DEPARMENT

Managing Director

↓

Director

↓

Personnel manager

↓

Chief welfare officer

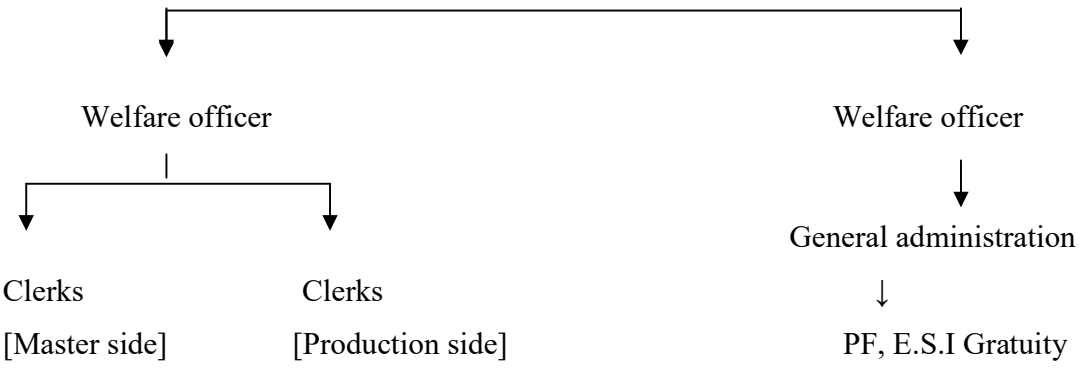

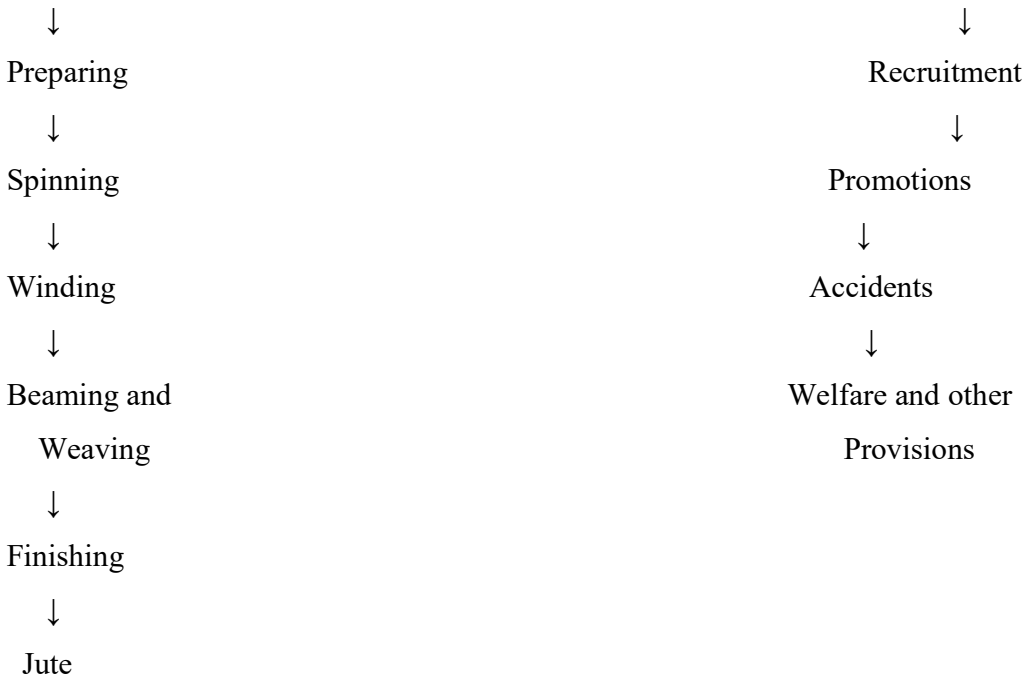

Source: www.eiccltd.com

THE ORGANIZATIONAL STRUCTURE:

The organizational structure of the Sri Krishna Jute Mills Limited consists of 3 Levels. They are

- Top Level Management
- Middle Level Management
- Lower Level Management

Top Level Management

The numbers of top level management includes Managing Director and next to be is Executive Director. They are under top-level Management

Middle Level Management

It consists of all departmental Heads of Organization that is from Personnel Department, Finance Department, Quality control Department, and Production Department Etc.

Lower Level Management

It includes the remaining persons who either belong to administration or company all are considered under lower level management namely Assistant Mechanics, Office Assistants, Office Attainders, Security Guards, Cleaners, Security Superintendents etc.

PRODUCTION

This department is the largest department in the organization. It consists of the sub departments, which are holding various processes to be performed on the manufacturing jute bags, Spinning, Winding, Weaving, Beaming and Finishing are the various sub departments.

CHART-2.3

MANUFACTURING PROCESS

Raw Jute → Goes down

↓ ↑

Emulsion → Finishing

↓ ↑

Softness → Weaving

↓ ↑

Batching → Beaming

↓ ↑

Breakers → Winding

↓ ↑

Finished goods → Twisting

↓ ↑

Drawing → Spinning → Yarning

Source: www.eiccltd.com

CHAPTER - 4

RECRUITMENT AND SELECTION

RECRUITMENT:

Successful human resource planning should identify the human resource needs. Once these needs are known, some action has to be taken to meet those needs. Therefore the next step in the acquisition functions of the recruitment. This activity makes it possible to acquire the number and types of people necessary to ensure the continued operations of the organization.

The idea recruitment effort will bring in a large number of qualified applicants who is willing to take the job if it offered. It should also provide information so that unqualified applicants can self-select themselves out of the job candidacy. That is a good recruitment program should attract the qualified candidates and not attract unqualified. This dual objective will minimize the cost of processing unqualified candidates.

Recruitment is the discovering of potential applicants or actual or anticipated organizational vacancies. In other words it is a linking activity bringing together those with jobs and those seeking jobs.

Recruitment is defined as a process of discovering the sources of manpower to meet the recruitments of the staffing schedule and to employ effective measures for attracting the manpower in adequate numbers to facilitate effective selection of an efficient work-force. The process of searching for prospective employees and stimulating them to apply for jobs in the organization is known as Recruitment.

Recruitment is a process concerned with identification of sources from where the personal can be employed and motivated to offer them for employment.

Werther and Davis defined recruitment as a process of finding and attracting capable applicants for employment. The process beings when recruiters are sought and end when their applicants are submitted. The result is a pool of applicants from which new employees are selected.

Lord has defined recruitment in terms of its competitive nature. He views that recruitment is a form of competition. Just as corporation competes to develop, manufacture and market the best product or service, they must also compete to identify, attract and hire the qualified people. Recruitment is a big business. Recruitment process is concerned with identification of possible sources of human resource supply and tapping those sources.

Once the required number and kind of human resources are determined, the management has to find the place where the required human resources are available and also the means of attracting them towards the organization. This process is generally known as Recruitment.

We live in a talented economy. Competition for best candidates is very severe. So to attract and retain the best talent, the recruiters have to think about the talent market as any other competitive market. Specialization and niche strategies are required. Job offers must therefore be customized for individual candidates.

The primary purpose of recruitment process is to achieve the desire of picking the right person for the job. This sounds obvious and seems as if it should be easy. If only this were so, the process is lengthy, complex and presents as many opportunities for making the right one. Research has shown that the best selection method has a predictive validity coefficient of 0.6 i.e. the best selection method has an excellent chance of predicting that an individual candidates subsequent performance will match the criteria. This means that here is also wrong chance that appointee will not achieve the desired standard

Purpose and Importance of Recruitment

- If the process of recruitment is carried out successfully, the following purposes are served.
- Looking at recruitment from an angle of potential candidates it is the process through which they come to now about the company and the natural of the jobs that are being offered .Therefore recruitment represents the first contact that a company makes with the personal having the potential to be employed.
- Recruitment determines the present and future human resource requirements of the organization in combination with human resource planning activities and job analysis activities.
- It helps increasing the pool of potential personnel thereby giving the
- Organization a number of optionss to choose from.
- It helps in evaluation of the effectiveness of various techniques and sources that aid recruitment.
- It helps in meeting the legal and social obligations of the organization with respect to the composition of its workforce.

Objectives of Recruitment

- To induct outsiders with a new perspective to lead the company
- To infuse fresh blood at all levels of organization
- To search for talent globally and not just within company
- To devise methods for assessing psychological traits
- To search for headhunt people whose skill fit the company values
- To anticipate and find people for positions that does not exist
- To attract people with multidimensional skills and experiences that suites the present and future organizational strategies.

Factors influencing recruitment effort course 1

While all the organizations engage in recruiting activity, some do so too much larger extent than others. Some of the factors influencing the recruitment effort are

Internal Factors

- Company pay package
- Quality of work life
- Organizational culture
- Career planning and growth
- Company products and services
- Geographical spread of company's operations
- Company growth rate
- Role of trade unions
- Cost of recruitment
- Company's name and fame

External Factors

- Socio-Economic factors
- Supply and demand factors
- Employment rate
- Labor market conditions
- Society
- Government

- Culture and other aspects of the society

Modern Sources and Techniques of Recruitment

- Walk in
- Consulting -Directly approaching the organization and consulting with appropriate authority
- Business alliances -mergers and acquisition
- Head hunting - search for an efficient person who be able to manage the organization
- Tele- recruiting-employment
- Body shaping - it is found mostly in software companies and
- professional organizations that train people and develop bodies to suit people for the jobs

Factors affecting recruitment policy and program:

External Factors:

- **Nature and competition for human resources**: it determines the organization approach towards its recruitment program to a great extent.
- **Legal factors**: there are various other legal provisions that affect the recruitment policy of the organization. Various acts which provide restrictions to free recruitment are child labor (prohibition and regulation) act 1986, employment exchange (compulsory notification of vacancies) act 1959, the factories act 1948 and the mines act 1952
- **Socio cultural factors**: various cultural factors affect the extent to which the organization can recruit certain categories of personnel for certain jobs,
- **External influences**: pressures may be from political structure in the form of emphasis of sons of soil or pressures for appointing certain individuals, pressures from the community to which the promoters of an organization belong, pressures from business contacts.

Internal Factors:

- **Organizational image**: The organizational image as perceived by the prospective candidate is an important factor for attracting personal for selection. The image of

the organization in a human resource market depends on its human resource management practices like facilities for training and development promotional avenues, compensation and incentives and work culture

- **Size of the organization**: It determines the degree of attractiveness to the prospective candidate. A small organization cannot have the same recruitment practices that an organization may have. It may not be able to attract highly talented personal.
- **Type of personal to be recruited**: Recruitment program and identification of sources for prospective candidates depends on type of the personal to be recruited.

Benefits of recruiting from outside: course 2

- Fresh viewpoints
- The employ possess varied and broader experience
- The employees develop the ability to change old habits

Benefits of recruiting from within:

- The valuable contacts with major suppliers are kept
- It builds loyalty among the employee
- It ensures stability from continuity of employment
- It creates a sense of security among the employees
- The valuable relationships with existing major customers is materialized
- Enhance the general morale of the company's employees

External source of recruitment:

- Advertising
- Employment agencies
- Employee references
- Campus recruitments
- Labor unions
- Nepotism
- Leasing
- Casual applicants

Job Description :

A job description describes the major areas of an employee's job or position. A good job description begins with a careful analysis of the important facts about a job, such as the individual tasks involved, the method used to complete the tasks, the purpose and responsibilities of the job, the relationship pf the job to other jobs, and the qualifications needed for the job. It's important to make a job description practical by keeping it dynamic, functional, and current. Don't get struck with an inflexible job description.A poor job description will keep you and your employees from trying anything new and learning how to perform their job more productively. A well-written, practical job description will help you avoid hearing a refusal to carry out a relevant assignment because "it isn't in my job description".

When writing a job description, keep in mind that the job description will serve as a major basis for outlining job training pr conducting future job evolutions.

A Job Description should include a:

- **Job Title**
- **Job objective or overall purpose statement**: This statement is generally a summary designed to order to orient the order to the general nature, level, purpose, and objective of the job. The summary should describe the board function and scope of the position and be no longer than three to four sentences.
- **List of duties or Tasks performed**: The list contains an item-by- item list of principal duties, continuing responsibilities, and accountability of the occupant of the position. The list should contain each and every essential job duty or responsibility that is critical to the successful performance of the job. The list should begin with the most important functional and relational responsibility that comprises at least 5% of the incumbent's time should be included in the list.
- **Description of the Relationships and Roles**: The occupant of the position holds within the company, including any supervisory positions, subordinating roles, and/or other working relationships.

  When using job description for recruiting situations, you may also want to attach the following:
- **Job specifications, Standards and Recruitments** - The minimum amount of qualifications needed to perform the essential functions of the job, such as education,

experience, knowledge, and skills. Any critical and expertise needed for the job should be included.

- **Job Location** - where the work will be performed
- **Equipment to be used in the performance of the job** - for example, do your company's computers run on an Apple Macintosh or PC Windows's environment?
- **Collective Bargaining Agreements** - Agreements and terms that relate to job functions, if applicable, such as when your company's employees are members of union.
- **Non-Essential Functions** - Functions which are not essential to the position or any marginal tasks performed by the incumbent of the position.
- **Salary Range** - Range of pay the position.

Keep each statement in the job description crisp and clear :

- Structure your sentences in classic verb / object and explanatory phrases.
- Always use the present tense verbs.
- If necessary, use explanatory phases telling why, how, where, or how often to add meaning and clarity.
- Omit any unnecessary articles such as "a," "an," "the," or other words for an easy to understand point description.
- Used unbiased terminology.
- Avoid using words, which are subject to differing interpretations.

TYPES OF RECRUITMENT course 3

Executive Search (Head hunting)

Corporate clients to find the most suitable candidates to fill a particular role on a fee basis retain executive search firms. Search is typically used for senior level jobs for which there is smaller pool of appropriate high level candidates who can be identified and targeted. Search aims to search the best candidates for the position whether or not they are looking to move. There are number of major executives search firms that work internationally across different industry sectors. Small boutique firms operate within particular industries or functions.

Advertised Selection:

This takes place when a firm is retained by a client to advertise in the national, regional or trade process to find candidates for a particular role. This approach relies on individuals being active in the job market and reviewing the newspaper or trade publications to find positions that may be zero interest to them. Advertised selection is most frequently used for hiring into middle-management positions. It can also be used for more senior roles for which the idea candidate might be select from a range of positions and therefore difficult to target through search.

Contingent Recruitment:

It is also called because the fees charged by the recruitment firm are contingent on a placement being made. Recruitment firms in this market rely on the jobseekers registering directly with them or replying to the advertisement. In market where there is a healthy supply of available candidates, contingent recruitment firms may be used by corporations to handle more senior roles and to avoid playing search fees.

Online Recruitment:

In the fast two or three years has been a proliferation of firms offering recruitment services via the Internet. Most of these sites aggregate jobs from a variety of sources, but few offer the right kind of opportunities for senior executives. The distinction between the different kinds of business in recruitment may not always be clear to a potential candidate. Ascertain at the outset what kind of organization you are dealing with and how it is likely to use personal information that you supply.

Relationship between headhunters and candidates

Although the headhunter is acting for its client, consultants should also develop professional relationship with candidates and other individuals with whom they come into contact. The se relationships develop over a period of many years and or of benefits to both parties.

Networking within the industry helps to ensure that you are known to search professionals. Do not under estimate the value of having good reputation in your field and being known to and respected by your peers in other organizations as well as former bosses.

THEORIES REGARDING RECRUITMENT:

Recruitment is a two way street i.e. it takes a recruiter and a recruitee. The objective factor theory views the process of organizational choice has being one weighing and evaluating a set of measurable characters of employment offers such as pay, benefits, location, opportunity for advancement, the nature of work to be performed and educational opportunities.

The critical contact theory suggests that the typical candidate is unable to make a meaningful differentiation of the organization offers in terms of subjective factors. The subjective factor theory emphasizes on the congruence between personality patterns and the image of the organization i.e. choices are made on a highly personal and emotional basis.

Constraints on recruiting sources

There are five specific constraints that limit the freedom of managers to recruit and select any candidate of their choice.

- Image of the organization
- Job to filled is unattractive
- Internal organizational policies
- Union requirements
- Government's influence

Steps in recruitment process:

Recruitment is a vital function of personal administration and forms a prerequisite to the effectiveness of an enterprise. According to Famularo, personal recruitment process involves five elements.

- Recruitment policy
- Recruitment organization
- Forecast of manpower
- The development of sources of recruitment and different techniques used for utilizing these sources.
- A method of assessing the recruitment program.

SELECTION

After identifying the sources of human resources, searching for prospective employees and stimulating them to apply for job in an organization, the management has to perform the function of selection the right employees at the right time.

- Recruitments of the job to be filled have been clearly specified.
- Employee's specifications have been clearly specified.
- Candidates for searching have been attracted.

Thus the development of job analysis, human resource planning and recruitment are necessary prerequisites to the selection process. A breakdown in any of these process can make even the best selection system ineffective.

SELECTION POLICY

While formulating a selection policy, due consideration should be given to organization requirements as well as technical and professional dimensions of selection elates to whether or not a professional selection program should be undertaken.

PURPOSE:

The purpose of selection process is to make effective use of individual difference with a view to selecting individuals who posses the greater degree of qualities required for effective job performance it has been found that differences between the most efficient and the least efficient workers for certain jobs such as spoon polishing are five times. It indicates advantages of developing selection method to reject individuals with relatively less efficiency.

ESSENTIALS OF SELECTION PROCEDURE

The selection process can be successful if the following requirements are satisfied:

- There must be some standard of personnel with which has prospective employee may be compared.
- There must be a sufficient number of applicants from the required of employees may be selected.
- Some one should have the authority to selection.

Meaning and Definition:

Selection is the process of differentiating between applicants in order to identify and heir those with a greater likely hood of success in a job.Selection is the process of picking individuals with requisite qualifications and competence to fill jobs in the organization.

Selection process:

- Preliminary Interview
- Selection Tests
- Employment Interview
- Reference and background analysis
- Environmental Factors
- Selection Decision
- Physical Examination
- Job offer
- Employment contract
- Evaluation

Types of Interviews:

- Structured Interviews
- Unstructured Interviews
- Mixed Interviews
- Behavioral Interviews
- Stressful Interviews

Guidelines to Interviews:

- Planed Interview
- Establish an easy and informal relationship
- Encourage the candidate to talk
- Cover the ground as planned
- Probe where necessary
- Analysis career and interest to reveal strengths, weakness, patterns of behavior
- Maintain control over the direction and time taken for the interview

FOLLOWING ARE THE MAIN SOURCE OF RECRUITMENT

- Employment exchange
- Open advertisement
- Campus recruitment
- Deputation
- Internal resources

Posts with a maximum of the scale of pay not exceeding RS--- Personal management are to be notified to local employment exchange. All vacancies advertised to employment exchange will simultaneously be circulated internally to provide to local employment exchange.

Service of the officers of other public service undertaking may be obtained on deputation as and when required. The period of such deputation will normally 2 years. This can be extended by one more year. Officers on deputation will have to for pay either in the company scale or for the admissible of defense civil.

PROCEDURE

List a: Containing the names of those fulfilling the specification advertised.

List b: Containing the names of those not fulfilling the specific notified.

List c: Consisting of the cases where personal group is not in a position to determine the eligibility of the candidates.

Applications along with above list will be sent to the user groups for their scrutiny candidates are called for test / interview.

RECRUITMENT OF PERSONAL IN BRANCHES

When ever vacancies are to be notified to employment exchange advertised in newspapers and the recruitment selection of personal group at head quarters will take necessary action and send the intimation to the officers-in charge of the respective branch office. It is necessary that recommendations of the selection committees, along with the following documents will be sent to officer in charge, recruitment immediately after the interview.

- List of candidates in original received from employment exchange
- Applications received from the candidates.
- Minutes of the selection committee, along with the full particulars of the candidates who have been recommended.

PREFERENCE IN RECRUITMENT course 4

Company to fulfill the statutory obligations with regard to reservations and concessions allow to candidates belonging to SC, ST, physically handicapped and ex-service.

OFFER OF APPOINTMENT

Recruitment section will issue the offer of appointment to selected candidates panel of selected candidates are normally valid for six months, however, that can be revalidated for further period of six months.

Candidates once rejected by the selection committee will not be considered for the same post with in six months of such rejection.

Formalities to be observed at the time of joining

- Identify the person
- Academic and professional qualification
- Date of Birth
- Experience / Service certificate
- If earlier employment in a government / public sector organization a proper release certificate.

After verification recruitment selection obtains from the candidate:

- Joining reports in triplicate
- Letter of acceptance of offer
- Five sets of attestation forms, duly completed
- Two certificates of character, in prescribed format
- Medical fitness certificate from not below the rank of civil surgeon
- Two copies of passport size photographs
- True copy of all testimonials duly attested by a gazettes officer of central/state government of person equivalent rank
- Two copies certificates of pay and allowed last drawn
- Two copies of relieving order in case where earlier employed in a Government/public sector organization
- Caste certificate in support of SC/ST
- Three copies of stamp size photographs

Candidate will require filing up the following:

- Two copies of personal data sheet
- One copy of hometown declaration form
- SRI KRISHNA JUTE MILL declaration from or application for issue of SRI KRISHNA JUTE MILL medical card as the case may be.

- Declaration of material status
- Oath of secrecy
- Oath of allegiance
- Statement of immovable property in case of officer.

CHAPTER - 5

Table 4.1

Opinion on the way of coming across the vacancy.

Options	Number of respondents	Percentage
Newspapers	**28**	**51.85**
Friends/relatives	**21**	**38.88**
Campus Recruitment	**1**	**1.87**
Job Websites	**4**	**7.40**
Total	**54**	**100.00**

Source: Primary Data

Graph 4.1

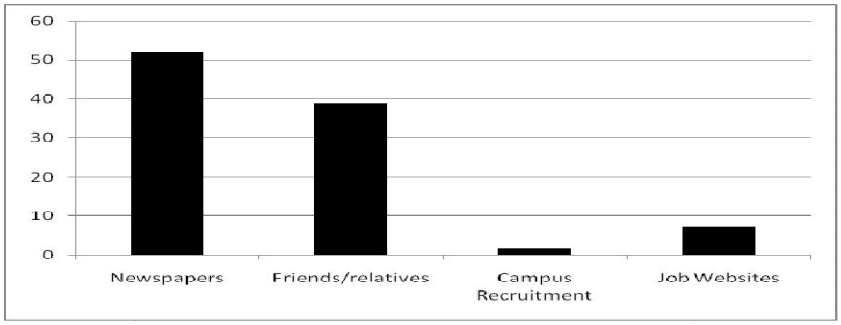

Interpretation:

As per the survey, it is found that 51.85% of the employees says that they came to know the vacancy through News papers, 38.8% of the employees say through Friends/Relatives, 1.87% of the employees through Campus recruitment and 7.40% of them say that through Job Websites.

Table 4.2

Opinion on the employees reasons for applying in this organization.

Options	Number of respondents	Percentages
Company Reputation	**20**	**37.06**
Job Security	**18**	**33.33**
Good Compensation	**4**	**7.40**
Better Working Conditions	**8**	**14.81**
Future Growth	**2**	**3.70**
All the above	**2**	**3.70**
Total	**54**	**100.00**

Source: Primary Data

Graph : 4.2

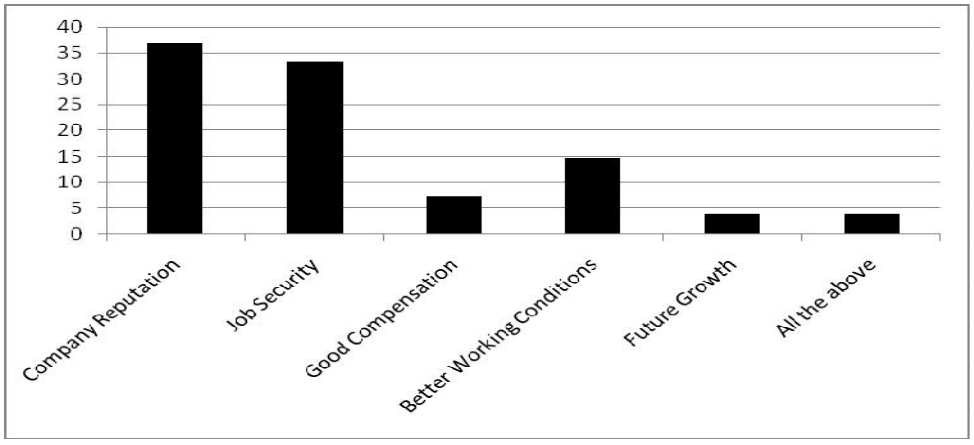

Interpretation:

From the above table it is found that 37.06% applied in this organization because of company reputation, 33.33% applied because of job security, 7.40% applied because of good compensation, 14.81% applied due to better working conditions, 3.70% applied in the organization due to future growth while other 3.70% employees applied for all the reasons mentioned above.

Table 4.3

Opinion of the employees on qualities to be given significance during Recruitment.

Options	Number of respondents	Percentages
Communication Skills	**4**	**7.41**
Subject Knowledge	**16**	**29.63**
Experience	**32**	**59.26**
All the above	**2**	**3.70**
Total	**54**	**100**

Source: Primary Data

Graph : 4.3

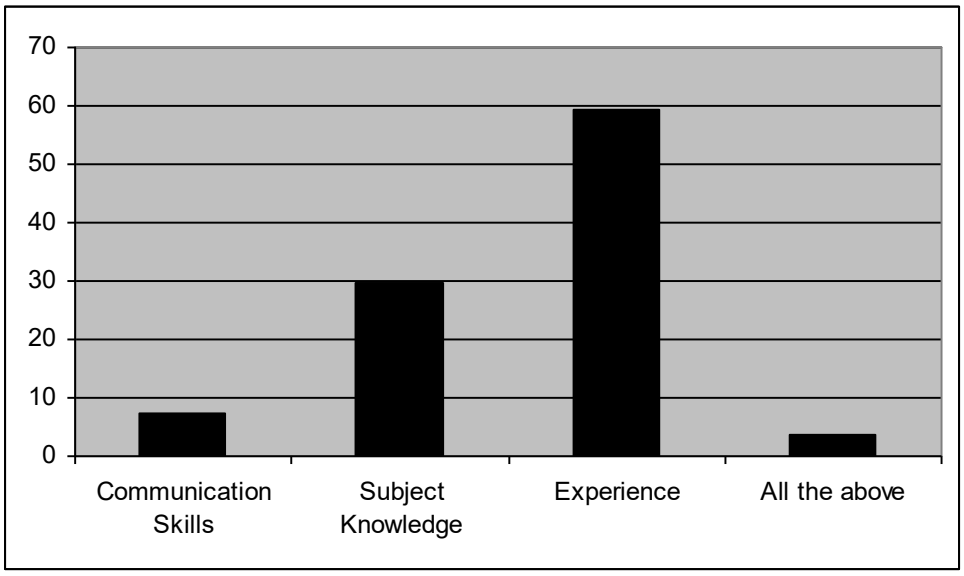

Interpretation:

From the above table it is found that 7.41% prefer that communication skills should be given importance during recruitment, 29.62 % prefer subject knowledge, 59.26% prefer experience and other 3.70% prefer all the three during recruitment.

Table 4.4

Opinion on Time period between applying for the job and interview calls.

Options	Number of respondents	Percentages
1 Weeks	**11**	**20.37**
2 Weeks	**25**	**46.30**
3 Weeks	**13**	**24.07**
1 Month	**5**	**9.26**
Total	**54**	**100**

Source: Primary Data

Graph 4.4

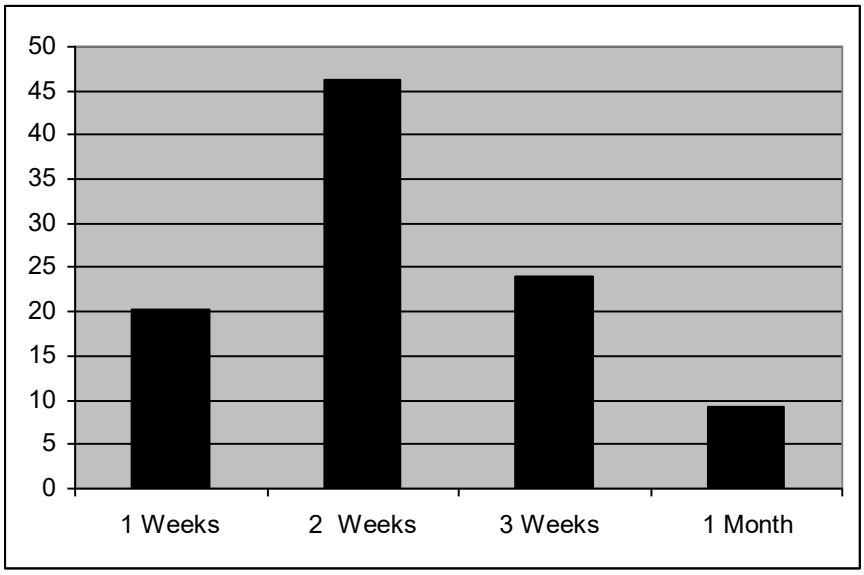

Interpretation:

From the above, it is found that 20.37% of employees say time period between applying for the job and interview call is 1 week, 46.29% of them say 2 weeks, 24.07% of them say 3 weeks and 9.25% of them say 1 month. From this it can be interpreted that, the firm is immediately calling for selection, immediately after recruitment with in 2 weeks

Table4. 5.

Opinion on the time gap between selection and joining the job.

Options	Number of respondents	Percentages
1 Week	**22**	**40.74**
2 Weeks	**18**	**33.33**
3 Weeks	**12**	**22.22**
4 Weeks	**2**	**3.71**
Total	**54**	**100**

Source: Primary Data

Graph 4.5

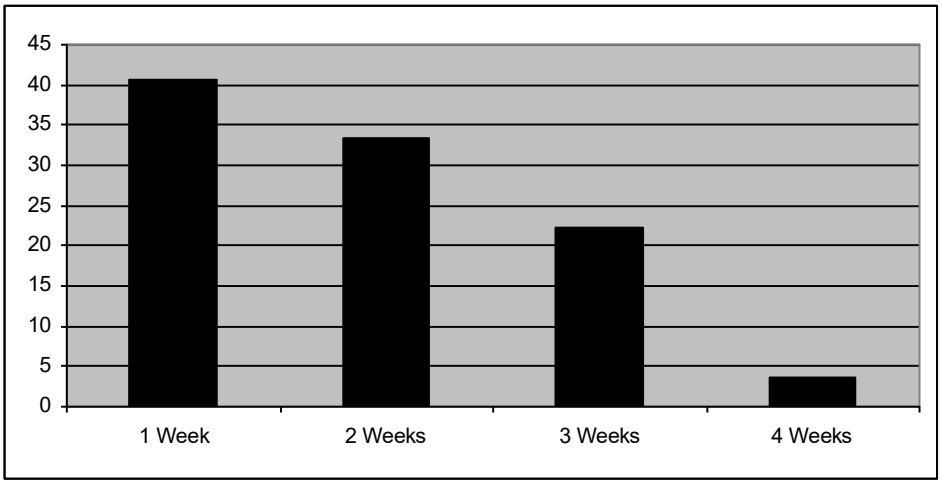

Interpretation:

From the above data, it is found that 40.74% of the employees says time gap between recruitment and joining the job is 1 week, 33.33% of them says 2 weeks and 22.22% of them says 3 weeks and 3.70% of them say 4 weeks

Table 4.6.

Opinion on the expectations of employees from your present employer.

Options	Number of respondents	Percentages
Better Working conditions	10	18.52
Recognition	11	20.37
Quick Promotions	12	22.22
High Salary	15	27.78
All the above	6	11.11
Total	54	100

Source: Primary Data

Graph 4.6

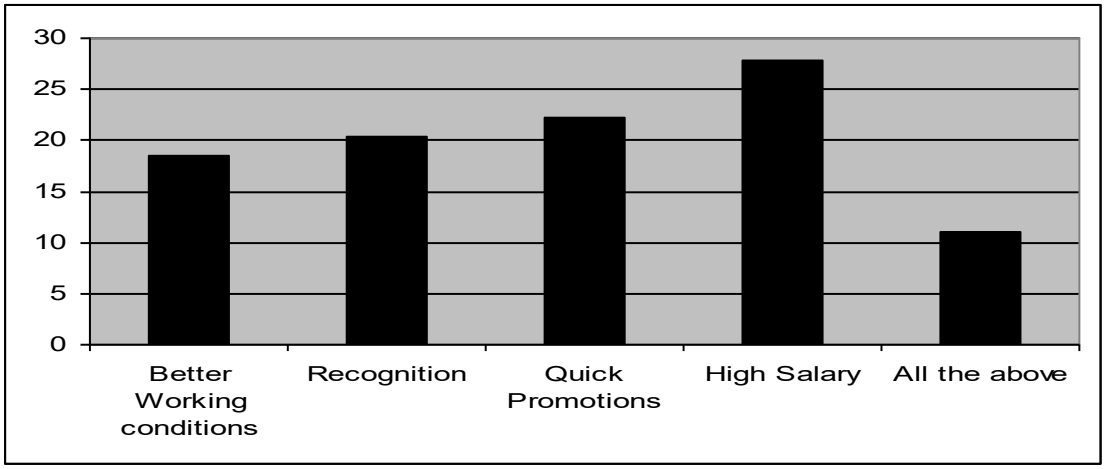

Interpretation:

As per the survey, it is found that 18.51% of the employees expecting better working conditions, 20.37% of them are expecting recognition, 22.22% are expecting quick promotions, 27.77% are expecting high salary and 11.11% of the respondents are expecting all the above. From this, it can interpret that most of them, wish to increase the salary.

Table 4. 7.

Opinion on satisfaction of recruitment process in Jute Mill

Options	Number of respondents	Percentages
Excellent	**30**	**55.56**
Good|	**9**	**16.66**
Satisfactory	**10**	**18.52**
Poor	**5**	**9.26**
Total	**54**	**100**

Source: Primary Data

Graph 4.7

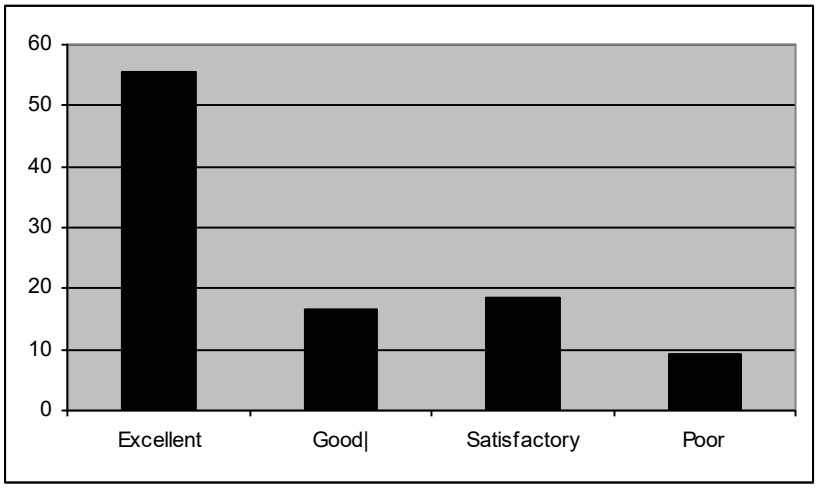

Interpretation:

From the data it is found that 55.56% of the employees say that recruitment process is excellent in the organization, 16.66% of them says good, 18.51% of them says it is satisfactory and 9.25% says that recruitment process is poor. so some measures are to be taken for improvement of recruitment process.

Table 4.8

Opinion on Information provided by the recruiter to attract candidates

Options	Number of respondents	Percentages
Job Description	**12**	**22.22**
Company Reputation	**7**	**12.97**
Growth in Job	**14**	**25.93**
All the above	**21**	**38.88**
Total	**54**	**100**

Source: Primary Data

Graph : 4.8

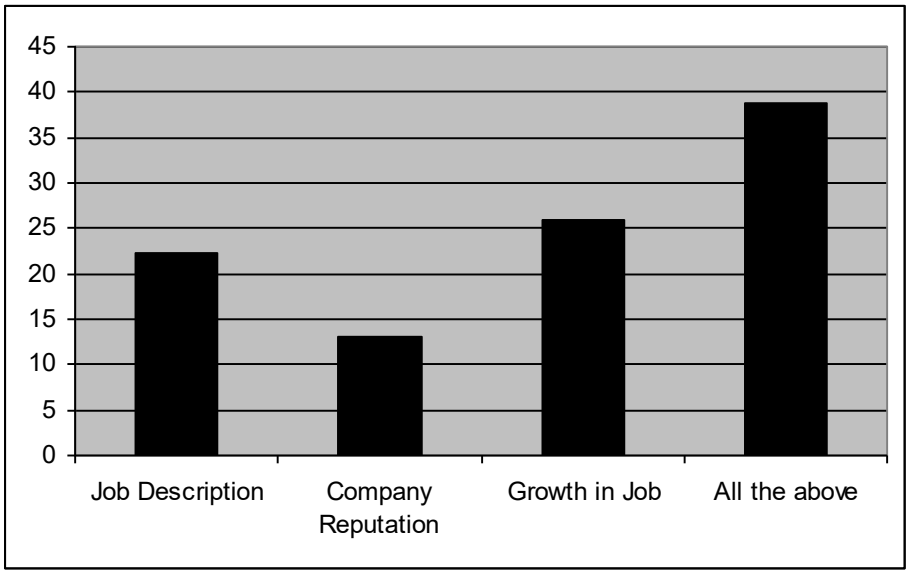

Interpretation:

From the data it is found that 22.22% of the employees says that only job description is provided for the candidates, 12.97% says that company reputation, 25.93% says growth in and 38.8% says all the above are been provided by the recruiter to attract candidates during recruitment.

Table 4.9

Opinion on whether the reference of internal employee's should be given more importance or not.

Options	Number of respondents	Percentages
Strongly Disagree	**25**	**46.29**
Disagree	**2**	**3.71**
Agree	**10**	**18.51**
Strongly agree	**11**	**20.38**
Neither Agree nor Disagree	**6**	**11.11**
Total	**54**	**100**

Source: Primary Data

Graph : 4.9

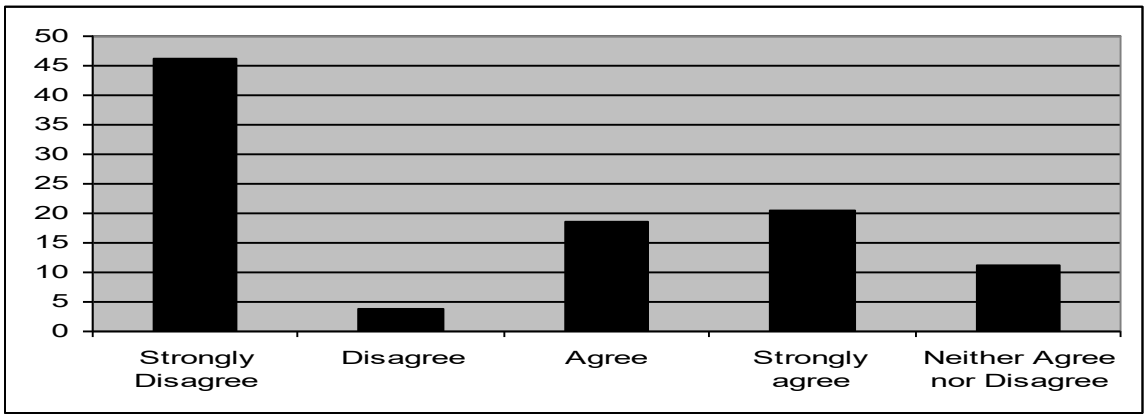

Interpretation:

From the data it is found that 46.29% of the employees are strongly disagree in giving the reference of internal employees, 3.70% of the employees disagree while 18.51%&20.37% of employees agree & strongly agree respectively with references. The remaining 11.11% of them Neither Agree nor Disagree to the references.

Table 4.10

Opinion on the period of recruiting the employee

Options	Number of respondents	Percentages
Quarterly	**9**	**16.66**
Half yearly	**10**	**18.53**
Annually	**5**	**9.26**
Whenever required	**30**	**55.55**
Total	**54**	**100**

Source: Primary Data

Graph : 4.10

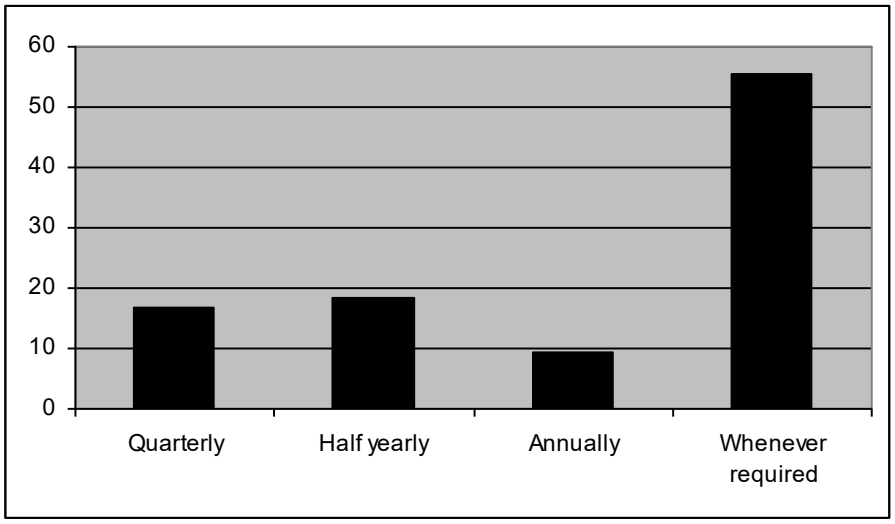

Interpretation:

From the data it is found that 16.66% of the employees agree that organization recruits employees quarterly, 18.53% says half-yearly, 9.26% says annually and 55.55% says when requirement arises.

Table 4.11

Opinions on if there is a need for changes in recruitment process in Jute Mill

Options	Number of respondents	Percentages
Yes	**48**	**88.89**
No	**6**	**11.11**
Total	**54**	**100**

Source: Primary Data

Graph :4.11

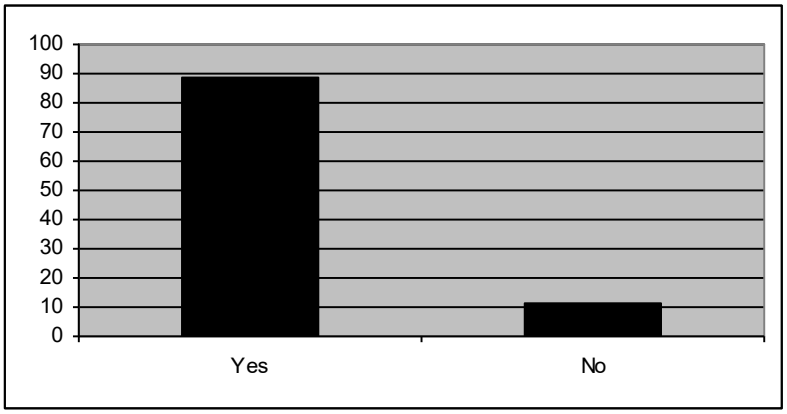

Interpretation:

88.88% of the employees responded that they need a change in the recruitment process in the organization, while11.11% of them are satisfied with the present recruitment process in the organization & told that there is no need to change the process.

Table 4.12

Do you think recruitment policy is meeting the overall objectives of the company

Options	Number of respondents	Percentages
Yes	**15**	**27.78**
No	**5**	**9.26**
Some extent	**30**	**55.55**
Can't say	**4**	**7.41**
Total	**54**	**100**

Source: Primary Data

Graph : 4.12

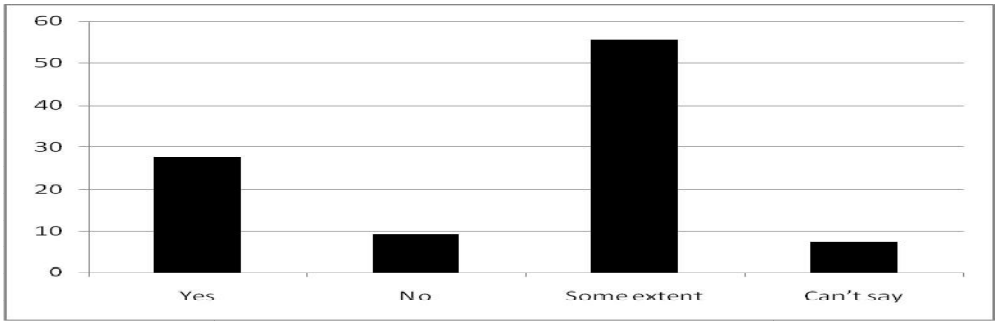

Interpretation:

As per the survey it is found that 27.78% of the employees agree that recruitment policy followed is fulfilling the objectives of the company .while 55.55% of employees responded that it meeting to only some extent and 9.26%of respondents told that it doesn't meet and 7.41% of them are unable to respond.

Table 4.13

Opinion of respondent satisfaction with placement.

Options	Number of respondents	Percentages
Yes	**45**	**83.33**
No	**9**	**16.67**
Total	**54**	**100**

Source: Primary Data

Graph : 4.13

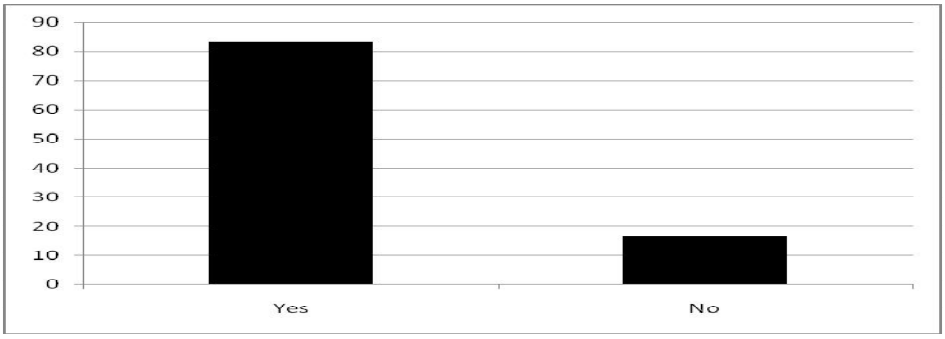

Interpretation:

83.33% of respondents told that they are satisfied with the present placement of the job, while 16.67% are not satisfied

Table 4.14

Opinion on proper utilization of skills & knowledge in the job

Options	Number of respondents	Percentages
To great extent	**33**	**61.11**
Up to some extent	**12**	**22.22**
Not at all	**9**	**16.67**
Total	**54**	**100**

Source: Primary Data

Graph :4.14

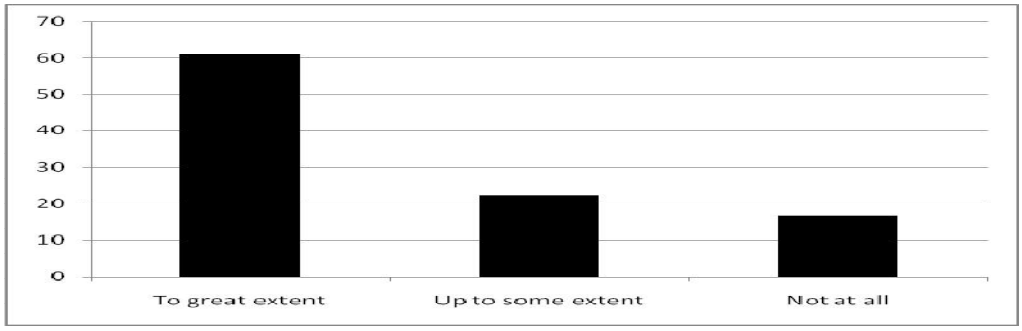

Interpretation:

From the above table responses regarding employees' skills and knowledge are properly utilized in their job as follows. 61.11% of the employee's to great extent utilize the skills and knowledge and 22.22% of employees utilize some extent and 16.67% of employees said not at all utilize their skills and knowledge.

Table 4.15

Opinion on feeling proudness to work in SRI KRISHNA JUTE MILL

Options	Number of respondents	Percentages
Yes	**42**	**77.78**
No	**6**	**11.11**
Can't say	**6**	**11.11**
Total	**54**	**100**

Source: Primary Data

Graph : 4.15

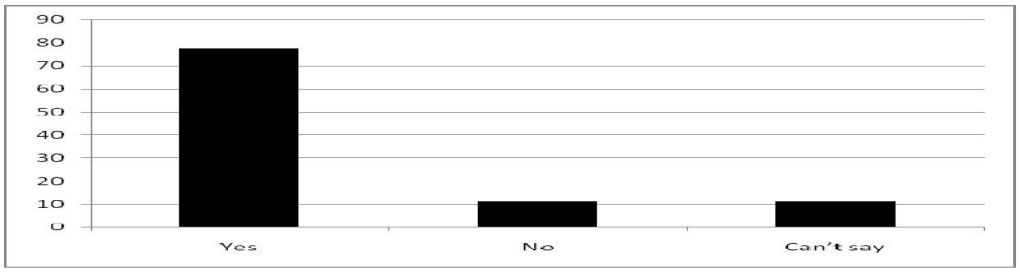

Interpretation:

77.78% of employees feel proud to work in the organization, while 11.11% don't feel proud in working and remaining 11.11% of employees unable to respond.

Table 4.16

Opinion on the policy of rehabilitation of dependents of deceased employees.

Options	Number of respondents	Percentages
Yes	**48**	**88.89**
No	**6**	**11.11**
Total	**54**	**100**

Source: Primary Data

Graph : 4.16

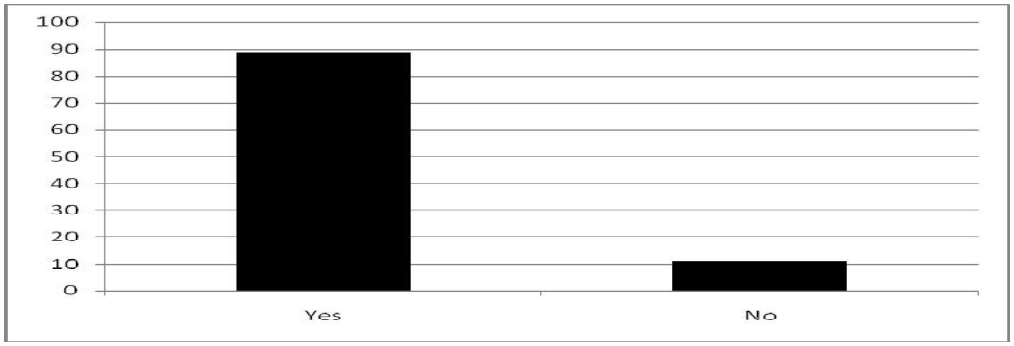

Interpretation:

It has been analyzed that SRI KRISHNA JUTE MILL is providing a great opportunity for the dependents of the deceased employees in the form of giving employment etc, based upon their suitable qualifications to a particular job. With this 88.89% of employees are satisfied, while 11.11% of employees are unsatisfied with the policy of rehabilitation of dependants of deceased employees.

CHAPTER - 6

FINDINGS

- It is found that the experience and subject knowledge were given most preference while recruiting employees.
- It is observed that the employees are expecting high salaries and quick promotions from their employers.
- It is found that the organization recruiting an employee when ever required.
- Only 62% of the employees feel that their skills and knowledge are properly utilized in their job.
- It is found that the employees working over here are satisfied with mode of the selection process adopted here.
- Majority of the respondents are attracted towards the employer brand image of organization and job security.
- It is observed almost all the employees agree that the recruitment process followed in their company is meeting overall objectives of the organization.
- It is observed that the internal references are relatively given importance.
- It is observed that most of the employees here are very satisfied with their placement in the company.
- It is providing a great opportunity for the dependants of the deceased employees in the form of giving employment etc, based upon their suitable qualifications to a particular job.

SUGGESTIONS

- I suggested that the management and the employees have to find out new sources of recruitment that may be different from sources that are being adopted by the competitors for the better results.
- SRI KRISHNA JUTE MILL may consider the possibility of publishing advertisements in websites.
- It may be suggested that the company may consider the possibility of recruit from sources like:
    1. Approaching Consultancies
    2. Conducting Campus Recruitments
    3. Approaching Employment exchange
- Innovative means of putting campus in Job Meals, Seasonal recruitment campus at selected locations can also be considered.
- I suggested that the organization may increase the number of hiring executives from currently one to at least four. So that the work completes effectively and quickly
- It is suggested that the HR departments have to concentrate on communication skills of employees while recruiting.
- It is better to base on both communication skill and subject knowledge for recruiting the employees.
- It is suggested that the recruitment in the organization should be a continuous process i.e. Half yearly or quarterly.
- It is suggested that the organization may use the skills and knowledge of employees optimally.

ANNEXURE

QUESTIONER

1. How did you come across this vacancy?
   a) Newspaper b) Friends/Relatives
   c) Campus recruitment d) Job websites
2. What are the reasons for applying in this organization?
   a) Company reputation b) Job security
   c) Good Compensation d) Better working conditions
   e) Future career growth f) All
3. What according to you the qualities to be given importance during Recruitment?
   a) Communication Skills b) Subject Knowledge
   c) Experience d) All the above
4. What was the time period between applying for the job and interview calls?
   a) 1 Week b) 2 Weeks
   c) 3Weeks d) 1 month
5. What is the time gap between recruitment and joining the job?
   a) 1 Week b) 2 Weeks
   c) 3 Weeks d) 4 Weeks
6. What are your expectations from your present employer?
   a) Better working conditions b) Recognition
   c) Quick promotions d) High salary
   e) All the above
7. On what basis you have been recruited for this job?
   a) Merit / Qualification b) Experience
   c) Recommendation d) any other specify
8. What information does the recruiter provide to attract candidates?
   a) Job description b) Company reputation
   c) Growth in job d) All the above
9. Do you think internal employee's references should be given more importance?
   a) Strongly Disagree b) Disagree

c) Agree d) Strongly agree

e) Neither agrees nor disagrees

10. How often your company recruits people?

a) Quarterly b) Half yearly

c) Annually d) whenever required

11. Do you think that there is a need for any change in recruitment process in Jute Mill?

a) Yes b) No

12. Do you think that recruitment policy is meeting the overall objectives of the company?

a) Yes b) No

c) To some extent d) Can't say

13. Are you satisfied with your placement?

a) Yes b) No

14. Do you feel your skills and knowledge are properly utilized in your job?

a) To great extent b) Up to some extent

c) Not at all

15. Do you feel proud to work in Jute Mill?

a) Yes b) No

c) Can't say

16. Are you satisfied with the policy of rehabilitation of dependents of deceased employees?

a) Yes b) No

BIBLIOGRAPHY

- ASWATHAPPA, Human Resource Management (4th Edition) McGraw Hill, Delhi, 2005.
- EDWIN B. FLIPPO, Personnel Management McGraw Hill, Delhi, 1984.
- KOTHARIC.R, Research Methodology (2nd Edition) Vishwa Prakasham,Delhi,1997.
- C.B. MEMORIA, Personnel Management (10th Edition) Himalaya Publishing House, Delhi, 1997.

Academic Year 2019-2020

Name of the Project: **A STUDY ON "INVENTORY MANAGEMENT WITH REFERENCE TO CREAM LINE DAIRY PRODUCTS LIMITED HANUMAN JUNCTION**

SL NO	COURSE NO	COURSE NAME	PAGE MAPPING
1	1	Methodology	16
2	2	Primary data:	16
3	3	Secondary Data	17
4	4	Methods Of Valuation	49
5	5	Inventory Control	53
6	6	Abc Analysis	56
7	7	Importance of Eoq	54

1) Total Number of Domain subjects :***5***

2) Number of Subjects that include experiential learning through project work :***3***

3) Average:***6***

HOD
HEAD
Department of Management Studies
Ramachandra College of Engineering
VATLURU (V), Padapadu (M),
ELURU-534 007 W.G.Dt. A.P.

Academic-Coordinator (**MBA)**

PRINCIPAL
PRINCIPAL
Ramachandra College of Engineering
VATLUR (V), ELURU - 534 007
West Godavari District

A STUDY ON "INVENTORY MANAGEMENT WITH REFERENCE TO CREAM LINE DAIRY PRODUCTS LIMITED HANUMAN JUNCTION.

(A project report Submitted to Jawaharlal Nehru Technological University, Kakinada in partial fulfillment of the Requirements for awarding the Degree)

IN

MASTER OF BUSINESS ADMINISTRATION

SUBMITTED BY

GONNURU SUPRIYA REDDY

REGD. NO: 18ME1E00H3

UNDER THE ESTEEMED GUIDANCE OF

Dr. CH.SIVA KUMAR, MBA, Ph.D,

ASSOCIATE PROFESSOR

DEPARTMENT OF MANAGEMENT STUDIES

RAMACHANDRA COLLEGE OF ENGINEERING

(AFFILIATED TO JNTU, KAKINADA, APPROVED BY AICTE, NEW DELHI) NH-5, BY PASS ROAD, VATLURU (V), ELURU, W.G. DIST- A.P

2018-20

DECLARATION

I, hereby declare that, this project report titled – **A STUDY ON "INVENTORY MANAGEMENT WITH REFERENCE TO CREAM LINE DAIRY PRODUCTS LIMITED HANUMAN JUNCTION.** is a bonafide work done and submitted to the **JNTU, KAKINADA, DEPARTMENT OF MANAGEMENT STUDIES, RAMACHANDRA COLLEGE OF ENGINEERING** is an original work carried out by me and is not submitted to any other purpose or published any time before. The information & findings of this report are based upon the information collected by me during the study period.

Place: ELURU
Date**:**

(GONNURU SUPRIYA REDDY)

Regd. No: 18ME1E00H3

College Code : ME

RAMACHANDRA
COLLEGE OF ENGINEERING

NH-5 Bypass Road, Vatluru(v), ELURU -534007, (A.P.)
(Approved by AICTE, New Delhi and Affiliated to JNT University,Kakinada)

CERTIFICATE

This is to certify that, the Project entitled **A STUDY ON "INVENTORY MANAGEMENT WITH REFERENCE TO CREAM LINE DAIRY PRODUCTS LIMITED HANUMAN JUNCTION.** Submitted by **GONNURU SUPRIYA REDDY** as partial fulfillment of the requirements for awarding a Degree in **MASTER OF BUSINESS ADMINISTRATION,** from Jawaharlal Nehru Technological University, Kakinada, under the guidance and supervision of **Dr. CH.SIVA KUMAR, MBA, Ph.D,, ASSOCIATE PROFESSOR, DEPARTMENT OF MANAGEMENT STUDIES, RAMACHANDRA COLLEGE OF ENGINEERING, VATLURU, ELURU,** during the year **2018-2020.**

PROJECT GUIDE **HOD**

EXTERNAL EXAMINER

Ph: 08812-215 150, 152, Fax: 08812-234 128 email: rcee_elr@yahoo.com, website: rcee.ac.in

CREAMLINE DAIRY PRODUCTS LIMITED
Registered office : # 6-3-1238/B/21,
Asif Avenue, Raj Bhavan Road, Somajiguda,
HYDERABAD-500082
Ph : +91-40 - 23412323/1860-4252627
Fax : +91-40 - 23323353
Email : jersey@creamlinedairy.com
Website : www.creamlinedairy.com
CIN : U15201AP1986PLC006912

Factory Address :
Survey No. 21, EPURU Village-521 105
Near Hanuman Junction, Pedapadu Mandal
West Godavari Dist, Andhra Pradesh

Date: 08-07-19

CERTIFICATE

Certify that **Miss Gonnuru Supriya Reddy**, Roll no : **18ME1E00H3** a student of **Ramachandra College of Engineering**, She completed her Project Work in "**Inventory Management**" At Our Organization from **03 -06 -2019 to 06 07 -2019** successfully Her performance during the Training period was found satisfactory.

This certificate is issued a partial fulfillment of her academic Programme/curriculum

(K. V. Somasekhar)
Manager-HR

ACKNOWLEDGEMENT

It is inevitable that thoughts and ideas of other people drift into the subconscious when one feels to acknowledge the help derived from other.

I am grateful to **Dr. DOLA SANJAY.S, M.Tech, Ph.D, PRINCIPAL OF** Ramachandra College Of Engineering, Vatluru, Eluru. **Mrs. K. SRI DURGA, MBA, (Ph.D),** Head of the Department for Management Studies, for their blessings and encouragement throughout my course of study.

I express my sincere gratitude and thanks to **Dr. CH.SIVA KUMAR, MBA, Ph.D,, ASSOCIATE PROFESSOR,** and project guide, and the faculty members in Department of Management Studies, **RAMACHANDRA COLLEGE OF ENGINEERING, VATLURU, ELURU,** for their encouragement, continuous support and timely suggestions.

I take this opportunity to convey my sincere thanks to **CREAM LINE DAIRY PRODUCTS LIMITED HANUMAN JUNCTION** for giving me an opportunity in their Organization.

I express my thanks to my parents for giving me moral support and encouragement throughout my studies. I deeply appreciated one and all whose guidance has been given at every step and without whom this work would not be completed.

(GONNURU SUPRIYA REDDY)

CONTENTS

- **Title Page**
- **Declaration**
- **College Certificate**
- **Company Certificate**
- **Acknowledgement**

CHAPTER-1

Introduction 08-15

CHAPTER-2

Industry Profile 17 -26

CHAPTER-3

Company Profile 28 - 44

CHAPTER-4

Theoretical Frame Work 46 - 57

CHAPTER-5

Analysis and Interpretation **59 - 68**

CHAPTER-6

Findings and Suggestions 70 - 72

APPENDIX

Bibliography 74

CHAPTER - 1

INTRODUCTION TO FINANCIAL MANAGEMENT:

Finance in the modern business world is regarded as LIFE AND BLOOD OF A BUSINESS ENTERPRISE. Finance function has become so important that it has given birth to financial management as a separate subject. So this subject is acquiring a universal applicability.

Financial management is that managerial activity which is concerned with the planning and controlling of the firm's financial resources. As a separates activity or discipline is of recent origin it was a branch of economics till 1890. Still today it has no unique body of knowledge of its own, and it draws heavily on economics for its theoretical concepts.

The subjects of financial management are of immense interest to both academicians and practicing managers. It is of great interest to academicians because the subject is still certain areas where controversies exist for which no unanimous solution has been reaching as yet. Practicing managers are interested in this subject because among the most crucial decisions of the firm's are those which relate to finance and un understandings of theory of financial management provides them with conceptual and analytical insights to make decisions skillfully.

The modern thinking in financial management accords a far greater importance to management in decision making and formulation of policy. Financial management occupies key position in top management and plays a dynamic role in solving complex management problems. They are now responsible for shaping the fortunes of the enterprise and are involved in allocation of capital.

DEFINITIONS

"Financial Management is an area of financial division making, harmonizing individual motives and enterprise goals".

- Weston and Brigham

"Financial Management is the application of the planning and control functions to the finance function".

Howard and Upon

"Financial Management is the operational activity of a business that is responsible of a business that is responsible for obtaining and effectively utilizing the funds necessary for efficient operations".

-Joseph and Missies

SCOPE OF FINANCE:

Three most important activities of a business firm are

1. Finance
2. Production
3. Marketing

The firm secures capital it needs and employ in its activities which generates returns on invested capital. A business firm is an entity that engages in activities to perform the functions of finance, production and Marketing.

The raising of capital funds and using them for generating returns and paying returns to the supplies of funds is called the finance function of the firm. The main function of the financial managers is to plan for analyzing and utilizing funds to make the maximum contribution for the operation of the organization.

It realizes knowledge of the financial market from which the funds are drawn; it realizes knowledge of how to make sound investment decisions and to simulate efficient operations in the organizations. A large number of alternate choices involved in financial decisions. The choices include the use of internal resources, external funds and long-term funds.

FUNCTIONS OF FINANCE:

1. Investment decisions
2. Financing decisions
3. Dividend policy decisions
4. Liquidity decisions

- ***INVESTMENT DECISIONS:*** Investment decision (or) capital budgeting involve the decision of allocation of capital or commitment of funds to long term assets that would yield benefits in the future. Two importance aspects of the investment decision are:
  - ✓ The evaluation of the prospective profitability of new investments.
  - ✓ The measurement of a cut – off rate against that the prospective return of new investment could be compared.
- **FINANCIAL DECISION*:*** Finance decision is the important function to be performed by financial manager. He must strive to obtain the best financing mix or the optimum capital structure of the firm. The firm's capital structure is considered to be optimum when the market value of shares is maintained.

- **DIVIDEND DECISION*:*** Dividend decision deals whether the firm should distribute all profits or retain them or distribute a portion and retain the balance. The optimum dividend policy is one that maximizes the market value of the firm's shares.
- **LIQUIDITY DECISION*:*** Liquidity decision shows the current assets of the firms and its movement. Investment in current assets affects the firm's profitability, liquidity and risk. A conflict exists between profitability and liquidity while managing current assets. In order to ensure that neither insufficient nor unnecessary funds are invested in current assets. The financial manager should develop sound techniques.

OBJECTIVES OF THE STUDY

A study on the existing position of inventory management in the Organization CLDPL is as follows:

- To study the influencing factors of inventory management in the Organization.
- To examine the methods and techniques of inventory control in the Organization.
- To suggest the observations amiable solution to the problems.
- To examine the effectiveness of the inventory management on the overall profitability of CLDPL

NEED FOR THE STUDY

Every enterprise needs inventory for smooth of its activities. The unforeseen fluctuation in demand and supply of the goods also necessitate the need of inventory. In the absence of inventory, a firm will have to make purchase as soon as it receives orders. A firm also needs to maintain inventories to reduce ordering costs and avail quality discounts etc……..

The investments in inventory constitute the most significant part of current assets working capital in most of the undertaking. Thus it is very essential to have proper control and management of inventory. The purpose of inventory management is to ensure availability of materials in sufficient quality as and when required and also to minimize investment in inventories.

Inventory constitute the most significant part of manufacturing concern the objective of inventory management should be determine and maintain optimum level of inventory will be lie between two danger points of excessive and inadequate inventory.

The aim of inventory management thus should be avoid excessive and inadequate levels of inventories and to maintain sufficient inventories for the smooth production and sales operation. The assets, which the firm stores as inventory in anticipation of need, are raw materials. Work-in-progress, and finished goods. Inventory often to assets, which will be sold in future in the normal course of business operation. The assets, which firm stores as inventory in anticipation of need, are raw material, work-in-progress or process, and finished goods.

SCOPE OF THE STUDY

- The present study has been conducted on inventory management at Cream Line Dairy Product Limited (CLDPL).
- The study mainly focuses on analyzing inventory management practices at CLDPL.
- Various tools and techniques were adopted to study inventory management.
- It also focuses on the inventory conversion period.
- The stuffy also given importance to raw material inventory turnover and work in progress inventory turnover towards assessment of efficiency.
- The study was on the basis of different formulas.

LIMITATIONS OF THE STUDY

- Some information is highly confidential so it is very difficult to get the data from the organization.
- Time is the main constraint in completing the study with in the stipulated period (i.e., 6 weeks). It has become difficult to analyze all the documents in detail within six weeks.
- The availability of data pertaining to 5 years is one of the constraints.
- The analysis is made on the basis of secondary data only. Reliability on usage of secondary data is another limitation.
- There was being scope of gathering current information, as the auditing has not been by the time of project work.

RESEARCH METHODOLOGY

METHODOLOGY: course 1

The methodology in this content involves the process of collection of data from primary and secondary sources and interpreting the same by using the analytical tools and techniques utilizing the consequent finding to put forward liable and insightful suggestions to the company.

The present study is based both primary and secondary sources of data.

- Primary data
- Secondary data

PRIMARY DATA: course 2

A large part of primary data was collected in the course of my interaction with the personnel concerned departments and also developed in consultation with costing manager, material manager and officers. The data collected was regarding various aspects of inventory management like lead-time, ordering cost, carrying cost and working of online computerized stores system.

SECONDARY DATA: course 3

Secondary data is a data which is collected and prepared by others already. For this study the data has been collected from information through annual reports of the company, journals, magazines, standard text books, news papers and internet.

CHAPTER - II

PROFILE OF DAIRY INDUSRY

INDUSTRY IN INDIA:

India has 57 percent of the world's buffalo population and 16%of the cattle population. And India has now become the largest producer of milk in the world. Milk production gives employment to 70% dairy farmers. India is the number one Milk producing nation in the world.

Although Milk production has grown at a fast during the last three decades, Milk production in India is characterized by low productivity of milk animals and small animal's holdings. The tropical and semi-arid conditions in many parts of India make low milk collection and its economic transportation a challenge itself. The cost of milk production is amongst the lowest in the world.

Dairying in India through the small herd dairy system with feeding practices that do not place pressure on land has significant comparative and competitive advantages. The current per capital availability in milk is around 220gms per day and it is expected to show a growing trend. There have not been any large-scale imports of milk products during the past decade. Apparently even if there were a slowing down in the growth rate of milk production from 4 to 5 percent during the past three decades to fewer than 4 percent during 2000 to 2010, the country would generally be able to match the growth in demand for milk and milk products. The slowing down of demand in milk and milk products is basically due to the lack of purchasing power and inequality of income distribution towards the lower income group where the elasticity of consumption is comparatively higher than the higher income groups.

The integrated sample surveys showed that on all India bases about 50 percent of production is retained by the rural households. Therefore, out of 220 million tones, 100 million liters per day is available for marketable surplus forprocessing. The capacity registered under milk and milk products is about 66 million liters per day only. On the other hand, interns of actual through put the organized dairy sector is currently estimated to handle about 15 percent of the national production and around 30 percent of the marketable surplus in the country. Special thrust is to be placed on stronger customer focus, e-dairying, automation, professional management and quality milk.

World trade in dairy products is severely constrained by entry barriers such as quotas, subsidies, high import duties, forming of trade blocks, and non-tariff barriers

such as arbitrarily higher standards for animal health requirements, microbiological quality and environmental contaminants. And the main reason for the low yield is; lack of use of scientific practices in mulching. Inadequate availability of fodder in all season's unavailability of veterinary health services. India could certainly gaining a small services from world trade but significant foot hold in the International market in the coming years.

MARKET SIZE AND GROWTH:

Market size for milk is estimated to be 33m tons valued at Rs 429bn. The market is currently growing at round 4.5% PA in volume terms. It is one of the single segments amongst food products.

Milk production is largely concentrated in few states namely U.P, Gujarat, Punjab, Rajasthan, and Haryana. Milk production grew by a mere 1% P.A. Between 1947 and 1970. Since the early 70's under operation flood, production growth increased significantly averaging over 5% P.A.

About 75% of milk is consumed at the home hold level which is not a part of commercial dairy industry. Milk demand in 4 large metros is estimated to be 6m tons per day, about 40% of which is supplied by the traditional unorganized sector.

Loose milk has a larger market in India as it is perceived to be fresh by most consumers. In reality however, it processes a higher risk of adulteration and contamination.

INDIA WORLD'S LARGEST MILK PRODUCER:

India has become the world's No 1 milk producing country with output in 1999-2000[Marketing year ending March 2000] forecasting at 78 million tones. United States, where the milk production is anticipated to grow only marginally at 71 million tones, occupied the top slot till 1997. In the year 1997, India's milk production was on par with the V.S.at 71 million tones. The world milk production in 1998 at 557 million tons would continue the steady progress in recent years. Furthermore, the annual rate of growth in milk production in India is b/w 5-6 percent against the worlds at 1 percent.

DETAILS AT GLANCE:

World's Top Milk Producers			
Countries	**Years**		
	2009	**2010**	**2011**
India	74	71	68
United states	71	71	70
Russian Federation	33	34	36
Pakistan	22	21	20
Brazil	22	21	19
Ukraine	14	15	16
Poland	12	12	11
New Zealand	12	11	10
Australia	10	9	9
Total	**557**	**549**	**549**

EXPORT POTENTIAL:

India has the Potential to become one of the leading players in milk product exports location advantages : India is located admit major milk deficit countries in Asia and Africa, Major importers of milk and milk products are Bangladesh, china, Hong Kong, Singapore, Thailand, Malaysia, Philippines, Japan, U.A.K, Oman and other Gulf countries all located close to India.

- ***LOW COST PRODUCTION:*** Milk production is scale insensitive and labor intensive. Due to low labor cost, cost of production of milk is significantly lower in India.

CONCERNS IN EXPORT COMPETITIVENESS ARE:

- ***QUALITY:*** Significant investment has to be made in milk procurement, equipments chilling and refrigeration facilities. Also training has to be imported to improve the quality to bring it up to international standards.
- ***PRODUCTIVITY:*** To have an exportable surplus in the long term and also to maintain cost competitiveness, it is imperative to improve productivity of Indian cattle. there is a vast market for the export of traditional milk products such as ghee, Rasgolas, and other ethnic sweets to scattered all over the world.

➢ SWOT ANALYSIS OF INDIAN DAIRY INDUSTRY:

✪ STRENGTHS:

- High level of productions and global standings in most of the agro products.
- High level of employment generations both direct and indirect.
- High level of skill development through various institutes for agriculture productions land technology management.
- Lower level of production costs even with poor productivity and yields due to lower overheads.
- Indian dairy farmers are very cost effective even after working in a very low subsidized environment irrespective of their European counter parts.
- Cheap labor force.
- Higher customer base.

✪ WEAKNESS :

- Poor productivity and yield.
- Poor quality management at the production levels.
- Not much of technology penetration in the rural hinter land.
- Existence of any processing facilities at the farm level like food parks etc.,
- Poor quality orientation and consciousness at the farm level.
- Higher costs for food processing and thus costlier processed food.
- Lack of scale in food processing because of too much of fragmentation in the production as well as lack of proper supply chain management and refrigerated chains.
- Quality standard management execution more obligatory than mandatory and enforcement not too stringent for both domestic as well as exports markets.
- Poor per capital income thus restricting most of the consumers to live life happily with unprocessed food products only as the processed food is very costly due to cost inefficiencies arising out of poor scales and lack of Horizontal integration.

✪ OPPORTUNITIES:

- More orientation towards mechanized, organic and large scale farming due

to intervention of multinationals or better exposure of select Indian farmers to the international environment. The growth of so called rural correlate is found to be more than their urban counterparts in most of the regions in the country.

- Few large conglomerated (ITC, Reliance) shifting towards farming as backward integration to provide better forward linkages to their domestic FMCG and exports arms.
- Better accountability consciousness in various research institutes related to agriculture for developing better varieties, breeds with higher productivity and yields and also major industrial houses(Nicholas Primal) providing support to these institutions for a sustainable growth by investing heavily in new frontiers of technology like biotechnology.
- Increasing share of Indian food products in the international markets due to increasing Indians population outside the country as well as large exports by Indian companies in last few years with the benefits extended by the Indian government to exports income.

✪ **THREATS:**

- Neighboring countries which are trying to become more competitive in labour and more productive with their land use
- More penetration and branding in the international markets by comparatively very small nations both in size and production but with very high levels of food processing more than 60-70% against that of our country at around 2% for fruits and vegetables and 18% for milk.
- More penetration and branding in the international markets by comparatively very small nations both in size and production but with very high levels of food processing more than 60 – 70% against that of our country at around 2% for fruits and vegetables and 18% for milk.
- Lack of infrastructure at the rural level makes it a curse to be a part of rural India. Till now out of around 6.5 lacks villages only 20% can be considered as the one with amenities to provide a satisfactory lifestyle. In rest even the basic amenities are still to be provided and forget Any structured mannerism for reverse logistics.

- The marginal farmer participation in any form is not remunerated well and most of the cream is enjoyed by the middleman.
- In certain cases the middle man is earning more than both the farmer as wall as the processor put together.

➢ THE DAIRY CO-OPERATIVE NETWORK (AS ON MARCH 2010):

- Includes 170 milk unions
- Operates in over 346 districts
- Covers around 1,17,575 village level societies
- Is owned by around 12.4 million farmer members of; whom 3.2 millions were women.

➢ MILK PRODUCTION:

- India's milk production increased from 21.2 million MT in 1968 -69 to 97.1million MT in 2006-07.
- Per capita availability of milk was 41 grams per day in 2006 – 07, up from112 grams per day in 1968-69.
- India's 3.9 percent annual growth of milk production between 1995 – 96 and2007 – 08 surplus the 2 per cent growth in population; the net increase in availability is around 2 per cent per year.

➢ MARKETING:

- In 2007 -08 average daily cooperative milk marketing stood at 168.06 lakh liters; annual growth has averaged about 5.8 per cent compounded over the last five years.
- Dairy Cooperatives now market milk in all metros, major cities and more than 800 towns/cities.
- During the last decade, the daily milk supply to each 1000 urban consumers has increased from 17.5 to 58.8 liters.

➢ INNOVATION:

- Bulk-vending – saving money and the environment.
- Milk travels as far as 2,200 kilometers to deficit areas, carried by innovative rail and road milk tankers.
- Automatic Milk Collection Unit (AMCU) and Bulk Milk Cooler (BMC) at

grass root level – preserve quality and reduce post procurement losses.

➢ MACRO IMPACT:

- The annual value of India's milk production amounts to about Rs.1, 020 billion in 2006 – 07.
- Dairy cooperatives generate employment opportunities for around 12.4 million farm families.
- Livestock contributes about 27 per cent to the GDP from agriculture.

➢ DAIRY OPERATIVES:

Dairy Cooperatives account for the major share of processed liquid milk marketed in the country. Milk is processed and marketed by 170 Milk Producers Cooperative Unions, which federate into 15 State Cooperative Milk Marketing federations.

The Dairy Board's programmers and activities seek to strengthen the functioning of dairy cooperatives, as producer – owned and controlled organization. NDDB supports the development of dairy cooperatives by providing them financial assistance and technical expertise, ensuring a better future for India's farmers.

Over the years, brands created by cooperatives have become synonymous with quality and value. Brands like Amull(GCMMF), Vijaya (AP), Verka (Punjab), Saras (Rajasthan). Nadine (Karnataka), Milma (KERALA) AND Gokul (Kolhapur) are among those that have earned customer confidence.

Some of the major dairy cooperative federations include:

1. Andhra Pradesh dairy Development cooperative Federation Ltd (APPDDCF)
2. Bihar State cooperative Milk Producers' federation Ltd (COMPEED)
3. Gujarat Cooperative Milk Marketing Federation Ltd (GCMMF)
4. Haryana dairy development Cooperative federation Ltd (HDDCF)
5. Himachal Pradesh State Cooperative Milk Producers' Federation Ltd (HPSCMPF)
6. Karnataka Cooperative Milk Producers' Federation Ltd (KMF)
7. Kerala state Cooperative Milk Marketing Federation Ltd (DCMMF)
8. Madhya Pradesh state cooperative Dairy Federation Ltd (MPCDF)
9. Maharashtra RajyaSahakariMaryaditdurgdhMahasangh(Mahasangh)

10. Orissa State cooperative Milk Producers' Federation Ltd (OMFED)
11. Pradeshik Cooperative Dairy Federation Ltd (UP) (PCDF)
12. Punjab State Cooperative Milk Producers' Federation Ltd (MILKFED)
13. Rajasthan Cooperative Dairy Federation Ltd (RCDF)
14. Tamilnadu Cooperative Milk Producers' Federation Ltd (TCMPF)
15. West Bengal cooperative Milk producers' federation Ltd (WBCMPF)

DAIRY DEVELOPMENT:

In 1960, a pilot milk supply scheme was started in our state for the dairy development; its initial milk collection capacity was 100 liters a day at the time of starting. Now it's dairy milk collection; increased to 11 lakes liters per day. It is also working as a listen between milk producers of; villagers and consumers of the towns buy providing reasonable price to the producers to maintain stable markets.

OPERATION FLOOD:

In our state operation Flood was divide into three based as "Anand Level"

1. Village Level
2. District Level
3. State Level

OPERATION FLOOD PROGRAM:

Indian dairy development Co-operation owns the responsibility of implementation of operation flood program, which provides money assistance up to 70% towards loan and 30% as subsidy. National Dairy Development Co-operation selected Districts of the state for implementation of operation flood.

Districts selected under operation flood programs:

Name of the District	Mandal
Srikakulam	Visakha
Vijayanagaram	Visakha
Visakhapatnam	Visakha
East Godavari	Godavari
West Godavari	Godavari
Krishna	Krishna

Guntur	Guntur
Prakasam	Prakasam
Chittor	Chittor
Cuddapah	Cuddapah
Kurnool	Kurnool
Medak	Medak
Nizamabad	Nizamabad
Nalgonda	Nalgonda
Ranga Reddy	Ranga Reddy

Details of milk production sectors in A.P:

Number of Co-operative Societies	4857
Number of other centers	4297
Total collection centers	9154
Number of milk procurement routes Villages	10,249
Producers	886,800
Number of Milk Chilling Centers	67
Number of district Dairies	9
Number of Milk Powder Plants	7
Number of Cattle feed Plants	8

OTHER MILK DAIRIES IN ANDHRA PRADESH:

- Vishaka
- Tirumala
- Model
- Heritage
- Vijaya

CHAPTER - III

PROFILE OF CREAM LINE DAIRY PRODUCTS LIMITED HANUMANJUNCTION

- **History:**

Cream line Dairy Products Limited (CDPL) is a leading Private Dairy player in Southern India with its operations spanning across Telangana, Andhra Pradesh, Tamilnadu, Karnataka and Nagpur in Maharashtra. Its products are sold under the brand name `Jersey'. Since inception in 1986, the company has been growing consistently under the visionary leadership of Promoter Directors, an efficient Operating team and the unrelenting efforts of committed workforce.

The company has excellent infrastructure at strategic locations comprising of 34 Milk Chilling Centers, 8 Associate Milk Chilling Centers. 84 Bulk Milk Cooling units, 6 Composite Dairy Plants and one state of the art milk powder plant at Ongole. While all the dairies are ISO 22000 certified, the powder plant also has a certification from Export Inspection Agency qualifying the `Jersey' products for exports. The combined processing capacity of milk & milk products is 9.76 LLPD which includes 1.50 LLPD of drying facility at Ongole, A.P. The company markets its products through a well laid distribution network comprising of distributors, agents, parlors and exclusive franchise outlets. More than 5000 agents currently sell the milk and milk products of Creamline. Its cultured milk products consisting of Curd, Lassi and Butter Milk has, within a short span of time, captured a significant market share and enjoys a high brand equity amongst the consumers. CDPL constantly endeavors to delight its customer ranging from household to HORECA and prestigious institutions with its quality of products and continuous innovation. The company achieved a turnover of 8580 million in the FY 2014-15.

CDPL became a subsidiary of M/s Godrej Agrovet Limited, the largest manufacturer of animal feed in the country, after having acquired a majority stake of more than 51% equity in December 2015. CDPL is now strategically positioned to fully leverage the potential and function as an end to end provider in the entire agri value chain. The company has chalked out ambitious growth plans both organic and inorganic, while also expanding its product portfolio with more value added products.

Vision& Mission:

- ✪ **VISION:**

"To emerge as a Leader in Dairy Foods with Global Presence through Business Excellence and ensuring Customer Delight"

- ✪ **MISSION:**

"To grow consistently, offering value added Dairy Products and gain customers' confidence through innovative practices"

Values:

"We act with a sense of pride adopting ethical practices and compassionate approach"

Objectives:

- Lowest Cost of Operation.
- Evaluates systems and practices
- Self-sufficiency in procurement
- Leadership position in market
- Innovation in process and product

Symbol:

Slogan:

"Have Fun…..Be Healthy,"

Organization structure:

Role of Board of Directors:

Mr.Nadir Godrej

Chairman

Mr. Nadir Godrej is the Managing Director of Godrej Industries and Chairman of Godrej Agrovet. He is also a Director of numerous firms including Godrej & Boyce Co Ltd, Godrej Consumer Products Ltd, Indian Hotels Co Ltd and Mahindra & Mahindra Ltd.

Currently, Nadir is the President of Alliance Françoise de Bombay. For his contribution to Indo-French relations, the French Government has honored him with the awards of "Chevalier de l'Ordre National du Mérite" and "Chevalier de la Légiond'Honneur".

K. BHASKAR REDDY

Mr. K. Bhaskar Reddy graduated in Dairy Technology from Osmania University in 1983 and completed his Executive MBA programme from Indian School of Business (ISB) – Hyderabad in the year, 2013. Being a first generation entrepreneur and with hardly any funds at his disposal, he toiled a lot initially in establishing first private dairy in the state of Andhra Pradesh in 1986.

M. Gangadhar

Finance Director

Mr. M. Gangadhar serves as Director - Finance of Creamline Dairy Products Ltd. Mr. Gangadhar worked for 5 years in Sangam Dairy as DGM (Finance) and served reputed private sector companies for 5 years before joining CDPL. Mr. Gangadhar is also representing the Private Dairies as Member on the Committee appointed by the Government of Andhra Pradesh to study the recommendation of the House Committee on reopening Chittoor Dairy and Ongole Dairy.

D.ChandraShekar Reddy

Mr. D. Chandra Shekher Reddy is a graduate in Dairy Technology from Osmania University. He worked as Technical Officer in "Sabarkantha District Milk Producers Union Limited", popularly known as SABAR DAIRY, part of AMUL organization for 1&1/2 years. His vast experience in processing of various milk products and expertise in technical, plant maintenance and operations are put to effective use to strengthen the technical aspects of the company. He attended AnugaFoodtec at Cologne, Germany - Worlds most important trade fair for food and drink technology.

C.BalrajGoud

Mr. C. BalrajGoud hails from KamareddyMandal, Nizamabad District, A.P. and is a first generation entrepreneur. Graduated from Osmania University with Rural Industrialization as his main elective. He completed L.LB from MaratwadaUniveristy, Nanded. He pursued successfully his Post Graduation with Geography as specialization from Osmania University. He was very active in sports, NSS and NCC in School & College. He was awarded 'C' Certificate with 'A' Grade in NCC. He had successfully completed the Parachuting National Camp, Agra in 1980.

Balram Singh Yadav

Balram serves as Managing Director of Godrej Tyson Foods and is also the Chairman of the Compound Livestock Feed Manufacturers Association of India. He is also the Director of many other firms, including ACI Godrej, Creamline Dairy Products, Polychem Hygiene Laboratories and Aadhar Retailing. Balram started his career with Godrej as a Management Trainee. His first role was Branch Executive at Khanna in 1991. Over the years, he handled increasing responsibilities as Deputy Sales Manager, Factory Manager, Operations Manager and Deputy General Manager.

S. Varadaraj

Mr. S. Varadaraj is Head, Finance, Systems and Legal, Godrej Agrovet Limited (GAVL). Varadaraj took over as the Head of Finance and Systems in 2005. In 2010, he also took on the additional responsibility of the Legal and Secretarial functions of GAVL and its group companies. A Commerce graduate and a Chartered Accountant, Varadaraj is also a qualified Cost Accountant and holds a Master's degree in Financial Management. He joined GAVL as a Management Trainee in May 1994.

MangeshWange

Mr. MangeshWange is Head, Animal Feeds Business, Godrej Agrovet Limited (GAVL). Mangesh has been responsible for driving the entire operations for the

Animal Feeds Business since 2013. He is also the Vice Chairman of the Compound Livestock Feed Manufacturers Association of India.

Milk Production Flow Chart

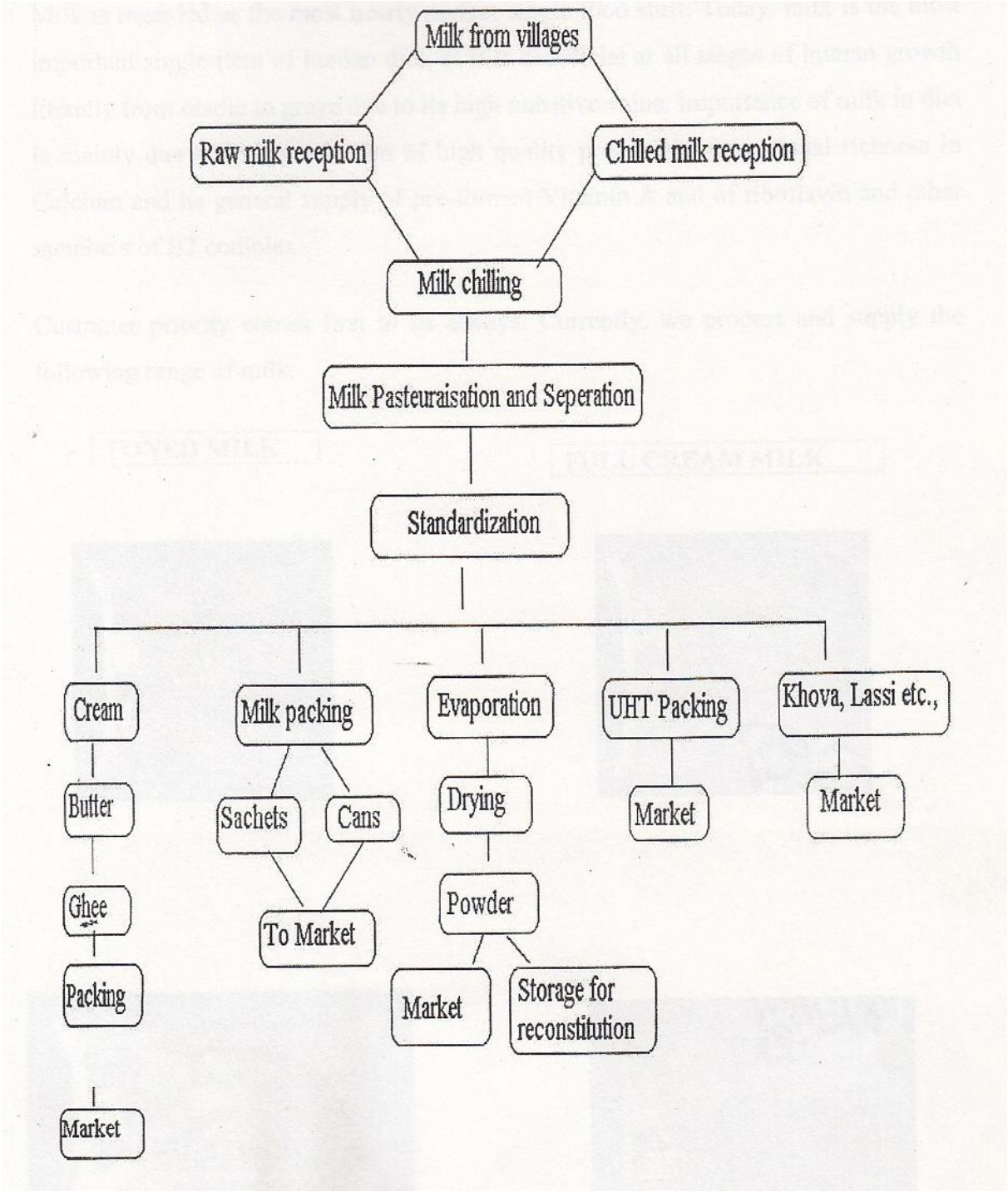

PRODUCTS:

Milk is regarded as the most nearly perfect single food stuff. Today, milk is the most important single item of human diet, as it is beneficial at all stages of human growth literally from cradle to grave due to its high nutritive value. Importance of milk in diet is mainly due to its contribution of high quality protein, its exceptional richness in calcium and its general supply of pre-formed vitamin A and riboflavin and other members of B2 complex.

Customer priority comes first to us always. Currently, we process and supply the following range of milk.

FRESH TONED MILK

PREMIUM TONED MILK

BANDAN TONED MILK

SUPER FULL CREAM MILK

RICH FULL CREAM MILK

GOLD STANDARDISED MILK

HEALTHI DOUBLE TONED MILK

FARM COW MILK

Slim- Skimmed Milk

Amrit- UHT Sterilized Toned Milk

Enrich- Toned Milk

MILK PRODUCTS:

- ***CURD:***

JERSEY curd is prepared with fresh quality milk under the Influence of lactic acid bacteria at around 400c. The milk, inoculated with bacterial culture, is hygienically packed in clean food grade plastic cups and sealed by an automated packing machine prior to incubation. After curd achieved the desirable properties, it is kept at chilled temperature until delivered to customer. JERSEY curd is a fresh, safe, hygienic and tasty product which has all nutritious goodness of milk.

JERSEY CURD is available on quantities of 100g, 200g, and 500g with a shelf life of 7 days at chilled storage conditions

- **FLAVORED MILK:**

Flavored milk is made from sterilized double toned milk which consists of 1.5% fat and 9.0% SNF. It is available in different flavors such as badam, strawberry, banana and chocolate. The sugar is also added to enhance the taste.

JERSEY flavored milk is available in glass bottles of 200 ml and shelf of 6 months.

- **SWEET LASSI:**

Sweetened Lassi is also the most popular cultured milk beverage. It is prepared using fresh pasteurized standardized milk curd. Sugar is added and homogenized to give excellent mouth feel. Lassi contains appreciable amounts of milk proteins and phospholipids.

- **GHEE:**

Ghee is very popular milk product and is widely consumed with regular meals. It has unique pleasant flavour and grainy texture. Ghee is pure clarified butter fat with negligible moisture content. Ghee has high nutritive value with fat-soluble vitamins (A, D, E & K) .It is widely used for shallow and deep frying of food. Countless indian sweetmeats based with cereals, milk solids, fruits and vegetabvle are cooked in ghee.

JERSEY GHEE is available in 200g, 500g, and 1 L packs and has a shelf lilfe of 3 months. Bulk quantity also available in 15 kg tins

- **DOODH PEDA:**

Doodh peda is a desiccated sweetened product made from fresh milk and contains 45% milk solids and 35% sugar. It is slightly brownish white ion color and has

coarse grainy structure. The product is hygienically packed. Doodh peda is a nutritious product with delicious taste and having a shelf life of 7 days.

- **PANEER*:***

Paneer is a healthy, protein-rich food. It is a pure coagulated milk product made from fresh milk of 6% fat and 9% SNF. Paneer is formed when milk is precipitated by adding sour milk, lactic acid or citric acid. It is most common from of Indian cheese and is a high protein food. So, paneer is often substituted for meat in Indian vegetarian cuisine.

Panner is packed ans sold in 200g, 500g and 1kg poly packs. It has a shelf life of 1 month.

- **COOKING BUTTER:**

Cooking Butter is the butter obtained from cream without any additives like salt, colouring or flavouring agents. It is concentrated form of milk fat. It contains more than 82% molk fat, 1.5% curd and 16% moisture. It is very high in fat which contains fat-soluble vitamins A,D,E and K.

JERSEY COOKING BUTTER is available in 200g, 500g and 1kg poly packs. It has a life of one month deep freeze storage temperatures. Butter also available in bulk packs in 20kg carton form.

CORPORATE

H.NO.6-3-1238/B/21,Asif Avenue

Rajbhavan Road, Hyderabad-500082.

Ph.040-23412323

Fax:23412323

HEAD

REGIONAL OFFICES
HYDERABAD 1-11-251/19/A3, 3rd Floor motilal Nehru Nagar, Begumpet, Hyderabad 500016. Ph:(+91) 040 27760731,27760808, 27760809, 27767233
VIJAYAWADA 56-10-14,P&T Colony 3, Behind ZPH School PantaKalava Road Patamata, Vijayawada-520010 Telefax : (+91) 0866 2555436
CHENNAI H.No.4,Murugan Koil First street Vivekananda Nagar Kolathur, Chennai 600099. Ph(+91) 044 26510051 Fax:(+91) 044 26510065
BANGALORE #1030,16th 'c' Cross ,14th Main, HBR Layout, 1st Stage, 5th Bloch, Bengalore-560043 Ph:(+91) 080 22726389 Fax:41253773
NAGPUR 143, ThakerBhavan, Abhayankar Nagar Nagpur-440010 Ph:(+91) 07125681858 5681859

QUARTERS:

HANUMAN JUNCTION PLANT PROFILE:

Began operations on 4th April, 2004, after take over from milkoma brand with initial capacity of 25000 lters. Located at Epuru village near Hanuman junction in west Godavari district having operations in costal districts of A.P in Prakasam,

Krishna , Guntur west Godavari and East Godavari, apart from Khammam and part of Nalgonda in Telangana. The present plant capacity is 1.05 lack liters per day and expantion to 1.5 lack liters is under progress. present having eight own milk chilling centers and seven bulk milk cooling units in four districts achieved average sales of 77000 liters per day in current financial year 2017 - 18. All major market covered in the districts in all parts of operations. The marketing office is located at Vijayawada and branch offices are in Eluru, Rajahmundry and Kakinada , an exclusive product block with state of art technology is established for cultured products and other products like paneer, doodpeda, cooking butter and other milk based sweets.

ACHIEVEMENTS:

- Best sales office award for 2007-2008 and best buffalo milk chilling centre awards for years consequently.

OBJECTIVES:

- Self sufficiency in procurement.
- Achieving one lack liters sales for next year.
- Interaction of all products in the markets under operational area.

MILK CHILLING CENTERS:

Milk chilling centers	LPD
Hanuman Junction	5468
Machilipatnam	10804
Penugachiprolu	2011
Repalle	4599
Tadepalligudem	7135
Tadikalapudi	10639
Kaikaluru	2709
Narasapuram	4907
Vissannapet(NRP)	3725
Yakamuru	1801
Buttaigudem	4041
Chelluru	10617
Kothapeta	4116
G.ragampet	1521

FINANCIAL PERFORMANCE REVIEW:

Year	2014-15	2015-16	2016-17	2017-18	2018-19
Fixed assets	5355.73	6335.30	6828.45	8457.17	10203.96
Turnover	19925.75	25002.25	33471.72	38455.11	44781.93
Profit after tax	205.12	457.04	491.00	726.54	958.11
Net worth	2325.52	2748.87	2964.29	3659.12	4773.55

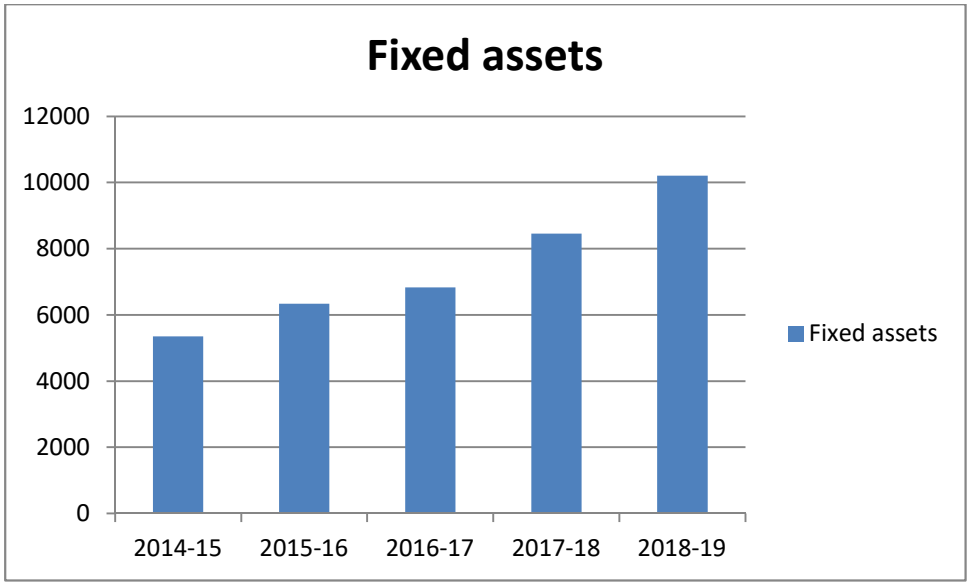
Fixed assets
12000
10000
8000
6000
4000
2000
0
2014-15
2015-16
2016-17
2017-18
2018-19
Fixed assets

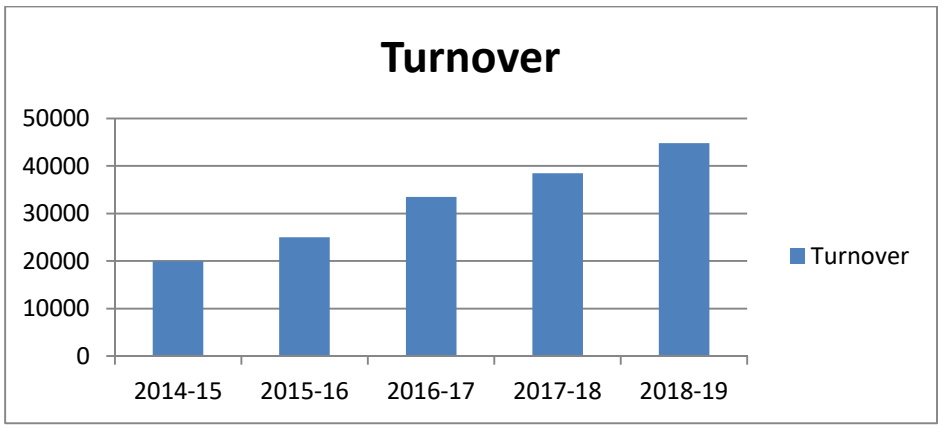
Turnover
50000
40000
30000
20000
10000
0
2014-15
2015-16
2016-17
2017-18
2018-19
Turnover

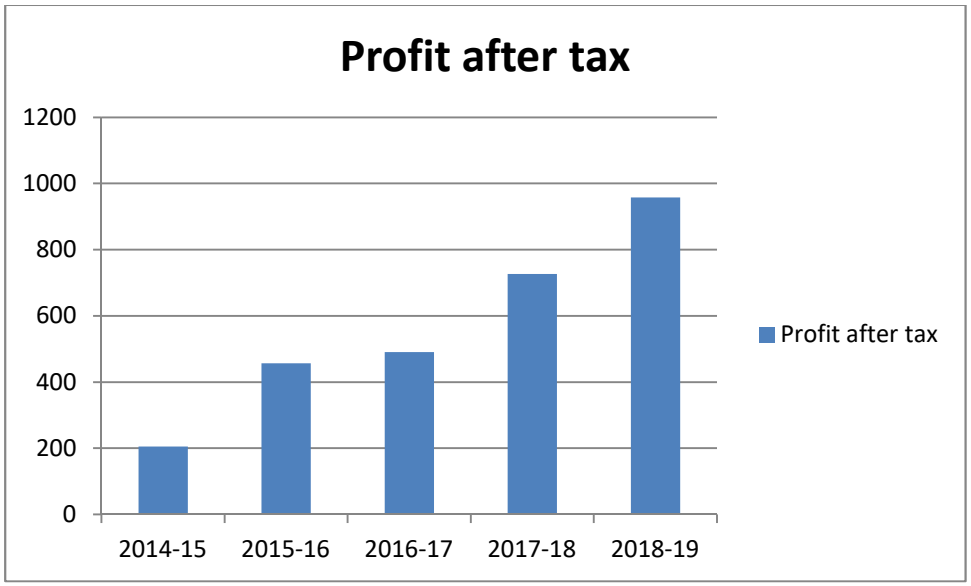
Profit after tax
1200
1000
800
600
400
200
0
2014-15
2015-16
2016-17
2017-18
2018-19
Profit after tax

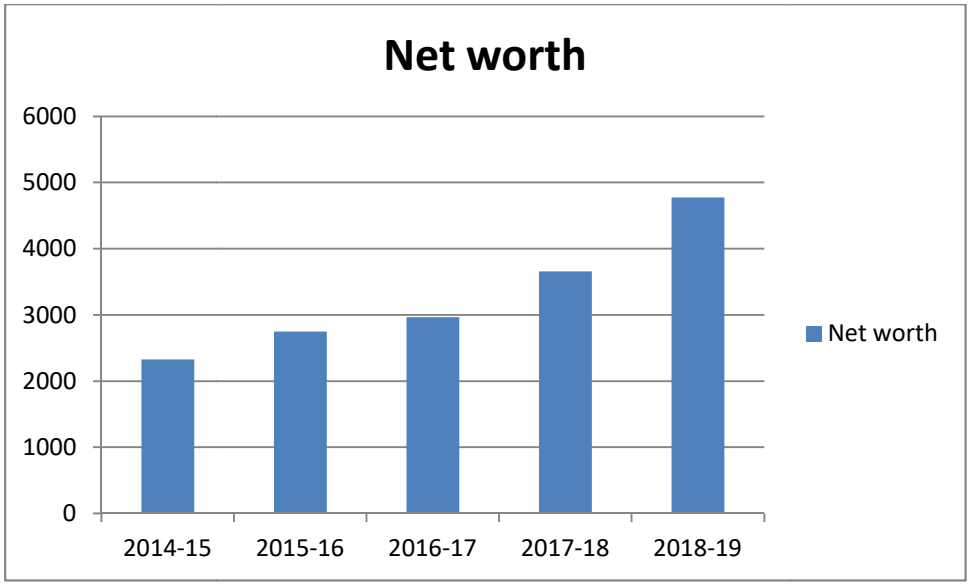

- **Competitors:**

DODLA DAIRY **TIRUMALA DAIRY**

Heritage dairy **Model dairy**

MILESTONES AND CREDENTIALS:

- Won **Best Vendor in Hospitality Sector Award** by Taj Group in 2004.

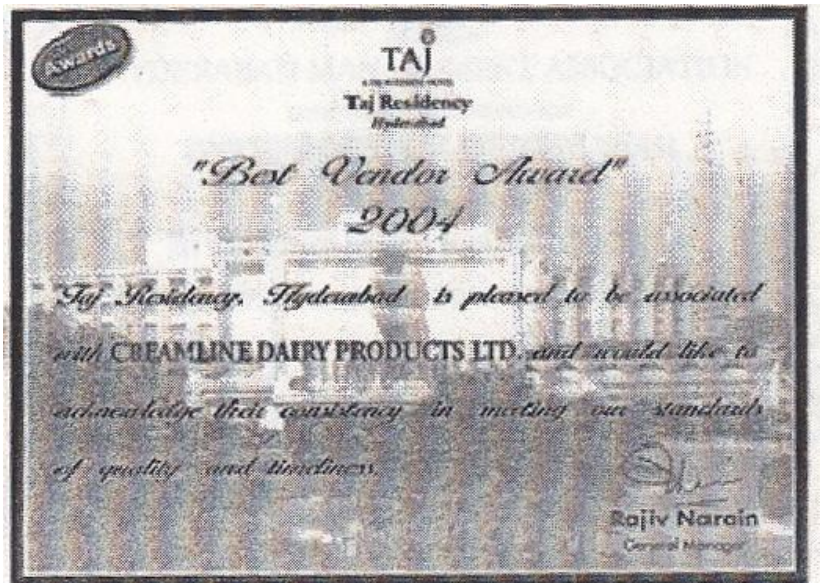

- Accredited with ISO **9000 certification** in 2002

Won **Entrepreneur of the year 2001 Award** from Hyderabad Management Association.

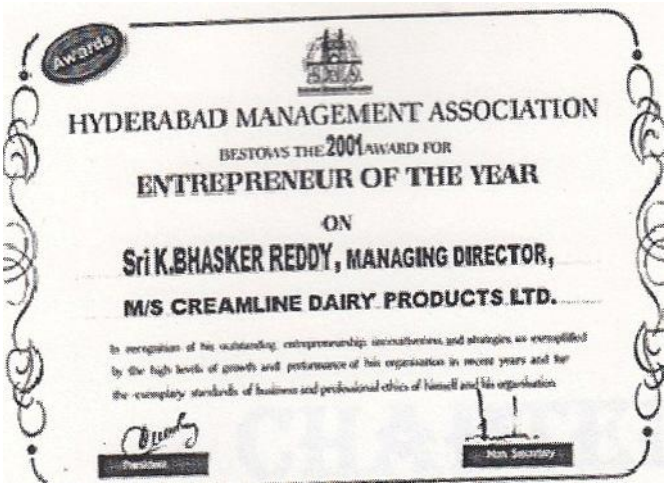

- Entered into strategic partnership with Godrej Agrovet Limited
- Introduced “Round the clock parlors” and “Mobile milk testing centers”.
- Trusted supplier of dairy products to G.E capital-Habsiguda and Cyber Gateway, Wipro- Madhapur & Manikonda, IIIT-Gachibowli.

CHAPTER - VI

THEORITICAL FRAMEWORK

INVENTORY:

Inventory usually refers to the value of stocks, as distinct from fixed assets. An inventory would include items which are held for sale n the ordinary course of business or which arein the process of production for the purpose of sale, or which are used in the production of goods or services which will be for sale.

A tangible property held finished goods, work in progress, raw material including maintenance, and consumables.

INTRODUCTION:

The term inventory comprises raw material, work in progress, finished goods and stores and spares. Inventory represents a significant portion of assets in the case of most of the manufacturing firms and require substantial investments.

Inventory management is concerned with the determination of optimum level of investment for each component, and the operation of an effective control and review mechanism.

Inventory represents a continuum of possible investment its different items carry with them different risks to the firm. Such different risks have to be analyzed in funds invested in inventory is the link impact on investment and costs. The opportunity cost of funds invested in inventory is the link by which the finance manager ties inventory optimal level of average inventory and the optimal order quantity must be kept lower. Other things remaining constant, this is possible when the opportunity cost of funds invested in inventory is higher.

"Inventory" too many small business owners is one of the more visible and tangible aspects of doing business. Raw materials. Goods in process and finished goods all represent various forms of inventory. Each type represents money tied up until the inventory leaves the company as purchased products.

INVENTORY MANAGEMENT:

The inventory refers to the stock pile of the product a firms offering for sale and the components that make up the product. In other words, Inventory is composed of assets that will be sold in future in the normal course of business operations.

⇨ Components of Inventory:

i. 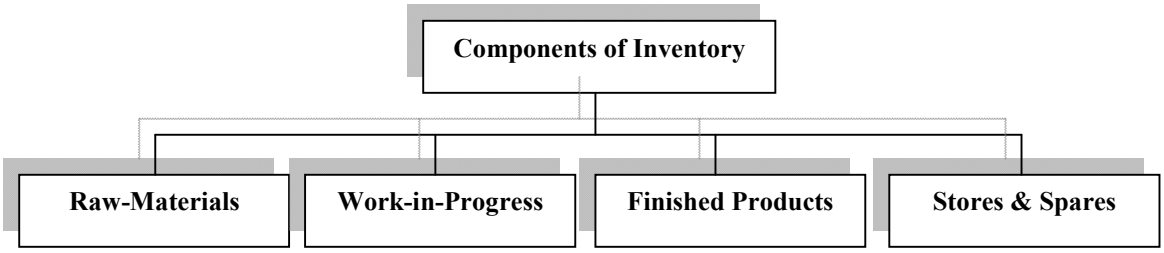

ii. ***Raw-materials:*** Raw-materials are the components that are used in the making of a product. It is the basic material that is used in the manufacturing of a final product.

iii. ***Work-in-Progress:*** It is that the stage of stocks that are between raw-materials and finished goods. Work-in-process inventories are semi-finished products.

iv. ***Finished Products:*** Finished goods are that have completed the manufacturing process but have not yet been sold or distributed to the end user.

v. ***Stores and Spares:*** Stores and spares inventory (include office and plant cleaning materials like soap, brooms, oil, fuel, light, bulbs etc.) are those purchased and stored for the purpose of maintenance of machinery.

⇨ OBJECTIVES OF INVENTORY MANAGEMENT:

- ✪ Ensure a continuous supply of raw-materials and supplies to facilitate uninterrupted production.
- ✪ Maintain sufficient stocks of raw-materials in periods of short-supply and anticipate price changes.
- ✪ Maintain sufficient finished goods inventory for smooth sales operation, and efficient customer service.
- ✪ Minimize the carrying costs and time.
- ✪ Control investment in inventories and keep it at an optimum level.

IMPORTANCE OF INVENTORY:

Inventory plays cardinal role in every organization. The profit of the organization mainly depends on the inventory. Inventory is the second largest value in the organization. It is the liquid asset and the current asset of the organization. Inventory storage is an important activity in the organization.

CAUSES OF INVENTORY:

External causes: - Customers, Suppliers etc.

Internal causes: - Market, policy, production and SCM.

PROBLEMS WITH HIGH INVENTORY:-

1. Interests, Insurance costs.
2. Quality deterioration.
3. Wear and tear.

METHODS OF VALUATION: course 4

The government of India has given sufficient flexibility for the companies to introduce scientifically developed methods of valuation of their stocks. In order to prevent malpractices, it has been stipulated that such methods must be studied and approved by the Board of Directors, and must be followed for a minimum prior of three years. The various methods of valuation available are given below:

- First in first out (FIFO)
- Last-in-first-out (LIFO)
- Periodical simple average method
- Normal cost/ standard cost method
- Weighted average method
- Replacement price method

FIRST-IN-FIRST OUT:

Under this method is first issued from the earliest consignment on hand and priced at which that consignment was placed in the stores. In other words materials received first are issued first. This method is most suitable in times of falling prices because the issue price of materials to be jobs work orders will be high while the cost of replacements of materials will be low.

LAST-IN-FIRST-OUT:

The issues under this method are priced in the reverse order of purchase i.e. the price of the latest available consignment is taken. This method is sometimes known as the replacement cost method because materials are issued at the current cost to work orders expect when purchases were long ago. This method is suitable in times of raising prices because material will be issued from latest consignment at a price which is closely related to the current price levels.

PERIODICAL SIMPLE AVERAGE METHOD:

"A price which is calculated by dividing the total of the prices of the material to be priced could be drawn by number of the prices used in that total". Simple average price is calculated by dividing the total of unit purchase prices of different lots in

stock on the date of issue by the number of prices used in the calculation and quantity of different lots is ignored. This method may lead to over-recovery or under-recovery of cost of materials from production because quantity purchased in each lot is ignored.

STANDARD COST METHOD:

Standard price is the predetermined price and both the receipts and issues will be valued at this price. Therefore, this price is neither the cost price nor the market price. The method is used by concerned which follow standard costing. The difference between the actual purchase price and the standard price is charged to an account known as "Purchase Price Variance Account".

WEIGHTED AVERAGE METHOD:

"A price which is calculated by dividing the cost of materials in the stock from which the materials to be priced could be drawn by the total quantity of materials in that stock". The weighted average price takes into account the price and quantity of the materials in store.

REPLACEMENT PRICE METHOD:

This is a modern method developed by George Tarboro. However without application it is difficult to price each item. This has not yet become popular and acceptable to the government tax authorities.

LOCATION AND LAYOUT:

More often than not, in the matter of locating the stores, materials management is rarely consulted. The normal practice is to locate the stores near the consuming departments. This minimizes handling and ensures timely dispatch. In stores layout, governing criteria are easy movement of materials, good housekeeping, and sufficient space for men and materials handling equipments, such as shelves, racks, pallets and proper preservation from rain, light and other such elements.

These problems are more important in the case of items that have a limited shelf life. Other important factors governing the location are the number of users and their locations, the volume and the variety of goods to be handled the location of the central receiving section and accessibility to modes of transportation such as rail or road.

Since stores have to be nearest to the sugar, large organizations usually have stores near consuming department, whereas receiving is done centrally. Items of

common usage are stocked in the central stores so that inventory is kept at an optimum level. These factors are considered at the planning level of layout.

In the case of warehouses stocking finished goods, factors such as proximity to ports, railway lines, quality of roads, availability of power, etc., become quite important. It is also important that the stores are constructed with a futuristic orientation, so that sufficient flexibility for expansion needs is inbuilt.

The activities of receiving the goods, stocking in appropriate locations, material Handling and issue must be done swiftly and economically. The stores building have adequate facilities for preservation of stores.

Sometimes facilities, such as cold storage, heating equipments, air conditioning and similar facilities may be required. These should be planned in advance. Comfortable working conditions must be provided to the stores personnel to get maximum efficiency and morale.

The Important factors in the design of stores building can be summarized as follows:

LIGHTING:

Clear and adequate lighting is a must for a work environment. Lighting effects can be accentuated through a judicious choice of colors for the walls. For stores personnel who workday in and day out in the stores receiving, checking, stocking, handling and issuing goods, a pleasing environment goes a long way in reducing monotony. Any attempt to reduce these facilities will prove false in economizing in the long run.

SAFETY:

This factor is perhaps the most important aspects. In stores a large volume of goods are handled every day. Accidents considerably reduce the morale and effectiveness of the system. The following measures are necessary if accidents are to be checked:

1. Safety consciousness should be instilled in the minds of stores, personnel through training programmers, visual aids and literature.
2. Safety appliances, such as goggles, hand gloves, etc…, must be provided and their use must be encouraged.
3. Good housekeeping is essential. This means that gangways must be clean, adequately wide so that movement of forklifts, trolleys and Industrial tractors are smooth. Stocking must be in appropriate locations So that handling is minimum.

4. All stores equipment must be kept in good order. This Includes adequate maintenance practice with regard to forklifts, overhead cranes, trolleys, conveyors, etc. Operation must be trained in safety so that safety precautions are not overlooked.

5. Healthy competition can be stimulated by installing “safety awards” and cash prizes which bring recognition to the concerned stores personnel for safety practices. This also motivates other to practice safety.

COST ASPECTS AND PRODUCTIVITY:

It is erroneously covered that every cubic meter of space must be utilized by stocks for high efficiency. Very often such stocking may drastically cut the speed of materials movements and create bottlenecks apart from affecting overall safety. Therefore maneuvering needs for handling equipment and for minimizing the time required for stocking, and issue, must be borne in the mind at the planning stage in order to ensure real efficiency. Costs involved in stores can be analyzed under two heads, viz.., fixed and variable. Fixed costs are to be incurred irrespective of the utilization of space stores. They include money spent on land and buildings, rent interest, repairs, maintenance, insurance, etc.

Variable costs vary with the volume through output. They consist of handling cost, damages, deterioration, obsolescence, etc. Obviously when the throughout or the volume goods handled is high, the total cost per tone is low. This should be the aim of the store’s manager in order to optimize the costs in stores.

ROLE OF FINANCE MANAGER IN INVENTORY MANAGEMENT:

Optimum level of inventory and finding ensures to the problems of EOQ are the recorder point and the safety stock. These techniques are very essential to economize the use of resources by minimizing the total inventory cost. The techniques of inventory management are very useful in data mining. The cases the board frame works for maintaining inventories.

To the majority of the companies, inventory represents a substantial investment. Thus the goal of wealth maximization is related to the financial manager has an important role to play in the management of inventory. The financial should see that only an optimum amount is invested in inventory. He should be familiar with in

inventory control techniques and ensure that inventory is managed well. Effect would be reduce inventory investment and increase the firm's prospects of making profits.

INVENTORY CONTROL: course 5

Inventory control renders to "The process whereby the investment in materials and parts carried in stock is regulated within predetermined limits set in accordance with the inventory policy established by the management. Inventory control refers to a planned method of purchasing and storing the material at lowest possible cost without affecting the sales scheduled.

Inventory control therefore, is a scientific method of determining what, when and how much to purchase and how much to have to stock for a given period of time.

THE NEED FOR INVENTORY CONTROL:

The rewards of inventory control system cannot be over looked in the Indian context the idea behind this is,

- Conserving valuable foreign exchange.
- Release of capital.
- Reduction in cost.

THE PRIMARY OBJECTIVE OF INVENTORY CONTROL:

- To minimize the idle time caused by shortage of inventory and inventory Availability of inventory.
- To keep down capital investment in inventories. Inventory carrying cost and obsolescence losses.

INVENTORY MANAGEMENT TECHNIQUES:

Inventory control techniques

↓

Selective Inventory Control Techniques

1. ABC Analysis
2. XYZ Analysis
3. VED Classification.
4. FNS Classification.
5. SOS Classification.

Inventory Management

1. EOQ (Economic Quantity)
   - A. Ordering Cost.
   - B. Carrying Cost.
2. System of Re-ordering.

6. S-D-E Analysis
7. HML Analysis

- **Economic Order Quantity:** One of the major inventory management problems to be resolved is how much inventory should be added when inventory is replenished. If the firm is buying raw materials, it has to decide lots in which it has to be purchased on cash replenishment.

These problems are called order quantity problem and task of the firm is to determine optimum inventory level involves two types of costs:

1. Ordering cost
2. Carrying cost.

The economic order quantity is that inventory level, which minimizes the total of ordering and carrying costs.

ORDERING COSTS*:* The term ordering cost is used in case of raw materials (or supplies) and includes the entire costs of acquiring raw materials. They include costs incurred in the following activities. Requisitioning, purchase ordering, transport receiving, inspecting, and storing(store placement), ordering cost increase in proportion to the number of orders placed the critical and staff costs, however, don't vary in proportion to the number orders placed, and one view is that so long as they are committed cost they need not to be revoked in computing ordering cost.

Carrying costs: Cost incurred for maintaining a given level of inventory are called carrying cost, they include storage, insurance, taxes, deterioration and obsolescence's

$$EOQ = \sqrt{2AO}/C$$

EOQ=Economic Order Quantity

A=Total annual requirement for the item

O=ordering cost per order of that item

C=carrying cost

IMPORTANCE OF EOQ: course 6

In a real situation demand is never deterministic even if demand remains known over a range of problem values the starting point for a design of an inventory system is 'EOQ' even though by itself it is hot an inventory system another importance of 'EOQ' is its justifying the conventional ABC and also elaborating it.

EOQ = S(M. Co)/ SCc

The annual orderin cost is them = MCo / EOQ

The annual carrying cost is = (EOQ / 2) S.Cc

The total inventory cost per annum becomes = MCo/EOQ +(EOQ/2) S.Cc.

ASSUMPTION OF EOQ:

- The firm knows with quantity the annual consumption of a particular item of inventory.
- The rate of consumption is steady over time.
- The orders placed to replenish inventory are received at exactly that point in time when inventories reach zero.
- The ordering and carrying costs are constant over the range of possible inventory levels.

GRAPHICAL REPRESENTATION OF EOQ: The order costs and inventory carrying cost have been plotted with respect to the quantity in lot. Total cost is calculated by adding ordering cost and inventory carrying cost. Total cost is minimum at the point Q and thus Q

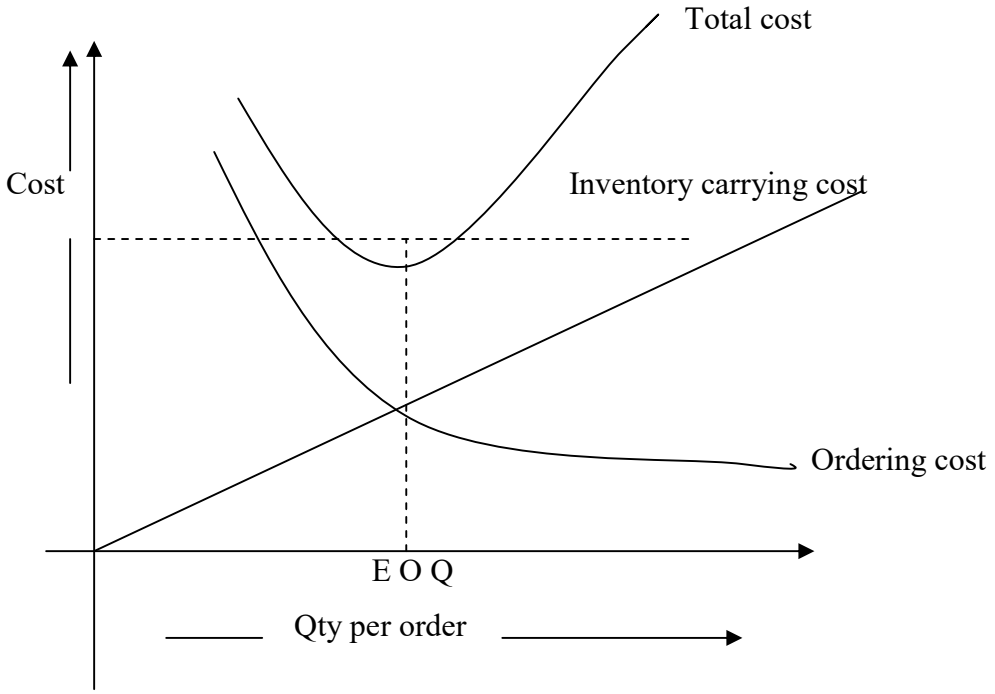

This cost varies nearly 10 to 20% of the product cost. The economic ordering quantity is obtained by the quantity whose ordering cost is equal to inventory carrying cost.

A = Total items consumed per year.

O = Ordering cost per order.

C = Annual inventory carrying cost per item.

Q = Economic ordering quantity.

Ordering cost per year = No. of orders placed in a year X cost per order

$$= \frac{A}{Q} \times O$$

Course 7

ABC ANALYSIS: ABC Analysis is one of widely used inventory control tool. Under this we have to classify materials according to their importance and concentrate more on critical items. Importance of any item arises due to the two factors namely, consumption values and critically in use. Classification of materials according to importance has its basis on the promise "Vital Few and Trivial Many".

A CLASS ITEMS:

A Class items are those which account 10 to20% having usage value of 70 to 80%. Thus a high test control should be exercises on "item" A.

B CLASS ITEMS:

As per the theory 20 to 30% of items account for the same percentage of value. These are less important than A class items but are costly enough to warrant more attention to their consumption. These items cannot be over looked but need lesser degree of control than those in class A.

C CLASS ITEMS:

The usage value of the C class items are low so there is a lesser and no need for strict control when there is a need. For these items order in large quantity. The following figures bring out the clearly the concept of ABC Analysis.

Category Value	Item 10%	% of Annual
A Item	10	70
B Item	20	20
C Item	70	10

XYZ ANALYSIS:

X-Y-Z analysis is based on the value of stock on hand.

X= High Inventory value items

Y=Medium Inventory value items

Z= Low inventory items

VED CLASSIFICATION:

This analysis is done not on inventory value basis on critically the analysis classifies the items in to 3 groups

V=Vital items

E=Essential items

D=Desirable items

Vital category encompasses those items for want of which production would come to halt. Essential group includes items whose stock outs cost is very high.

Desirable group comprises of items which do not cause any immediate loss of production or their stock out entail nominal expenditure and cause minor disruption for a short duration.

FSN CLASSIFICATION:

It is based on the consumption of the items. The items under this analysis are classified into 3 groups.

- F-Fast moving
- S-Slow moving
- N-Non moving

To conduct the analysis the last date of receipt on the date of issue whichever is later taken into account and the period, usually in terms of number of months that has elapsed since the last movement is recorded.

S-OS CLASSIFICATION:

Nature of supplies and seasonality of the items and it classified the items in two groups

- S-Seasonal
- OS-Off seasonal

Procurement and holding strategies for seasonal items like agricultural products.

S-D-E ANALYSIS:

S-D-E Analysis is based on problems of procurement namely.

- Non availability
- Security
- Longer lead time

- Geographical location of suppliers
- Reliability of suppliers etc.

S-D-E Analysis classifies the items into 3 groups called “Scare”, “Difficult”, and “Easy”. The information so developed is then used to decide purchasing strategies. “Scare” classification comprises of items which are in short supply imported through government agencies. “Difficult” classification includes those items which are available indigenously but are not easy to produce. “Easy” classification covers those items which are readily available.

CHAPTER - V

DATA ANALYSIS AND INTERPRETATION

➢ EOQ Analysis:

$$EOQ = \sqrt{2\,AO/C}$$

A=Annual consumption

O=ordering cost

C=Carrying cost

Statement showing the EOQ of CLDPL during a period of five years from 2010-15

Year	Annual consumption	Ordering cost	Carrying cost	EOQ
2014-15	5752.69	35710.42	650.49	794.74
2015-16	6453.21	40912.13	811.30	806.23
2016-17	5196,79	32517.35	640.50	726.40
2017-18	5935.72	40135.23	770.59	786.32
2018-19	6110.12	45921.21	805.29	834.76

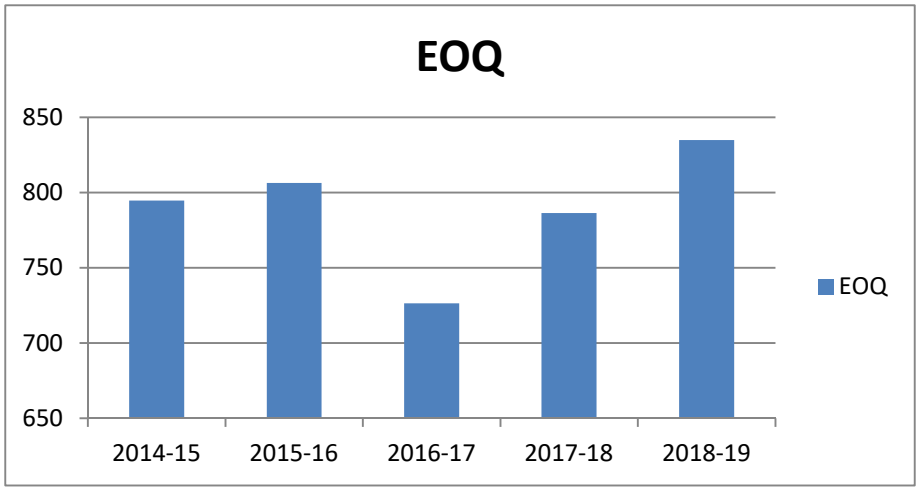

INTERPRETATION:

Economic order quantity of Cream line dairy products limited during the period of 2015 - 16to 2014-15 in the year 2014-15 is 834.76; this is the highest economic order quantity value. Lowest economic order quantity value in the year 2016 - 17is 726.40 .In the year 2015 - 16 is 794.74, in the year 2015 - 16is 806.23, in the Year 2016 - 17is 726.40, in the year 2018 - 19 is 786.32 and in the year 2014-15 is 834.76 we rerecorded.

Re-order level:

Reorder level=maximum usage*maximum delivery time

Statement showing the Re-order level of CLDPL during a period of five years from 2014 - 19 (In Rupees)

Year	Max usage	Max delivery time	Re-order level
2014-15	5792	14	81088
2015-16	6490	17	110330
2016-17	5201	19	98819
2017-18	6085	21	127785
2018-19	6218	24	149232

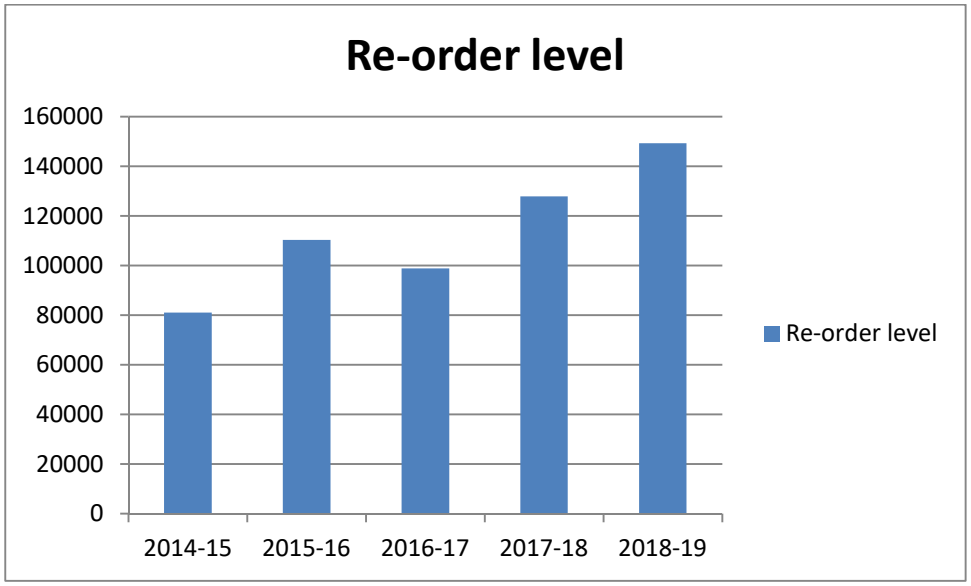

INTERPRETATION:

Re-order level of **Jersey Cream line dairy products limited** during the period of 2015 - 16 to 2014-16 in the year2014-15 is 149232 is the highest Re-order level. Lowest Re-order level in the yearto2015 - 16 is 81088.

MINIMUM STOCK LEVEL:

Minimum stock level = re-order level-[average usage *avg reorder period]

Statement showing the Minimum stock level of CLDPL during a period of five years from 2014 - 19

(In Rupees)

YEAR	RE-ORDER LEVEL	AVG USAGE	AVG REORDER PERIOD	MINIMUM STOCK LEVEL
2014-15	81088	5719	13	6741
2015-16	110330	6424	16	7546
2016-17	98819	5143	18	6245
2017-18	127785	5989	20	8005
2018-19	149232	6122	23	8426

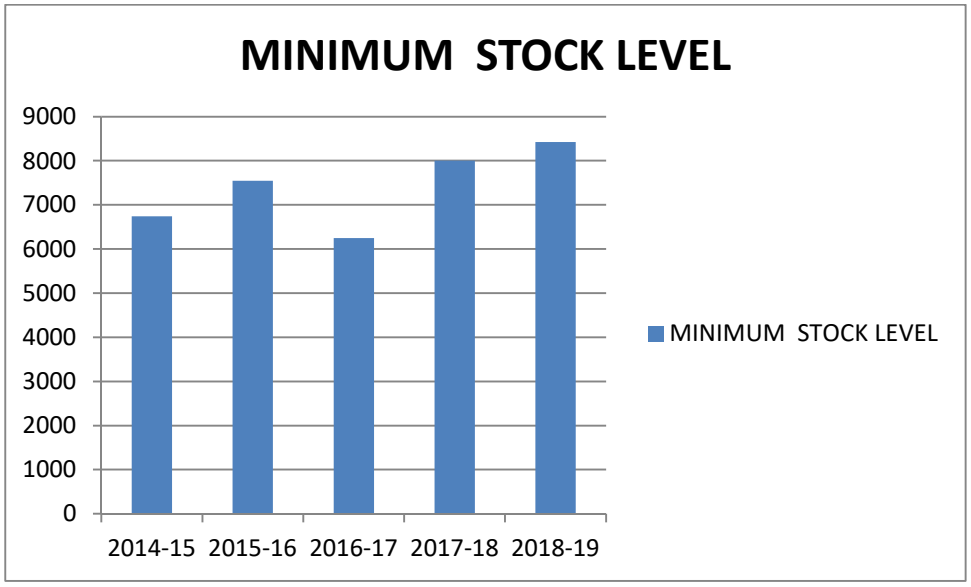

INTERPRETATION:

Minimum level of CLDPL during the period of 2015 - 16to 2014-15 in the year 2014-15 is 8426, This is Highest minimum Level .Lowest Minimum Level in the year 2016 - 17is 6245.

Maximum stock level:

Max stock level= min usage*min reorder period+re-order quantity

Statement showing the Maximum stock level of CLDPL during a period of five years from 2014 - 19 (In Rupees)

Year	Min usage	Reorder period	Order quantity	Max stock level
2014-15	5645	12	63220	130960
2015-16	6375	14	74190	163440
2016-17	5085	17	82180	168625
2017-18	5892	19	91090	203038
2018-19	6025	22	103240	235790

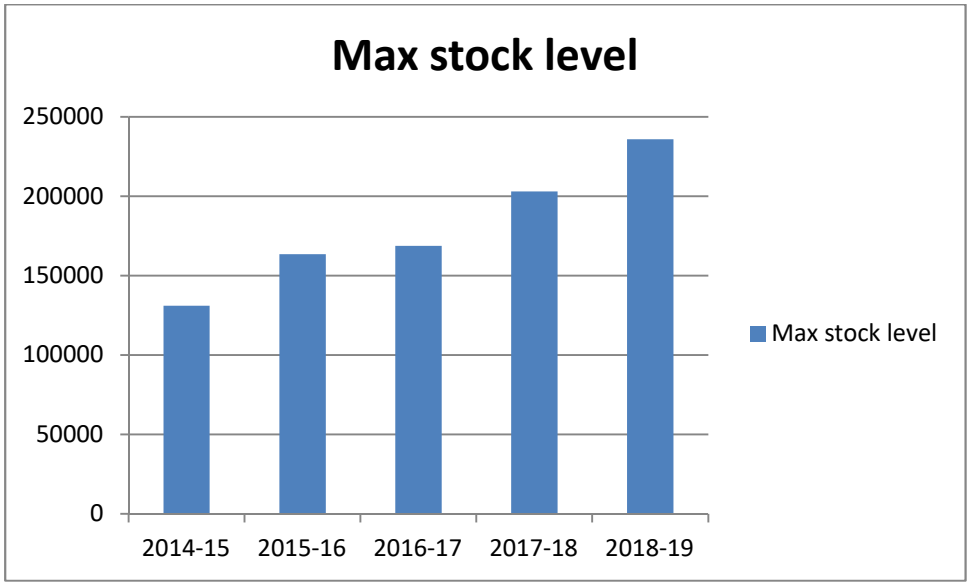

INTERPRETATION:

Max level of CLDPL the period of 2017 - 18to 2014-15 to the year 2014-15 is 235790 is highest max level value lowest max level value in the year 2015 - 16 is 130960

INVENTORY TURNOVER RATIO:

$$\text{Stock turnover ratio} = \frac{\text{Cost of goods sold}}{\text{Average inventory}}$$

Where,

Cost of goods sold = Opening stock + purchases +manufacturing expenses-closing stock

Average stock=opening stock + closing stock

Statement showing the Inventory Turnover ratio of CLDPL during a period of five years from 2014 - 19 (In Rupees)

Year	Cost of goods sold	Average inventory	Ratio
2014-15	620400585	3915608	158.44
2015-16	402809380	5340417	75.42
2016-17	375452783	5408699	69.41
2017-18	416479801	2311924	180.14
2018-19	415685890	4060680	102.36

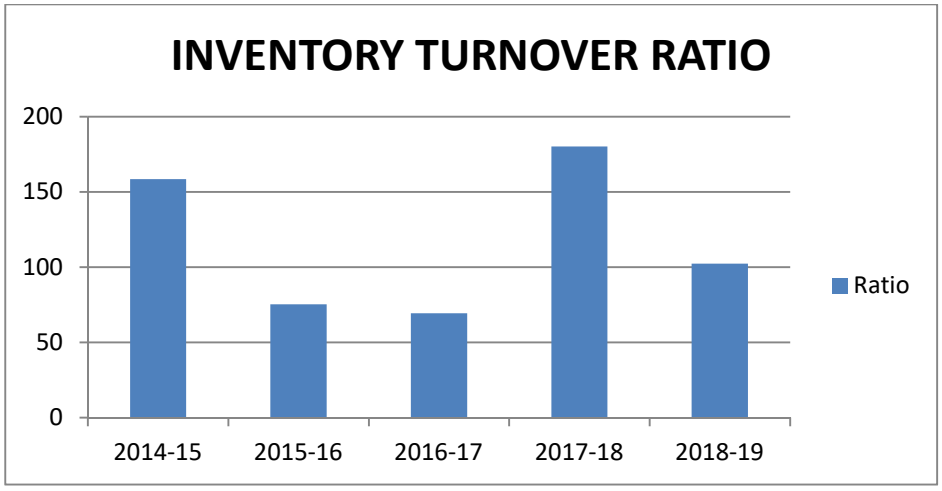

INTERPRETATION:

Period of 2015 - 16 to 2014-15 in the year 2018 - 19 is 180.14, this is the highest of goods sold and Average inventory of Cream line dairy products limited during the value. Lowest value in the year 2016 - 17is 69.41.Inventory turnover ratio discloses the information related to cost In the year 2015 - 16is 158.44,in the year 2015 - 16is 75.42, in the Year 2016 - 17is 69.41,in the year 2018 - 19 is 180.14 and in the year 2014-15 is 102.36 were recorded.

INVENTORY HOLDING PERIOD:

Inventory holding period = $\frac{360}{\text{Inventory turnover Ratio}}$

This ratio shows for how many days the inventory of the unit is being stored.

Statement showing the Inventory holding period of CLDPL during a period of five years from 2014 - 19 (In Rupees)

Year	Inventory turn over ratio	360days	Inventory holding period (In days)
2014-15	158.44	360	2.26
2015-16	75.42	360	4.74
2016-17	69.41	360	5.18
2017-18	180.14	360	1.99
2018-19	102.36	360	3.46

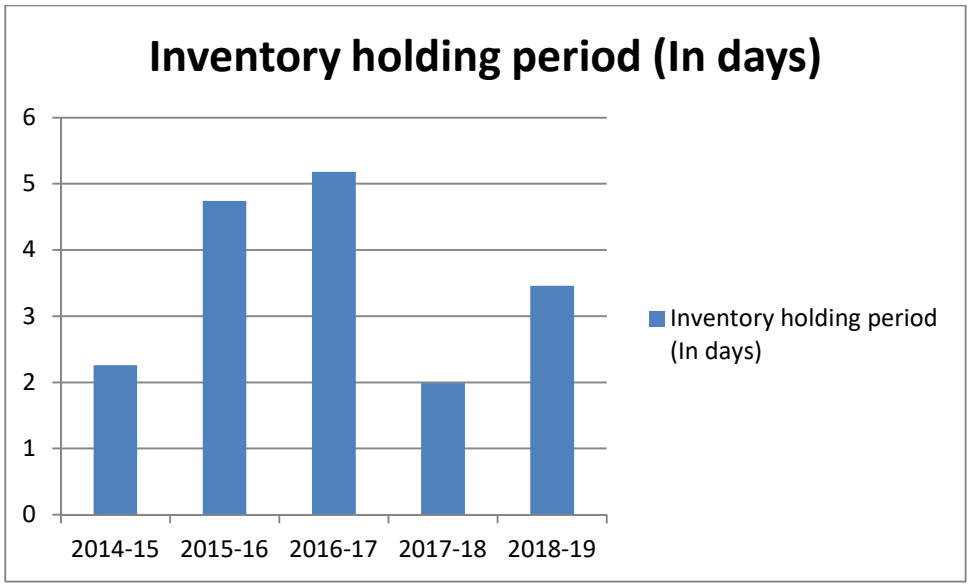

INTERPRETATION:

In general a higher holding period indicates favorable performance of the inventory holding period indicated an unfavorable performance of inventory holdings. So, lower holding period is preferable performance of inventory holdings. So, lower holding period is preferable in any company in order. To avail the benefit of adequate inventory holding and which in turn reflects the W.C performance of company.

Raw material turnover ratio:

$$\text{Raw Material Turnover} = \frac{\text{Material consumed}}{\text{Average raw material inventory}}$$

Statement showing the Inventory holding period of CLDPL during a period of five years from 2014 - 19

(In Rupees)

S.No.	Years	Material Consumed	Average raw material inventory	Raw material turnover
1	2014-15	406572422	577104128	0.7045
2	2015-16	381573354	358902228	1.0631
3	2016-17	314753053	337026434	0.9339
4	2017-18	346716322	378614149	0.9157
5	2018-19	418019205	384486293	1.0872

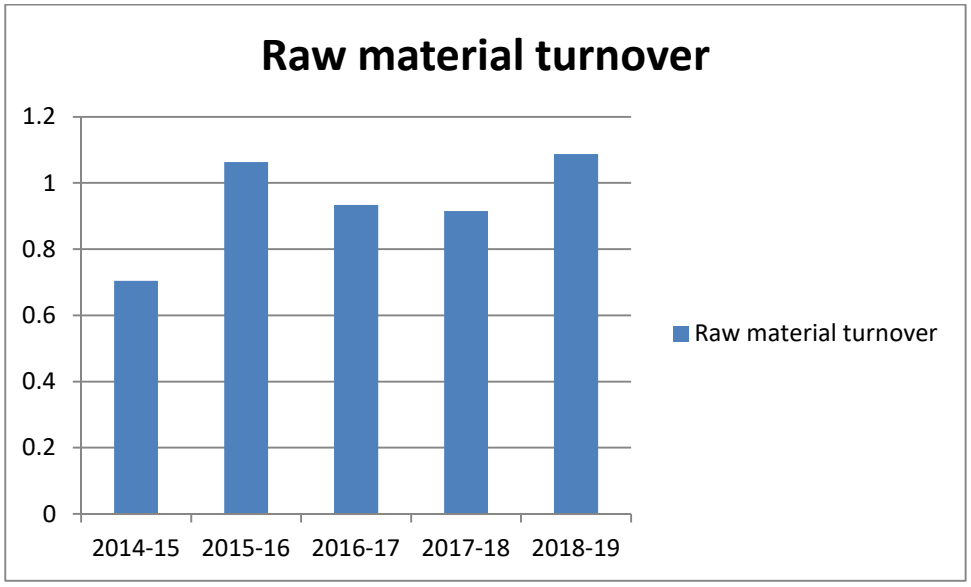

INTERPRETATION:

Raw material turnover ratio discloses the information related to annual consumption of raw material and average material of CLDPL during the period of 2015 - 16... The highest value in the year 2014-15 the ratio is1.0872.Raw material turnover ratio should be depend upon the environment conditions. Sometimes high and sometimes low in the raw material

Finished goods turnover ratio:

$$\text{Finished goods Turnover} = \frac{\text{Cost of goods sold}}{\text{Average finished goods}}$$

Statement showing the finished goods turnover ratio of CLDPL during a period of five years from 2014 - 19 **(In Rupees)**

Year	Cost of goods sold	Average finished goods	Finished goods ratio
2014-15	54.3889146	1957804	277.80
2015-16	49.5851256	26702085	18.56
2016-17	32.5414136	27043495	12.03
2017-18	56.9562633	3105962	19.17
2018-19	42.7431470	3186302	134.14

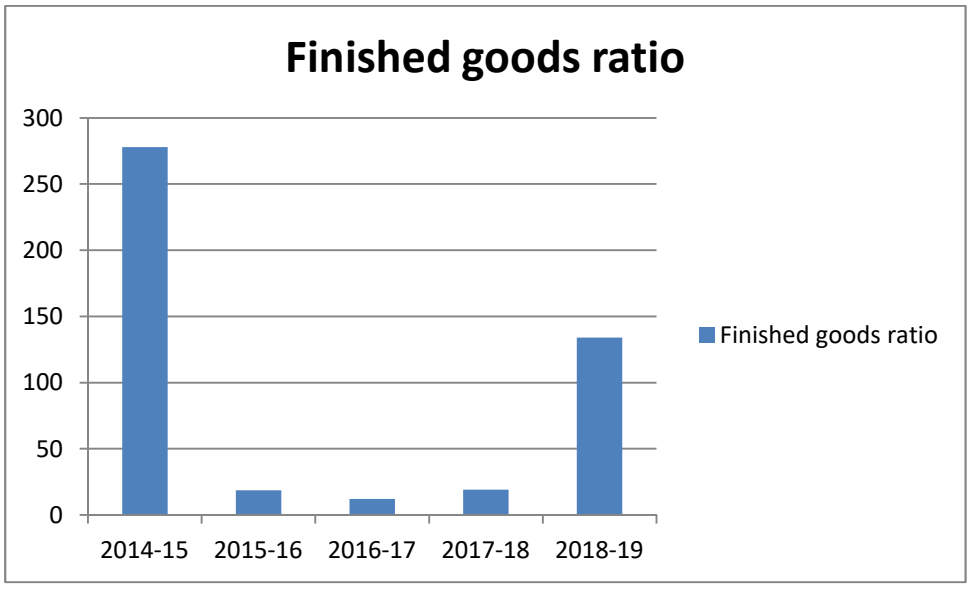

INTERPRETATION:

In the year 2015 - 16 was 277.80 and 2015 - 16was 18.56 and 2016 - 17was 12.03 and 2018 - 19 was 19.17 and 2014-15 was 134.14 ratios were recorded.

Working capital turnover ratio:

Working capital turnover ratio = Cost of Goods Sold/Average Net Working Capital

Statement showing the Working capital turnover ratio of CLDPL during a period of five years from 2014 - 19 **(In Rupees)**

Year	Cost of goods sold	Average net working Capital	Working capital Turnover ratio
2014-15	620400585	299346345	2.07
2015-16	402809380	904251715	0.45
2016-17	375452783	171867520	2.19
2017-18	416479801	109137279	3.82
2018-19	415685890	103794923	4.01

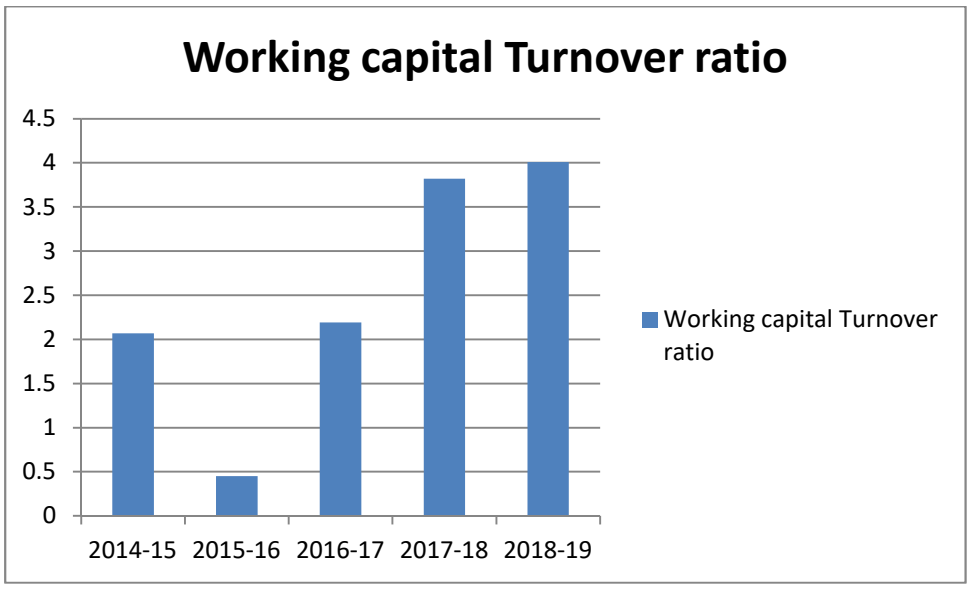

INTERPRETATION:

Working capital turnover ratio disclose information related to cost to cost to Goods and average Net working capital. In the year 2014-15 was 4.01 due to the highest cost of Goods sold and it was recorded lowest in the year 2015 - 16was 0.45 because lowest cost of goods Sold. In the year 2015 - 16was 0.45 in the year 2016 - 17was 2.19 in the year 2018 - 19 were 3.82 and in the year 2014-15 was 4.01were recorded.

CURRENT RATIO:

$$\text{CURRENT RATIO} = \frac{\text{Current assets}}{\text{Current liabilities}}$$

Statement showing the Current ratio of CLDPL during a period of five years from 2014 - 19 (In Rupees)

Year	Current assets	Current liabilities	CURRENT RATIO
2014-15	310546874	279166731	1.11
2015-16	311947258	162477058	1.91
2016-17	356077916	161813076	2.20
2017-18	420059145	179954528	2.33
2018-19	332300653	148720525	2.23

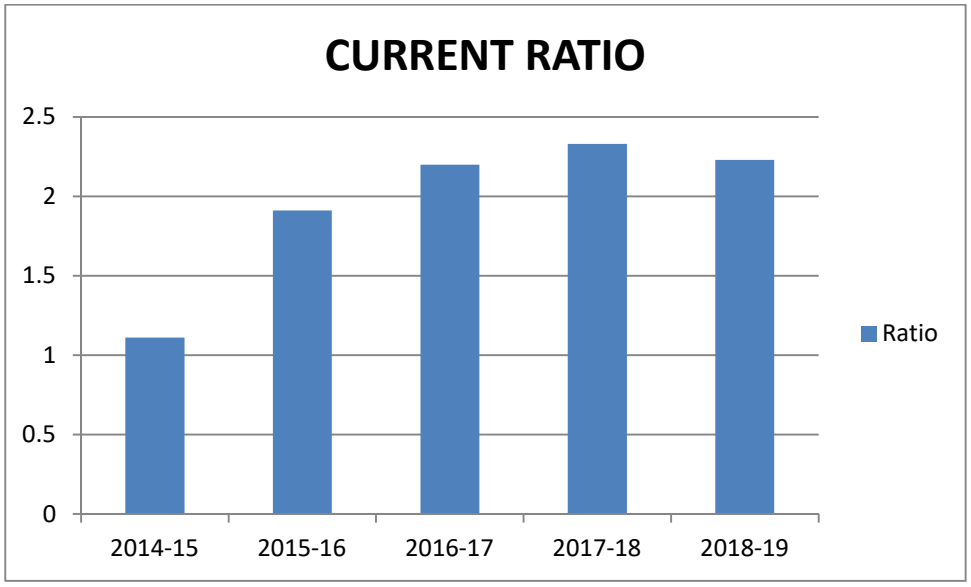

INTERPRETATION:

The current ratio discloses the information related to current assets and current liabilities of CLDPL during the period of 2015 - 16to 2014-15 the current ratio highest in the year 2017 - 18that is 2.33and the lowest current ratio in the year 2014-15thatIn the year 2015 - 16was 1.11and in the year 2015 - 16was 1.91and in the year 2016 - 17was 2.20and in the year 2018 - 19 was that is 2.33 and in the year 2014-15 that is 2.23 was recorded.

CHAPTER - VI

CONCLUSION

After completion of this study on **INVENTORY MANAGEMENT** at **THE JERSEY CREAMLINE DAIRY PRODUCTS LIMITED** can conclude that the overall performance of THE CLDPL is very good with respective inventory. It has been maintained inventories in a good manner by using efficient inventory techniques. Thus, finally it is concluded that the "INVENTORY MANAGEMENT" plays a very vital role for the success & smooth running of the Company without any interruption in the Company.

FINDINGS

- Company is maintaining good proportion of inventories in net working capital.
- Company maintains positive correlation between sales and inventory.
- It is found that the size of inventory shows an increasing trend. It provides the organization satisfy the maintenance of stock level in terms of inventory.
- Records maintenance system is clearly and separately in department wise
- It is found that, the current ratio is very high in the year of 2018 - 19 as well as the, inventory turnover ratio also.
- Some of inventories of ordered on the basis of minimum stock or reorder level.
- The company maintains balance position on raw material at cost.
- The inventory turnover ratio is increasing so that the firm is in good position.
- Inventory Turnover ratio is showing a increasing trend. It enables the organization is increasing sales in relation to production.
- Some of inventories of ordered on the basis of minimum stock or Reorder level.
- The percentage of Raw material in inventory also shows an increasing trend. It proves that the organization have adequate maintenance of stock level in terms of inventory.
- More damages are occurring in package section.

SUGGESTIONS

- Some of items are found to be slow and non-moving. The slow-moving items are spare and consumable goods hence the never necessity arises this items are being used. Non –moving items are also found in the inventory.
- The reasons for non-moving of inventory from stores are studied. Due to the MOQ (minimum order quantity) clause these items procured extra then the Requirement.
- During these year the cost of components are growing due to this reason gross profit of the organization was decreased .So the organization try to get more orders from its customers lead to increase sales.
- It is better to follow ABC analysis in their organisation. It helps to categorize the material according to their value and using according to maintain properly.
- Bin cards are maintained in Cream line dairy products to know the location of stocks, its current stock available, the issue of receipts of materials etc…
- If the inventory period holding period is increased it takes more number of days to convert finished goods. So the overall inventory holding period was decreases it is good for the organization.
- The company has to utilize the skilled and unskilled labour optimally.
- The company's utilization of inventory in generating sales is good. The yearly holding of all types of inventory is decreasing. This is positive trend.
- The company should introduce some of the major inventory classification methods used in modern industries for better control of inventories.

APPENDIX

BIBLIOGRAPHY

BOOK TITLE	AUTHOR	PUBLISHER
FINANCIAL MANAGEMENT	I.M. PANDEY	VIKAS PUBLISHING HOUSE Pvt Ltd., 1990 9th Edition
FINANCIAL MANAGEMENT	KHAN & JAIN	TATA MC GRAW 1998 Edition
FINANCIAL MANAGEMENT	R.P. RASTUGI	KITAB MAHAL 2000 Edition
FINANCIAL MANAGEMENT	PRASANNA CHANDRA	S.CHAND 2002 Edition
INVENTORY MANAGEMENT	B.S.GOEL	Kalyani Publishers 2002 Edition

Websites:

www.creamline .com

www.indian dairy.com

BALANCE SHHET AS ON 31S MARCH ,2015

Particulars	As at Rupees	As At Rupees
I. Sources of funds:		
1.shareholdres' funds		
a) share capital	91958110	
b) reserves and surplus	140594359	32552469
	---	
2. Loan funds		
a) secured loans	301349499	
b)unsecured loans	60094250	361443749

Deferred tax liability		35273178

TOTAL		--
		629269396
II. Application of funds:		---
1.**fixed assets**		**---**
a) gross block		
less: Depreciation		
c)Net block	535572701	
d)capital work in progress	1289210413	

	--	
	407362288	
2. Investments	2925860	410288148
3.Current assets, loans & Advances	---	
a)Inventories	--	2726500
b)Sundry debtors		
c)Cash and bank balances		
d)Loans and advances		
	194454601	
	12649833	
	56166700	

	64767903	
Less: Current liabilities &provision	----------	
	-	
Net Current assets	328039037	
	112153289	215885748

Miscellaneous expenditure	--	
Preliminary Expenses		
		369000
Total		

		629269396

BALANCE SHHET AS ON 31S MARCH ,2016

Particulars	**As at Rupees**	**As At Rupees**
I. Sources of funds:		
1.**shareholdres' funds**		
a) share capital	91958110	
b) reserves and surplus		
	161774032	
2**. Loan funds**	----------	253732142
a) secured loans		
b)unsecured loans	332890537	
	159375222	492265759
Deferred tax liability	----------	
TOTAL		53068029

II.Application of funds:		--
1.fixed assets		
a) Gross block		**799065930**
less: Depreciation		----------
c)Net block	592730953	---
d)Capital work in progress	168092267	

	--	
2. Investments	424638686	
3.Current assets, Loans& Advances	160611	
a)Inventories	----------	
b)Sundry debtors	--	
c)Cash and bank balances		424799297
d)Loans and advances		
		2726500

	328848877	
	24641390	
Less: Current liabilities &provision		
Net current assets	62055282	
	72541107	
Miscellaneous expenditure		
	----------	
preliminary expenses	-	
	488086656	
	116576522	371510134
Total	----------	

		3000
	3000	----------

		799065931

RAMACHANDRA
COLLEGE OF ENGINEERING
NH-5 Bypass Road, Vatluru (V), Eluru - 534007, W. G. Dist., A.P.

Approved by AICTE
Permanently Affilated to JNTUK
Recognized by UGC 2(f) & 12(B)
Accredited by NAAC B++
Accredited by NBA (ME, ECE, CSE)
ISO 9001 : 2015 Certified

2020-21

YEAR	PROGRAMME	NAME OF STUDENT
2020-21	Civil Engineering	ANUMAKONDA JAGADEESH SAI KUMAR
2020-21	Civil Engineering	BALUSU CHETHAN SAI
2020-21	Civil Engineering	BANDELA RAJESH
2020-21	Civil Engineering	BODDUPALLI DORA BABU
2020-21	Civil Engineering	BOSETTY YUGANDHAR
2020-21	Civil Engineering	BUDDALA TEJASWI
2020-21	Civil Engineering	CHAKKA DILEEP NAGA SAI SUMANTH
2020-21	Civil Engineering	DIRISIPAMU MANASWI
2020-21	Civil Engineering	CHALLAPALLI LAKSHMI NARAYANA
2020-21	Civil Engineering	CHIDHARABOINA DURGA SOWJANYA
2020-21	Civil Engineering	CHINTAPALLI JOSHI
2020-21	Civil Engineering	CHITTROJU CHAITANYA
2020-21	Civil Engineering	DAVULURI SAI DEEPTHI
2020-21	Civil Engineering	GOTIKALA DHANA CHANDRA VIJAYA
2020-21	Civil Engineering	GAJJARAPU NAGA NAVYA
2020-21	Civil Engineering	GANNAMANENI LAVANYA
2020-21	Civil Engineering	VINNAKOTA B V PHANI MARUTHI SU
2020-21	Civil Engineering	GAZREEN SADAF
2020-21	Civil Engineering	GUNTUPALLI KUMAR SAI
2020-21	Civil Engineering	GUTTULA POOJITHA
2020-21	Civil Engineering	INDANA DHANA SEKHAR
2020-21	Civil Engineering	JAMPINA BALA NARESH
2020-21	Civil Engineering	KADALI ALEKHYA
2020-21	Civil Engineering	KANAKAM LOKESHWAR
2020-21	Civil Engineering	KOPPULA HANOK
2020-21	Civil Engineering	KORAGANGI KRISHNA SASHANK
2020-21	Civil Engineering	KOYYALAMUDI JYOTSHNA PRIYA
2020-21	Civil Engineering	KOYYE SUJITH
2020-21	Civil Engineering	MALLAMPALLI HEMANTH KUMAR
2020-21	Civil Engineering	KUNISETTI Y L PRAVALLIKA
2020-21	Civil Engineering	MANYAM SRILAKSHMI PRASANNA ANI
2020-21	Civil Engineering	MARADANI GANESH
2020-21	Civil Engineering	MUDEDLA TEJA
2020-21	Civil Engineering	NAINAR MOUNICA
2020-21	Civil Engineering	NARA BALAJI
2020-21	Civil Engineering	NIMMADALA SAI KUMAR
2020-21	Civil Engineering	PALAPARTHI JAGADEESH

2020-21	Civil Engineering	PALLISETTI SAI KRISHNA KANTH
2020-21	Civil Engineering	PORIPIREDDY SAI VENKATA ANUDEE
2020-21	Civil Engineering	POTHURAJU PRAVEEN KUMAR
2020-21	Civil Engineering	SAI CHAITANYA KONDETI
2020-21	Civil Engineering	SHAIK MANISHA
2020-21	Civil Engineering	SYED KAMRAN ASHRAF
2020-21	Civil Engineering	SOMISETTI SAI SURYA TEJA
2020-21	Civil Engineering	THOTA SANTOSH KUMAR
2020-21	Civil Engineering	THOTAKURA ANKITH
2020-21	Civil Engineering	UNDRU RAJASHEKAR
2020-21	Civil Engineering	UPPE PREM KUMAR
2020-21	Civil Engineering	VADLAPUDI SHANMUKH SAI
2020-21	Civil Engineering	VANGA TEJASWINI
2020-21	Civil Engineering	AKKINENI MOHITH CHOWDARY
2020-21	Civil Engineering	BATCHU VINEETHA
2020-21	Civil Engineering	DUBA SAI KUMAR
2020-21	Civil Engineering	KAVULURU MOHAN SAI
2020-21	Civil Engineering	KOLUSU SAI KRISHNA
2020-21	Civil Engineering	PAMIDIMUKKALA NARASIMHA BHUPAT
2020-21	Civil Engineering	RUNKANI HEMANAGADEVISRAVANTHI
2020-21	Civil Engineering	SHAIK HEENA KOUSAR
2020-21	Electrical and Electronics Enineering	ATTANKI SWATHI
2020-21	Electrical and Electronics Enineering	CHALLA PURNA CHAND
2020-21	Electrical and Electronics Enineering	NELLI MOHAN MANIKANTA
2020-21	Electrical and Electronics Enineering	RAVIKOTI KARTHIK
2020-21	Electrical and Electronics Enineering	CHALLARI GNANA SUNDARI
2020-21	Electrical and Electronics Enineering	GOLLAPALLI ARJUN SAVITRA
2020-21	Electrical and Electronics Enineering	BADITA SAINADH
2020-21	Electrical and Electronics Enineering	MOHAMMAD ROSHAN
2020-21	Electrical and Electronics Enineering	CHINTHA SEETHARAMULU
2020-21	Electrical and Electronics Enineering	GAMPALA SURESH
2020-21	Electrical and Electronics Enineering	THOTA DEVI PAVAN SRINIVAS

2020-21	Electrical and Electronics Enineering	CHIGURUPATI DEEPU
2020-21	Electrical and Electronics Enineering	GOPALA VARALAKSHMI
2020-21	Electrical and Electronics Enineering	BALINA SURENDRA GOWD
2020-21	Electrical and Electronics Enineering	KONDETI MANOJ KUMAR
2020-21	Electrical and Electronics Enineering	DARAM RAHUL ROY
2020-21	Electrical and Electronics Enineering	DABBUKOTTUMAHESH
2020-21	Electrical and Electronics Enineering	ONUMU JANAKI MANIKANTA
2020-21	Electrical and Electronics Enineering	S TEJ MANI PAVAN
2020-21	Electrical and Electronics Enineering	KOTTE RAJESH
2020-21	Electrical and Electronics Enineering	ISUKAPALLI NAGASUNEETHA
2020-21	Electrical and Electronics Enineering	PAMARTHI PRAVALLIKA
2020-21	Electrical and Electronics Enineering	BURADA JAGADEESH
2020-21	Electrical and Electronics Enineering	KARAM ANIL KUMAR
2020-21	Electrical and Electronics Enineering	KODI GUNA SEKHAR
2020-21	Electrical and Electronics Enineering	MATHI JAHNAVI
2020-21	Electrical and Electronics Enineering	N LAKSHMI PRAVEENA
2020-21	Electrical and Electronics Enineering	KOTARI JYOSNA
2020-21	Electrical and Electronics Enineering	NERUSU RAVALI
2020-21	Electrical and Electronics Enineering	P SURYANARAYANA
2020-21	Electrical and Electronics Enineering	MD ROSHAN JAMEER
2020-21	Electrical and Electronics Enineering	MUPPANA SAI JAHNAVI
2020-21	Electrical and Electronics Enineering	SHAIK AZIZ

2020-21	Electrical and Electronics Enineering	K MIDUN CHAKRAVARTHI
2020-21	Electrical and Electronics Enineering	R V SIVA NAGA SAI MAHESH
2020-21	Electrical and Electronics Enineering	P LAKSHMI SIREESHA
2020-21	Electrical and Electronics Enineering	SONGA SRINIVASA RAO
2020-21	Electrical and Electronics Enineering	SEELA KARTHIK
2020-21	Electrical and Electronics Enineering	SHAIK SHAHESTA MUBHASHIR
2020-21	Electrical and Electronics Enineering	PENUBOYINA SUPRIYA
2020-21	Electrical and Electronics Enineering	VADLAMUDI CHANDU
2020-21	Electrical and Electronics Enineering	KEELU SAHITYA
2020-21	Electrical and Electronics Enineering	BODDAPATI ANUPAM KUMAR
2020-21	Electrical and Electronics Enineering	PULLAGORLA BALA ARCHANA
2020-21	Electrical and Electronics Enineering	REVALLA SREENU
2020-21	Electrical and Electronics Enineering	M SIVA RAMA KRISHNA
2020-21	Electrical and Electronics Enineering	KASANI SIVANNARAYANA
2020-21	Electrical and Electronics Enineering	Y LOHINI NAGA DURGA
2020-21	Electrical and Electronics Enineering	KOMMA SIRISHA
2020-21	Electrical and Electronics Enineering	PAMARTHI RAVI
2020-21	Electrical and Electronics Enineering	INIKOTI DURGA PRASAD
2020-21	Electrical and Electronics Enineering	KASIREDDY PAVAN
2020-21	Electrical and Electronics Enineering	RAJANA CHANDRA TEJA
2020-21	Electrical and Electronics Enineering	SALI HARSHITHA
2020-21	Electrical and Electronics Enineering	SHAIK NAZEER BABU

2020-21	Electrical and Electronics Enineering	KATARI CHAITANYA VARMA
2020-21	Electrical and Electronics Enineering	NIDUMOLU DEVI
2020-21	Electrical and Electronics Enineering	BUNGA SUNIL KUMAR
2020-21	Electrical and Electronics Enineering	ADARI PURNA SIVA
2020-21	Electrical and Electronics Enineering	GARIGIPATI SRIVALLI DEVI
2020-21	Electrical and Electronics Enineering	UPPU CHANDU
2020-21	Electrical and Electronics Enineering	LOLUGU ANJALI
2020-21	Electrical and Electronics Enineering	ALLAMSETTI DILEEP KUMAR
2020-21	Electrical and Electronics Enineering	CH BHARGAVACHARI
2020-21	Electrical and Electronics Enineering	GANJI NAGA MALLESWARI
2020-21	Electrical and Electronics Enineering	CHINNAM PRAVEEN
2020-21	Electrical and Electronics Enineering	A V N L S S D S DHANALAKSHMI
2020-21	Electrical and Electronics Enineering	JAVVADI RAJESH
2020-21	Electrical and Electronics Enineering	KOTTU NAVYA
2020-21	Electrical and Electronics Enineering	KOTHAKOTA JYOTSNA PRIYA
2020-21	Electrical and Electronics Enineering	BONDA NANAJI
2020-21	Electrical and Electronics Enineering	CHITTI JAHNAVI
2020-21	Electrical and Electronics Enineering	K D VENKATA KISHORE
2020-21	Electrical and Electronics Enineering	PINNIBOYINA VEERA RAJU
2020-21	Electrical and Electronics Enineering	BONIGI SYAMKUMAR
2020-21	Electrical and Electronics Enineering	MADAKA MOHAN
2020-21	Electrical and Electronics Enineering	REDDY SRIDEVI PRIYA

2020-21	Electrical and Electronics Enineering	BALLA LEELA MANIKANTA
2020-21	Electrical and Electronics Enineering	CHEBOYINA NAGA SIRISHA
2020-21	Electrical and Electronics Enineering	VELAGAPALLI YOBU
2020-21	Electrical and Electronics Enineering	RANGISETTI NAGA SAI MEGHALA
2020-21	Electrical and Electronics Enineering	POKURI RATNA KUMAR
2020-21	Electrical and Electronics Enineering	CHINTHA NAGARAJU
2020-21	Electrical and Electronics Enineering	GHANTA SRITEJA
2020-21	Electrical and Electronics Enineering	VANUKURI RAMYA SRI
2020-21	Electrical and Electronics Enineering	GURRAM SANDHYA SURYAKALA
2020-21	Electrical and Electronics Enineering	DOKKU DIVYA
2020-21	Electrical and Electronics Enineering	KANCHARLA SUMANTH KUMAR
2020-21	Electrical and Electronics Enineering	NALLURI DHANURUSH
2020-21	Electrical and Electronics Enineering	KONDETI VARUN RAJ
2020-21	Electrical and Electronics Enineering	GURRAM PAVANI
2020-21	Electrical and Electronics Enineering	NADIPOORI SANKARAO
2020-21	Electrical and Electronics Enineering	SANKU VAMSI KRISHNA
2020-21	Electrical and Electronics Enineering	PENTA RAVI NAGASAI
2020-21	Electrical and Electronics Enineering	KARANAM BABY SARANYA
2020-21	Electrical and Electronics Enineering	BOKKA TEJA BHARGAVA
2020-21	Electrical and Electronics Enineering	VANGAPANDU JAGADEESH
2020-21	Electrical and Electronics Enineering	DHANUKONDA DURGA PRASAD
2020-21	Electrical and Electronics Enineering	KOLUSU SWETHA

2020-21	Electrical and Electronics Enineering	SYED ABDUL MUKHEEM
2020-21	Electrical and Electronics Enineering	P VENKATESWARA RAO
2020-21	Electrical and Electronics Enineering	MAMIDISETTI SIVAPRASAD
2020-21	Electrical and Electronics Enineering	NIMMAGADDA AKHILA
2020-21	Electrical and Electronics Enineering	SAVALAM ANURADHA
2020-21	Electrical and Electronics Enineering	PAVAN KUMAR
2020-21	Electrical and Electronics Enineering	MIRIYALA THANUJA
2020-21	Electrical and Electronics Enineering	PILLAGOLLA VENKATESH
2020-21	Electrical and Electronics Enineering	ETAKOTA SRINIVAS
2020-21	Electrical and Electronics Enineering	YASWANTH VEMULAPALLI
2020-21	Electrical and Electronics Enineering	PALNATI SRI RAMYA
2020-21	Electrical and Electronics Enineering	TERA NANI BABU
2020-21	Electrical and Electronics Enineering	MOHAMMAD KHADARUNNISA
2020-21	Electrical and Electronics Enineering	KATIKALA ABHILASH
2020-21	Electrical and Electronics Enineering	P PURNA LAKSHMI PRASANNA
2020-21	Electrical and Electronics Enineering	POOTHI PALLAVI
2020-21	Electrical and Electronics Enineering	BOSETTI SRIRAM
2020-21	Electrical and Electronics Enineering	V DWARAKANADH NIKHIL
2020-21	Electrical and Electronics Enineering	PIDUGU GAYATHRI
2020-21	Electrical and Electronics Enineering	PINJARI SAEERABEE
2020-21	Electrical and Electronics Enineering	KAKI NIKHIL SAI
2020-21	Electrical and Electronics Enineering	PALNATI ACHYUTH KUMAR

2020-21	Electrical and Electronics Enineering	VANUKURU DIVYASRI
2020-21	Electrical and Electronics Enineering	KALLURI JAYA NAGENDRA
2020-21	Electrical and Electronics Enineering	DASARI KAMALESHITHA
2020-21	Electrical and Electronics Enineering	P N V LAKSHMI DINESHKUMAR
2020-21	Mechanical Engineering	KONCHADA UDAY KIRAN
2020-21	Mechanical Engineering	BOGARAM NARENDRA
2020-21	Mechanical Engineering	DIMMETA KRUPA SEKHAR
2020-21	Mechanical Engineering	G V VENKATA SAI VARA PRASAD
2020-21	Mechanical Engineering	B SRI BHANU NAGA VENKA
2020-21	Mechanical Engineering	BHIMASINGH SAI GANESH
2020-21	Mechanical Engineering	BHUPATHIRAJU RATNALA RAJU
2020-21	Mechanical Engineering	BODA SASI KUMAR
2020-21	Mechanical Engineering	BOMMANA LOKENDRA KUMAR
2020-21	Mechanical Engineering	BUDDHE CHAHAN BADHRINADH
2020-21	Mechanical Engineering	BUSANABOYINA MAHESH BABU
2020-21	Mechanical Engineering	CHALAMALA SURESH KUMAR
2020-21	Mechanical Engineering	CHANDU VINAY KUMAR
2020-21	Mechanical Engineering	DALIPARTHI NAGA VENKATA SANTHO
2020-21	Mechanical Engineering	DASE VISHAL SAMRAT
2020-21	Mechanical Engineering	DEVARAPALLI PRAVEEN
2020-21	Mechanical Engineering	DEVARAPALLI RAMESH
2020-21	Mechanical Engineering	JAMI MOHAN SATYA KALYANRAM
2020-21	Mechanical Engineering	GANDIKOTA SYAM SUNDAR
2020-21	Mechanical Engineering	GANDIKOTA YESANNA
2020-21	Mechanical Engineering	GANTEDA SANTHOSH KUMAR
2020-21	Mechanical Engineering	KOMMA SANDEEP TEJA
2020-21	Mechanical Engineering	INDUKURI PAVAN KUMAR VARMA
2020-21	Mechanical Engineering	JALLURI SANDEEP
2020-21	Mechanical Engineering	KANDIKATTU SAI RAGHU CHANDRA
2020-21	Mechanical Engineering	KATRU SIVA NAGA BABU
2020-21	Mechanical Engineering	LANKA SATISH KUMAR
2020-21	Mechanical Engineering	LAVETI DURGAPRASAD
2020-21	Mechanical Engineering	AINALA SUBRAHMANYAM
2020-21	Mechanical Engineering	AMBATI PADDA REDDY
2020-21	Mechanical Engineering	BODA UDAY KIRAN
2020-21	Mechanical Engineering	BUDAMPARTHI LEELA KUMAR
2020-21	Mechanical Engineering	BYRIPINDI DURGA PRASAD
2020-21	Mechanical Engineering	CHOKAPU SRIHARI
2020-21	Mechanical Engineering	DANDURI LEELA SAI KIRAN
2020-21	Mechanical Engineering	DEVARAPALLI SREEKANTH

2020-21	Mechanical Engineering	DUDI RAVI SAI
2020-21	Mechanical Engineering	ELIKE NOVAH
2020-21	Mechanical Engineering	GALI UMA NAVEEN KUMAR
2020-21	Mechanical Engineering	GOLLAPALLI SUMANTH
2020-21	Mechanical Engineering	GORALA KALYAN
2020-21	Mechanical Engineering	INJAMALA ARUN RAJU
2020-21	Mechanical Engineering	EDE SAI TEJA
2020-21	Mechanical Engineering	KALIDASU MANIKANTASWAMY
2020-21	Mechanical Engineering	KAMBAMMETTU ANISH KUMAR
2020-21	Mechanical Engineering	KANTU DURGA PRASAD
2020-21	Mechanical Engineering	GORRELA ARAVIND
2020-21	Mechanical Engineering	KOMMANA AVINASH
2020-21	Mechanical Engineering	M.DEEPAK
2020-21	Mechanical Engineering	ALAPATI AKHILA
2020-21	Mechanical Engineering	MAPARTHI VAMSI KUMAR
2020-21	Mechanical Engineering	MATTA NAVEEN
2020-21	Mechanical Engineering	MATTA SRI KANTH
2020-21	Mechanical Engineering	MEESALA RAKESH
2020-21	Mechanical Engineering	MORLA VEERA VENKATA SATYANARAY
2020-21	Mechanical Engineering	KOTHURI AVINASH
2020-21	Mechanical Engineering	NELLI SAI
2020-21	Mechanical Engineering	NERUSU PRUDHVI RAJ
2020-21	Mechanical Engineering	NITTA VAMSI
2020-21	Mechanical Engineering	PAMARTHI GOPIKRISHNA
2020-21	Mechanical Engineering	PENKE APPALA RAJU
2020-21	Mechanical Engineering	PERURI SARATH PAVAN
2020-21	Mechanical Engineering	POTHURI NIKHILESWARA SAI GANES
2020-21	Mechanical Engineering	PUSHADAPU VENKATA KALYAN
2020-21	Mechanical Engineering	PUSULURU JAYA RAM
2020-21	Mechanical Engineering	REDDI BHAVANI
2020-21	Mechanical Engineering	SAMBANGI SAI PAVAN
2020-21	Mechanical Engineering	SAVIRIGANI BALA SAI SATYA KRIS
2020-21	Mechanical Engineering	SONTI ANUSHA
2020-21	Mechanical Engineering	TADADA VAMSI
2020-21	Mechanical Engineering	TALARI RAKESH
2020-21	Mechanical Engineering	THAMATAPU JYOTHI VENKATA SHANK
2020-21	Mechanical Engineering	THOMMANDRU YUVARAJ
2020-21	Mechanical Engineering	UYYURI RAMA TULASI RAO
2020-21	Mechanical Engineering	VALAMULA RAVI KIRAN
2020-21	Mechanical Engineering	VASANA SESHAVENKATASAI
2020-21	Mechanical Engineering	VASANTHAVADA NAGAKOTESWARARAO
2020-21	Mechanical Engineering	YAMANDRA RAJ KUMAR
2020-21	Mechanical Engineering	KONDAPAVULURI RAKESH
2020-21	Mechanical Engineering	MAGANTI GOPI KRISHNA

2020-21	Mechanical Engineering	MARRIVADA SNEHA
2020-21	Mechanical Engineering	MATHI GEETHA KRISHNA
2020-21	Mechanical Engineering	NALLA DURGA SAI DINESH
2020-21	Mechanical Engineering	NARNI MANI MOHAN SAI
2020-21	Mechanical Engineering	PEDAPATI PAVAN KUMAR
2020-21	Mechanical Engineering	SHAIK BASHIRUDDIN
2020-21	Mechanical Engineering	SUDDAPALLI PHANI KUMAR
2020-21	Mechanical Engineering	TEKKALA NAVEEN KUMAR
2020-21	Mechanical Engineering	VEMULA JAGADEESH BABU
2020-21	Mechanical Engineering	YEGIREDDI SOMESHU RAVIKIRAN
2020-21	Mechanical Engineering	PENUMUDI R N SAI GUPTA
2020-21	Mechanical Engineering	BANDI BHUSHANAM
2020-21	Mechanical Engineering	BHEEMSETTI REVANTH
2020-21	Mechanical Engineering	NALLERU VENU GOPAL
2020-21	Mechanical Engineering	LANJALA RAM BABU
2020-21	Mechanical Engineering	PAVULURI RAKESH KUMAR
2020-21	Mechanical Engineering	YADAVALLI VENKATESWARLU
2020-21	Electronics and Communication Engineering	BEZAWADA NAGA MALLESWARI
2020-21	Electronics and Communication Engineering	ADARI TEJA PRATAP
2020-21	Electronics and Communication Engineering	MUTINENI RUPASRI
2020-21	Electronics and Communication Engineering	GUNDUBOINA TULASI RAM
2020-21	Electronics and Communication Engineering	KARE JOSHUA DANIEL
2020-21	Electronics and Communication Engineering	CHINTALA SRAVANI
2020-21	Electronics and Communication Engineering	PARIMI INDHU
2020-21	Electronics and Communication Engineering	BEERAM SAI HARSHA
2020-21	Electronics and Communication Engineering	VANDRANKI SRI LAKSHMI PRASAD
2020-21	Electronics and Communication Engineering	KALIDASU LAKSHMI SAI KUMAR
2020-21	Electronics and Communication Engineering	CHALAMALA BALA KANYA RAJESWARI
2020-21	Electronics and Communication Engineering	GANDAM MALLIKA
2020-21	Electronics and Communication Engineering	LANKAPALLI USHA

2020-21	Electronics and Communication Engineering	GANGUMOLU RAKESH
2020-21	Electronics and Communication Engineering	VEMPATI ANUSHA REDDY
2020-21	Electronics and Communication Engineering	GOLLA MANASA
2020-21	Electronics and Communication Engineering	BHUKYA DEEPIKA
2020-21	Electronics and Communication Engineering	MENDI JAYANTH
2020-21	Electronics and Communication Engineering	ANNAM PRIYANKA
2020-21	Electronics and Communication Engineering	KUNISETTI Y R PRATHYUSHA
2020-21	Electronics and Communication Engineering	BADISA SURESH
2020-21	Electronics and Communication Engineering	VEERLA NAGENDRA BABU
2020-21	Electronics and Communication Engineering	UPPALAPATI RUCHITHA CHOWDARY
2020-21	Electronics and Communication Engineering	MAJJI PURNA PRADEEP
2020-21	Electronics and Communication Engineering	DONKADA MOUNIKESWARI
2020-21	Electronics and Communication Engineering	NIMMAGADDA DHARUN SAI
2020-21	Electronics and Communication Engineering	BEERAM SAVERI
2020-21	Electronics and Communication Engineering	PUTTI NAGA SIREESHA
2020-21	Electronics and Communication Engineering	KURAMSETTI ALEKHYA
2020-21	Electronics and Communication Engineering	MUTHABATHULA VASANTHBABU
2020-21	Electronics and Communication Engineering	BONDA BHANU SIRISHA
2020-21	Electronics and Communication Engineering	KALIDASU SWAPNA
2020-21	Electronics and Communication Engineering	BEJJA VANAJA
2020-21	Electronics and Communication Engineering	GUDIMETLA SATYA SAI SRIHARSHA
2020-21	Electronics and Communication Engineering	MUSUNURI RUPA LATHA

2020-21	Electronics and Communication Engineering	ARLI SRUJANA
2020-21	Electronics and Communication Engineering	KANDIKUPPA SRIDEVI
2020-21	Electronics and Communication Engineering	BHASURU SAI SRAVAN
2020-21	Electronics and Communication Engineering	DARAPUREDDY RAMYA HARSHITHA
2020-21	Electronics and Communication Engineering	DARAPUREDDY NAGASAI VENKATESH
2020-21	Electronics and Communication Engineering	DAKARAPU SRI ANJALI
2020-21	Electronics and Communication Engineering	MADASU SOMA SEKHAR SAI KRISHNA
2020-21	Electronics and Communication Engineering	KUNDERU L N S LALITHA HARSHITHA
2020-21	Electronics and Communication Engineering	BUSI BHANU
2020-21	Electronics and Communication Engineering	AKKABATHULA VIJAYKUMAR
2020-21	Electronics and Communication Engineering	TAMARAPALLI RUPA DURGA
2020-21	Electronics and Communication Engineering	DHARANALAKOTA MANIKANTESH
2020-21	Electronics and Communication Engineering	VALLABHANENI ALEKHYA
2020-21	Electronics and Communication Engineering	KALAM MAHESH
2020-21	Electronics and Communication Engineering	BOORLA SHARMILA
2020-21	Electronics and Communication Engineering	MULLAPUDI RAMYA SRI
2020-21	Electronics and Communication Engineering	UPPALAPATI MANASA
2020-21	Electronics and Communication Engineering	KAGITALA SWARUPA
2020-21	Electronics and Communication Engineering	CHALLAGOLLA SAI VARUN
2020-21	Electronics and Communication Engineering	KASI TEJA SREE
2020-21	Electronics and Communication Engineering	YANDRA SAI SMYLIKA
2020-21	Electronics and Communication Engineering	KASULA UMESHCHANDRA

2020-21	Electronics and Communication Engineering	SUREDDY VENKATA SAI TEJA
2020-21	Electronics and Communication Engineering	PALLELA VANDANA
2020-21	Electronics and Communication Engineering	KUNAPAREDDY PHANI RANI
2020-21	Electronics and Communication Engineering	KAKOLLU DEDISHYA
2020-21	Electronics and Communication Engineering	AKULA SRILAKSHMI
2020-21	Electronics and Communication Engineering	NAGALAKSHMI YANAMANDALA
2020-21	Electronics and Communication Engineering	YELLE SRAVANI
2020-21	Electronics and Communication Engineering	DOKKU HEMAPHANEESWAR
2020-21	Electronics and Communication Engineering	BONAM VIJAY DURGABABU
2020-21	Electronics and Communication Engineering	BETHALA PREM KUMAR
2020-21	Electronics and Communication Engineering	PUTTI TULASI
2020-21	Electronics and Communication Engineering	MENDI PAVAN KUMAR
2020-21	Electronics and Communication Engineering	PARASA ROOPA
2020-21	Electronics and Communication Engineering	NANDIGAM PRASANTH
2020-21	Electronics and Communication Engineering	MARADANI BHUVAN KISHORE
2020-21	Electronics and Communication Engineering	GORRIPUTTI HIMABINDU
2020-21	Electronics and Communication Engineering	LANJALA SUNEETHA
2020-21	Electronics and Communication Engineering	KOSHANAM HEMA SREE
2020-21	Electronics and Communication Engineering	DHARMAVARAPU SAITEJA
2020-21	Electronics and Communication Engineering	MALLA DEEPTHI
2020-21	Electronics and Communication Engineering	GAJARAO GREESHMA SRINITHA
2020-21	Electronics and Communication Engineering	BANKAPALLI LAKSHMI CHAITANYA

2020-21	Electronics and Communication Engineering	KONDAPAVULURI BHANU PRAKASH
2020-21	Electronics and Communication Engineering	URNANI LAHARI
2020-21	Electronics and Communication Engineering	KALAKOTI VAMSI
2020-21	Electronics and Communication Engineering	EDA RIYA
2020-21	Electronics and Communication Engineering	SIRIGINEEDI JNANA KRISHNA MANIDEEP
2020-21	Electronics and Communication Engineering	UPPLAPATI SATYA LAVANYA
2020-21	Electronics and Communication Engineering	ADINA KALYAN VENKATESH
2020-21	Electronics and Communication Engineering	VANJARAPU PRASANNALAKSHMI
2020-21	Electronics and Communication Engineering	SHAIK KALISHA
2020-21	Electronics and Communication Engineering	CHAVALACHERI KARUNA
2020-21	Electronics and Communication Engineering	NAKKINA NAVYASREE
2020-21	Electronics and Communication Engineering	BATHINA RANGAMMA
2020-21	Electronics and Communication Engineering	MAGANTI VENKATA SATYANARAYANA
2020-21	Electronics and Communication Engineering	MIDITHIPATI PRAVALLIKA
2020-21	Electronics and Communication Engineering	YERUBOINA NAVEEN KUMAR
2020-21	Electronics and Communication Engineering	GANTASALA PAVAN KUMAR
2020-21	Electronics and Communication Engineering	PARSA SAI KUMAR
2020-21	Electronics and Communication Engineering	MEKALA ANNAPURNADEVI
2020-21	Electronics and Communication Engineering	GADDAM ISWARYA
2020-21	Electronics and Communication Engineering	GUTTA NITEESHA SAI
2020-21	Electronics and Communication Engineering	KOLLI SAI CHAITANYA
2020-21	Electronics and Communication Engineering	NITTA DEVI PRIYANKA

2020-21	Electronics and Communication Engineering	DURGASI APARANJI
2020-21	Electronics and Communication Engineering	KHAN DILSHA
2020-21	Electronics and Communication Engineering	NAGUBANDI SAI
2020-21	Electronics and Communication Engineering	CHILAKANTI RAMYA
2020-21	Electronics and Communication Engineering	DAMPANABOINA PAVANI
2020-21	Electronics and Communication Engineering	NAGIRIPU PRASANTH KUMAR
2020-21	Electronics and Communication Engineering	PARUCHURI SAI MANIDEEPAK
2020-21	Electronics and Communication Engineering	NALABOLU VAMSI KRISHNA
2020-21	Electronics and Communication Engineering	TUMULURI LALITHA
2020-21	Electronics and Communication Engineering	DONGA JYOTHI
2020-21	Electronics and Communication Engineering	TAMMISETTI YUVA KAVYA
2020-21	Electronics and Communication Engineering	GOLLAPUDI GAYATHRI SOWMYA
2020-21	Electronics and Communication Engineering	PAPOLU JASWANTH SRINATH
2020-21	Electronics and Communication Engineering	BONDADA SAI KRISHNA
2020-21	Electronics and Communication Engineering	BOLLINA SATYAKRISHNA
2020-21	Electronics and Communication Engineering	MALE THARUN MOHAN RAO NAIDU
2020-21	Electronics and Communication Engineering	MERUGU SATHWIK
2020-21	Electronics and Communication Engineering	KANDUKURI HARSHINI
2020-21	Electronics and Communication Engineering	ALLADA CHIRANJEEVI
2020-21	Electronics and Communication Engineering	GOTIKALA SURESH KUMAR
2020-21	Electronics and Communication Engineering	KARRI NAGASRI
2020-21	Electronics and Communication Engineering	KARAMCHETI JAHNAVI SUSMITHA

2020-21	Electronics and Communication Engineering	BODDETI SAI KISHORE
2020-21	Electronics and Communication Engineering	SIVALANKA SYAMALADEVI
2020-21	Electronics and Communication Engineering	VYSHNAVI DEVI KATTA
2020-21	Electronics and Communication Engineering	PAJJURI NAGA VENKATA SATYANARAYANA
2020-21	Electronics and Communication Engineering	VENKATA NAGA PHANIDRA EDUPUGANTI
2020-21	Electronics and Communication Engineering	PICHIKALA. KRISHNA VAMSI
2020-21	Electronics and Communication Engineering	CHALASANI MANEESHA
2020-21	Electronics and Communication Engineering	DEVU KALYANNAG
2020-21	Electronics and Communication Engineering	PAMARTHY KIRAN KUMAR
2020-21	Electronics and Communication Engineering	PUPPALA SNIGDHA
2020-21	Electronics and Communication Engineering	BOMMANABOINA PRATHIMA
2020-21	Electronics and Communication Engineering	BALUSU HAINDAVA CHANDRA SEKHAR
2020-21	Electronics and Communication Engineering	PARVATANENI SRAVANI
2020-21	Electronics and Communication Engineering	KOMMU AKHIL KUMAR
2020-21	Electronics and Communication Engineering	REDDI MEHER CHAITANYA
2020-21	Electronics and Communication Engineering	DASARI DEVIKA
2020-21	Electronics and Communication Engineering	ANDE CHANDU KUMAR
2020-21	Electronics and Communication Engineering	AMARLA ABHINASH
2020-21	Electronics and Communication Engineering	ALLU GOWTHAMI
2020-21	Electronics and Communication Engineering	JAYAMANGALA SANTHI PRIYA
2020-21	Electronics and Communication Engineering	PUJARI YUGANDHAR
2020-21	Electronics and Communication Engineering	BATTULA SANJAY KUMAR

2020-21	Electronics and Communication Engineering	SAYYAD ALISHA
2020-21	Electronics and Communication Engineering	BOMMAREDDI SAI SOWJANYA
2020-21	Electronics and Communication Engineering	KANDADAI DINESH RAJAN
2020-21	Electronics and Communication Engineering	KADALI PAVAN SAI
2020-21	Electronics and Communication Engineering	MULPURU MONIKA RANI
2020-21	Electronics and Communication Engineering	MORAMPUDI SAI SWAROOP
2020-21	Electronics and Communication Engineering	PARASA RAJA
2020-21	Electronics and Communication Engineering	YARAMALA RAJESH
2020-21	Electronics and Communication Engineering	CHENNURI BALA AYYAPPA
2020-21	Electronics and Communication Engineering	POTNURI SAI HARSHITHA
2020-21	Electronics and Communication Engineering	CHOWDARI BHARGAVI
2020-21	Electronics and Communication Engineering	MARAKA JASWANTH KUMAR
2020-21	Electronics and Communication Engineering	PECHETTI BABY HEMA
2020-21	Electronics and Communication Engineering	SIRIBATTINA GANA DEEP
2020-21	Electronics and Communication Engineering	GUJJARU VAMSI SAI NARENDRA
2020-21	Electronics and Communication Engineering	MRINAL UMMADISING
2020-21	Electronics and Communication Engineering	TUMMALA HARINI
2020-21	Electronics and Communication Engineering	EEDA KANAKA JYOTHI
2020-21	Electronics and Communication Engineering	VERUM MOHAN VENKATA SAI GANESH
2020-21	Electronics and Communication Engineering	KALAPALA PRANEETH
2020-21	Electronics and Communication Engineering	BALDA VIJAYA KUMAR
2020-21	Electronics and Communication Engineering	DUGGIRALA MANISHA

2020-21	Electronics and Communication Engineering	SOMANA KAVYA RUCHITHA
2020-21	Electronics and Communication Engineering	PUJARI ANILKUMAR
2020-21	Electronics and Communication Engineering	KANNIKANTI NAVYA
2020-21	Electronics and Communication Engineering	DASARI ARUNAKUMARI
2020-21	Electronics and Communication Engineering	BOLLA DURGA SAI TEJA
2020-21	Electronics and Communication Engineering	BETHINA SUBBA RAO
2020-21	Electronics and Communication Engineering	PALAVALASA PAVAN KUMAR
2020-21	Electronics and Communication Engineering	GHANTASALA SAI THRILOK
2020-21	Electronics and Communication Engineering	GARIKIPATI JYOTHI PRIYA
2020-21	Electronics and Communication Engineering	PANDI VAMSI KRISHNA
2020-21	Electronics and Communication Engineering	DALIPARTHI NAGA VENKATA SATHEESH SAI
2020-21	Electronics and Communication Engineering	KARRI DURGA KISHORE VARMA
2020-21	Electronics and Communication Engineering	PADMA ANUSHA PASUPULATI
2020-21	Electronics and Communication Engineering	UYYURI VENU
2020-21	Electronics and Communication Engineering	MANGARAJU SUJANA
2020-21	Electronics and Communication Engineering	SHAIK SULTHAN
2020-21	Electronics and Communication Engineering	DASARI SRIDHAR
2020-21	Electronics and Communication Engineering	KURALLA VENKATA NAGA DURGA SONIYA
2020-21	Electronics and Communication Engineering	MAMIDI DURGA SRINIVAS
2020-21	Electronics and Communication Engineering	SAMBAMGI MEENAKSHI
2020-21	Electronics and Communication Engineering	PAMARTHI RAMANJANEYULU
2020-21	Electronics and Communication Engineering	GUDLA NAGA SRIVALLI

2020-21	Computer Science Engineering	YEGGINA SATYA LAKSHMI DEEPIKA
2020-21	Computer Science Engineering	BORRA PRASANNA LAKSHMI AKHILA
2020-21	Computer Science Engineering	KANDREGULA LAKSHMI PRASANNA
2020-21	Computer Science Engineering	DAMERLA PADMA SREE
2020-21	Computer Science Engineering	IVATURI PUJA ANKITHA
2020-21	Computer Science Engineering	GUDDANTI GAYATHRI
2020-21	Computer Science Engineering	SUNKARA SUNEETHA
2020-21	Computer Science Engineering	KAVURI VENKATESH BABU
2020-21	Computer Science Engineering	KOLLA SAI DURGA TEJASWINI
2020-21	Computer Science Engineering	MALLELA SUMA SRI
2020-21	Computer Science Engineering	SONALI GUDURI
2020-21	Computer Science Engineering	DHARMATEJA KUCHIPUDI
2020-21	Computer Science Engineering	GAGGALA VIJAY VAMSI
2020-21	Computer Science Engineering	PITTA RANI SALOMI
2020-21	Computer Science Engineering	BOKKA VAMSI KIRAN
2020-21	Computer Science Engineering	DEVARAPALLI CHESWANTH SAI
2020-21	Computer Science Engineering	AKELLA RATNA SRI PRAVALLIKA
2020-21	Computer Science Engineering	MAHAMKALI GEETHIKA
2020-21	Computer Science Engineering	NEERUKATTU DIVYA
2020-21	Computer Science Engineering	GOTTAPU KURMAYA VARDHAN
2020-21	Computer Science Engineering	KOLUSU GEETHIKA
2020-21	Computer Science Engineering	JANGALA CHARITHA
2020-21	Computer Science Engineering	BADUGU DEEPTHI
2020-21	Computer Science Engineering	JAGARAPU MOHAN DURGA PRASAD
2020-21	Computer Science Engineering	GUNTUPALLI VENKATA NAGALAVANYA
2020-21	Computer Science Engineering	PUSAPATI SRAVANI
2020-21	Computer Science Engineering	KANKIPATI KAUTILYA
2020-21	Computer Science Engineering	MUNI BHASKAR
2020-21	Computer Science Engineering	MADDALA VASAVI ANUPAMA
2020-21	Computer Science Engineering	KEERTHI KAVYA
2020-21	Computer Science Engineering	MANJEETH SINGH
2020-21	Computer Science Engineering	VEGESNA GAYATRI MEGHANA
2020-21	Computer Science Engineering	PARSA CHANDANA
2020-21	Computer Science Engineering	SAGI TEJASWI
2020-21	Computer Science Engineering	CHERUKU ISAAC ABHINAV
2020-21	Computer Science Engineering	DEVARAPALLI LEELA KRISHNA VAMSI
2020-21	Computer Science Engineering	GUDALA SRINIJA
2020-21	Computer Science Engineering	ADDALA SATEESH KUMAR
2020-21	Computer Science Engineering	INDUKURI VENKATA LAKSHMI SHREYA
2020-21	Computer Science Engineering	NANGULURI KRISHNA KISHORE
2020-21	Computer Science Engineering	PEDDAPUDI NAGA DURGA
2020-21	Computer Science Engineering	THAMMALALA BHAVYA SRI
2020-21	Computer Science Engineering	ANJUM AARA
2020-21	Computer Science Engineering	DATLA MEGHANA

2020-21	Computer Science Engineering	SREEDHAR RITHANYA
2020-21	Computer Science Engineering	NUKALA KAVYASRI
2020-21	Computer Science Engineering	RUDRAPATI AJAY SATYA SAHIT
2020-21	Computer Science Engineering	MERUGUMALA NAGENDRA PRASAD
2020-21	Computer Science Engineering	KOLUSU URMILA
2020-21	Computer Science Engineering	BALIJI DIVYA
2020-21	Computer Science Engineering	GANNABATTULA MAHESHBABU
2020-21	Computer Science Engineering	T JEEVAN NAGA RANGA SAI TEJA
2020-21	Computer Science Engineering	PAILA PAVANESWARI
2020-21	Computer Science Engineering	AFREEN BEGUM
2020-21	Computer Science Engineering	KARI NAGA ANWESHITHA
2020-21	Computer Science Engineering	RAJABOINA LAKSHMI VARA PRASAD
2020-21	Computer Science Engineering	PAKALAPATI SUSHMA
2020-21	Computer Science Engineering	EJNA PRAVEENA SARIDE
2020-21	Computer Science Engineering	KARRI MEENA SRAVANI
2020-21	Computer Science Engineering	MANTHRAVADI SRI RAMA MURTHY
2020-21	Computer Science Engineering	MOUNIKA KANIKANTHI
2020-21	Computer Science Engineering	KOLLA ARAVIND
2020-21	Computer Science Engineering	MUSUNURI YAMINI
2020-21	Computer Science Engineering	PARVATHANENI NAVYASRI
2020-21	Computer Science Engineering	GOTTUMUKKALA MANASA
2020-21	Computer Science Engineering	DARBHA SOWMYA SARVANI
2020-21	Computer Science Engineering	GANTA SIREESHA
2020-21	Computer Science Engineering	GOLLU SAI KRISHNA
2020-21	Computer Science Engineering	CHEGONDI AKHILA
2020-21	Computer Science Engineering	CHODE RAM TEJA
2020-21	Computer Science Engineering	KARRI GOUTHAM
2020-21	Computer Science Engineering	PASUMARTHY GAYATRI SAI PRASANNA
2020-21	Computer Science Engineering	BEZAWADA SRAVANI
2020-21	Computer Science Engineering	SHAIK UMERA ANJUM
2020-21	Computer Science Engineering	THOTA TEJA VEERASAI
2020-21	Computer Science Engineering	DASARI AVINESH
2020-21	Computer Science Engineering	BANDI SOWJANYA
2020-21	Computer Science Engineering	PINNAMANENI NANDINI DEVI
2020-21	Computer Science Engineering	JUJJUVARAPU ANUSRI
2020-21	Computer Science Engineering	B SOWRYA VARA PRASAD RAYULU
2020-21	Computer Science Engineering	NEHA THONTA
2020-21	Computer Science Engineering	MUCHARLA SRAVYA

2020-21	Computer Science Engineering	JUJJUVARAPU VISWANAGA SAI
2020-21	Computer Science Engineering	KILARAPU SURYA SAIESWAR PRATAP
2020-21	Computer Science Engineering	SANAPALA NEERAJA
2020-21	Computer Science Engineering	BADIPATLA SNIGDHA
2020-21	Computer Science Engineering	PILLI ASHOK
2020-21	Computer Science Engineering	KONDAPALLIKEERTHANA
2020-21	Computer Science Engineering	KOMMANA PRAVALLIKA
2020-21	Computer Science Engineering	BIRAVAVAJHALA SAIPAVANI
2020-21	Computer Science Engineering	YATHAM PUSHPANJALI
2020-21	Computer Science Engineering	RAJULAPATI AKHIL
2020-21	Computer Science Engineering	VANNEMREDDYISHWARYA
2020-21	Computer Science Engineering	ALLURI PHANI RESHMA
2020-21	Computer Science Engineering	REDDI RAMYA
2020-21	Computer Science Engineering	KESARI JAGADEESWARI
2020-21	Computer Science Engineering	MOGAL FAHEEMATHABUSUM
2020-21	Computer Science Engineering	KAMMA TEJASWEE
2020-21	Computer Science Engineering	TADIKONDA JAYAVENKATA LASHMI
2020-21	Computer Science Engineering	MOGANTI. SAI DEEP
2020-21	Computer Science Engineering	KUMBHAM LAHARI
2020-21	Computer Science Engineering	MADDURI NAGA RAJASAI KAMESH
2020-21	Computer Science Engineering	GUNTUREDDY SAIGANESH
2020-21	Computer Science Engineering	TALASILA LAHARI
2020-21	Computer Science Engineering	JAMPANI PRIYANKA
2020-21	Computer Science Engineering	SAJJA SAI SANDHYARANI
2020-21	Computer Science Engineering	SRUJANA GOLLA
2020-21	Computer Science Engineering	KOPPAKA CHAITANYAKUMAR
2020-21	Computer Science Engineering	ARIGELA SRIPOOJITHA
2020-21	Computer Science Engineering	JUJJAVARAPU UMAKRISHNA SRI
2020-21	Computer Science Engineering	VEDALA JAHNAVIMEGHANA
2020-21	Computer Science Engineering	JUJJUVARAPUTEJASWINI
2020-21	Computer Science Engineering	MANDALAPU. REETHIKA
2020-21	Computer Science Engineering	NARRA VENKATACHANDU
2020-21	Computer Science Engineering	KESARI NAGA RAMYA
2020-21	Computer Science Engineering	LAKKARAJU NAGABHAVYA
2020-21	Computer Science Engineering	TONTA VIJAYALAKSHMI
2020-21	Computer Science Engineering	MULPURU SNEHITHA
2020-21	Computer Science Engineering	GUDIPUDI RAKESHCHANTI
2020-21	Master of Business Administration	ABBADASARI RAJANI
2020-21	Master of Business Administration	ADAPA NAGANJANEYULU
2020-21	Master of Business Administration	ALAPATI BINDU SRI

2020-21	Master of Business Administration	ANNAM DURGA MADHAVI
2020-21	Master of Business Administration	ANNAVARAPU MAMATHA
2020-21	Master of Business Administration	ARAVA LALITHA DEVI
2020-21	Master of Business Administration	ARIPAKA SAI VENKATA RAMANA
2020-21	Master of Business Administration	BAKKA ANUSHA
2020-21	Master of Business Administration	BALE PEDDIRAJU
2020-21	Master of Business Administration	BALE SUJEEVA MANI
2020-21	Master of Business Administration	BALINA GIRIJA
2020-21	Master of Business Administration	BATHINA NAGALAKSHMI
2020-21	Master of Business Administration	BHEEMASINGU GOWTHAM
2020-21	Master of Business Administration	BHOGA ANUSHA SAI
2020-21	Master of Business Administration	BHOGOLU BALARAJESWARI
2020-21	Master of Business Administration	BODA SUMATHI
2020-21	Master of Business Administration	BOMMAGANI V KANYAKA SRI MANI MAHESWAR
2020-21	Master of Business Administration	BOMMISETTY VENU PRIYANKA
2020-21	Master of Business Administration	BORRA SAI SRINIVAS
2020-21	Master of Business Administration	BUGGALA SAI JYOTHI
2020-21	Master of Business Administration	BUSANABOINA VENKATA SAILAJA
2020-21	Master of Business Administration	CHEKURTHI GAYATHRI
2020-21	Master of Business Administration	CHELLI AYYAPPA
2020-21	Master of Business Administration	CHEPENA ANNAPURNA
2020-21	Master of Business Administration	CHINNAM SUDHEER KUMAR

2020-21	Master of Business Administration	CHODEY MOHAN KRISHNA
2020-21	Master of Business Administration	CHODIMELLA PHANI KUMAR
2020-21	Master of Business Administration	CHOUTAPALLI SRAVANI
2020-21	Master of Business Administration	DARSANAM NIRMALA
2020-21	Master of Business Administration	DEBARIKI DEVA MATHA
2020-21	Master of Business Administration	DEVARAPALLI KALYAN
2020-21	Master of Business Administration	DUMPALA RAMA TULASI
2020-21	Master of Business Administration	ENIKEPALLI LAVA KISHORE
2020-21	Master of Business Administration	GATTA NAGA MOUNICA PRIYANKA
2020-21	Master of Business Administration	GEDDAM ESWAR
2020-21	Master of Business Administration	GELAM RAJESH
2020-21	Master of Business Administration	GORRELA PUJITHA
2020-21	Master of Business Administration	GORRILA GOPI
2020-21	Master of Business Administration	GOTTAPU PRAVALLIKA
2020-21	Master of Business Administration	GUDLAVALLETI DIVYA
2020-21	Master of Business Administration	GULIPALLI SHANMUKHA KUMAR
2020-21	Master of Business Administration	VUTUKURI JYOTHSNA
2020-21	Master of Business Administration	INTI PANDU BABU
2020-21	Master of Business Administration	JANAPAREDDY PREETHI
2020-21	Master of Business Administration	JANGALA SAHITI NAGA VENKATA ANILA
2020-21	Master of Business Administration	K VINUTHNA
2020-21	Master of Business Administration	KALI PADMA

2020-21	Master of Business Administration	KALLA TIRUMALA DEVI
2020-21	Master of Business Administration	KANCHI JAYA SRI
2020-21	Master of Business Administration	KANDEPU SIVA RAMA KRISHNA
2020-21	Master of Business Administration	KANDIKATTU VINEETHA
2020-21	Master of Business Administration	KANNURI NAVEEN KUMAR
2020-21	Master of Business Administration	DARA SHELCIA
2020-21	Master of Business Administration	KARICHERLA PAVAN CHAND
2020-21	Master of Business Administration	KARRA AJAY BABU
2020-21	Master of Business Administration	KARRI TEJA SAI KUMAR
2020-21	Master of Business Administration	KOLA RAJ KUMAR
2020-21	Master of Business Administration	KOLUSU VEERA PAVANI
2020-21	Master of Business Administration	KOMMINI MANEESHA
2020-21	Master of Business Administration	KONCHADA JAYA LAKSHMI
2020-21	Master of Business Administration	KONJARLA SURESH
2020-21	Master of Business Administration	KORAM RAJNAVEEN
2020-21	Master of Business Administration	KUNCHANAPALLI MOUNIKA
2020-21	Master of Business Administration	KUNCHE ASHA JYOTHI
2020-21	Master of Business Administration	KURUKURI PRAVEEN
2020-21	Master of Business Administration	M DURGA NAGENDRA
2020-21	Master of Business Administration	MAAVURI SAI RAMARAO
2020-21	Master of Business Administration	MADDUKURI VINEETHA
2020-21	Master of Business Administration	MAJJI HRUDAYASAMUKA

2020-21	Master of Business Administration	MAJJI PREMSAI
2020-21	Master of Business Administration	MALLEMPALLI NAGA PADMAVATHI
2020-21	Master of Business Administration	MAMIDIPALLI NAGA DURGA GANITHA
2020-21	Master of Business Administration	MANAPURAM SAI KUMAR
2020-21	Master of Business Administration	MANGALAPALLI SATYA SUNDARA KATYAYANI
2020-21	Master of Business Administration	MANTRIPRAGADA VENU KUMAR
2020-21	Master of Business Administration	MARADANI RAMA DEVI
2020-21	Master of Business Administration	MEDIKONDA MAHESH BABU
2020-21	Master of Business Administration	MOKKIRALA VENKATA RAVI SANKAR
2020-21	Master of Business Administration	MUDEDLA HEMANTH
2020-21	Master of Business Administration	MUMMADI MOUNISRI
2020-21	Master of Business Administration	MUSUNURI MOUNIKA
2020-21	Master of Business Administration	N KRANTHI
2020-21	Master of Business Administration	N SRI PRIYANKA
2020-21	Master of Business Administration	YALAMANCHILI VENKATA SATYA SAI TARUN
2020-21	Master of Business Administration	NAGATHOTA SUSMITHA
2020-21	Master of Business Administration	NAKKA ASRITHA
2020-21	Master of Business Administration	NAKKA GOWTHAM
2020-21	Master of Business Administration	NAKKA SIVANAGA RAJU
2020-21	Master of Business Administration	NALLAPATI RETHAN SUNDAR SAIKUMAR
2020-21	Master of Business Administration	NARANANI NAGA SAI RAM
2020-21	Master of Business Administration	NARAVULA MOUNIKA

2020-21	Master of Business Administration	NARRA NAGA SWAPNA
2020-21	Master of Business Administration	NUTHI RAMA DEVI
2020-21	Master of Business Administration	PADAMATA DURGA PRASAD
2020-21	Master of Business Administration	PAJJURI RAJITHA
2020-21	Master of Business Administration	PAKANATI SRINIVASA RAO
2020-21	Master of Business Administration	PALIVELA SUNDARA SAI RAVI KIRAN
2020-21	Master of Business Administration	PAMARTHI LEELA ASHOK
2020-21	Master of Business Administration	PAMARTHI MEENAKSHI
2020-21	Master of Business Administration	PAMARTI SAIBABU
2020-21	Master of Business Administration	PAPPU ANESH
2020-21	Master of Business Administration	PATTAPU SAI RAGHU VARDHAN
2020-21	Master of Business Administration	PEDDINTI DURGA DEEPIKA
2020-21	Master of Business Administration	PEDDINTI NAGA SAI PRATHYUSHA
2020-21	Master of Business Administration	PEETHALA DIVYA
2020-21	Master of Business Administration	PEETHANI KALYANI
2020-21	Master of Business Administration	PILLI RAJESH
2020-21	Master of Business Administration	PODILA ANUSHA
2020-21	Master of Business Administration	POLAGANI GIRISH KUMAR
2020-21	Master of Business Administration	POOJARI DIVYA NAGA LAKSHMI
2020-21	Master of Business Administration	POTRU RATALU
2020-21	Master of Business Administration	RAHUL RAJ KSHATRI
2020-21	Master of Business Administration	RAMANUJA LAKSHMI KISHORE

2020-21	Master of Business Administration	RAVULA MEGHANA
2020-21	Master of Business Administration	REVELLA MANOHAR
2020-21	Master of Business Administration	SAPPA SINDHU PRIYA
2020-21	Master of Business Administration	SARAKANAM SAI MANIKANTA
2020-21	Master of Business Administration	SARVADEVABHATLA SAI SUPRIYA
2020-21	Master of Business Administration	SARVADEVABHATLA SATYA LAKSHMI MOUNIKA
2020-21	Master of Business Administration	SEELAM PAVANKUMAR
2020-21	Master of Business Administration	SETTI RAMYA
2020-21	Master of Business Administration	SIGIREDDY ANITHA
2020-21	Master of Business Administration	SINGIREDDY DIMPLE PRIYA
2020-21	Master of Business Administration	SIRIGIBATTULA VENKATESWARA RAO
2020-21	Master of Business Administration	SUDIKONDA HIMABINDUSRI
2020-21	Master of Business Administration	SULAGAM MAHENDRA
2020-21	Master of Business Administration	SUNDRU PRAVALLIKA
2020-21	Master of Business Administration	SUNKARA HARIKA
2020-21	Master of Business Administration	SWARNALA NAGA LAKSHMANARAO
2020-21	Master of Business Administration	T YASODA
2020-21	Master of Business Administration	TAKE GOVIND
2020-21	Master of Business Administration	TANANKI ANJIBABU
2020-21	Master of Business Administration	TANETI ANUSHA
2020-21	Master of Business Administration	TENTU NAGA SIVA DURGA VARA PRASAD KUMA
2020-21	Master of Business Administration	THOTA HARSHITHA GAYATRI

2020-21	Master of Business Administration	URIMI ATCHYUTH
2020-21	Master of Business Administration	VANGALA SAI SANDEEP
2020-21	Master of Business Administration	VANKALA JAYA SREE
2020-21	Master of Business Administration	VANNEMREDDYBHARGAVI
2020-21	Master of Business Administration	VARANASI VIJAY KUMAR
2020-21	Master of Business Administration	VEEDHI NAGA DURGA SRIMANNARAYANA
2020-21	Master of Business Administration	VEERAVALLI PADMAJA
2020-21	Master of Business Administration	VENKATA PRIYANKA DEVARAKONDA
2020-21	Master of Business Administration	VIGNAN NAGA TEJA JAVVADI
2019-20		
2019-20	Civil Engineering	ALLAMPALLI SRI RANGA PRASAD(PROJECT)
2019-20	Civil Engineering	BATTULA AYYAPPA
2019-20	Civil Engineering	BEZAWADA MOUNIKA
2019-20	Civil Engineering	BODDU VENKATA SUSHMA
2019-20	Civil Engineering	CHADALAVADA BHUVANA SAI
2019-20	Civil Engineering	DOREPALLI MADHU SURYA VENKATA SATISH
2019-20	Civil Engineering	GEDDADA VENKATA SAI KUMAR
2019-20	Civil Engineering	GOLLA DHANYA SRI
2019-20	Civil Engineering	GUDIVADA SAI LAKSHMI
2019-20	Civil Engineering	JAMMU BHANU PRAKASH
2019-20	Civil Engineering	KETHA VENKATA RAGHU RAM
2019-20	Civil Engineering	KILLAMPALLI GOPICHAND
2019-20	Civil Engineering	KOMMANABOYINA HARIKA
2019-20	Civil Engineering	KUNJA ANUDEEP KUMAR
2019-20	Civil Engineering	MADALA MURALIKRISHNA
2019-20	Civil Engineering	MANEPALLI SUSMITHA
2019-20	Civil Engineering	MANUKONDA KRANTHI BHUSHAN
2019-20	Civil Engineering	MAREDDY TARAKA RAMUDU
2019-20	Civil Engineering	PAIDIPATI MANIKANTA
2019-20	Civil Engineering	PENTAPATI NIKHITHA SRIANJANI
2019-20	Civil Engineering	SAVANAMPUDI AVINASH BABU
2019-20	Civil Engineering	SHAIK NOUSHEEN FARHANA
2019-20	Civil Engineering	SRI SURYAKRISHNA ARJUN PUSULURI
2019-20	Civil Engineering	TERLY THARUN GURU MANI KUMAR
2019-20	Civil Engineering	TUMMALAPALLI PAVAN VISHNU GUPTHA

2019-20	Civil Engineering	ANGULURI SAI KUMAR
2019-20	Civil Engineering	BATTINA MEGHAMALA
2019-20	Civil Engineering	BOMMANABOINA LAKSHMI VINAYA KUMAR
2019-20	Civil Engineering	BUTTE SATYA SAI VEERA BRAHMAM
2019-20	Civil Engineering	CHEDUGUNDI ANAND BABU
2019-20	Civil Engineering	EEDA VENKATA BALA MANIKANTA SWAMY
2019-20	Civil Engineering	GANGULA LEELA ANIL
2019-20	Civil Engineering	GHANTASALA NARENDRA
2019-20	Civil Engineering	GORRELA CHARAN DURGA
2019-20	Civil Engineering	GORRELA LAKSHAMANA RAO
2019-20	Civil Engineering	GULIPALLI CHIRANJEEVI
2019-20	Civil Engineering	GUTTI LALITH KALYAN
2019-20	Civil Engineering	JOGI RAVI KISHORE
2019-20	Civil Engineering	KANCHARLA RAVI VARMA
2019-20	Civil Engineering	KOLLI CHANDRASEKHAR
2019-20	Civil Engineering	KONDAPADURI SAI PRAKASH
2019-20	Civil Engineering	MATTA NAGARAJU
2019-20	Civil Engineering	MEKA NAGENDRA
2019-20	Civil Engineering	MODHA SANDHYA RANI
2019-20	Civil Engineering	NACHHIREDDY SRINU
2019-20	Civil Engineering	NAGALLA MANIKANTA
2019-20	Civil Engineering	NARIKIMILLI BALA JAYA SAI SUREKHA
2019-20	Civil Engineering	PULLA LOKESH
2019-20	Civil Engineering	PUTHI NARASIMHA RAO
2019-20	Civil Engineering	RAVALAVALASA MALLESWARA RAO
2019-20	Civil Engineering	REVULAGADDA RAVI
2019-20	Civil Engineering	SEELAMSETTI TARUN SAI
2019-20	Civil Engineering	SUNKARA PHANI PAVANKALYAN
2019-20	Civil Engineering	VALIVETI SANDEEP
2019-20	Civil Engineering	VEERLA SAI RAM
2019-20	Civil Engineering	S.V.V. NAGENDRA BABU
2019-20	Civil Engineering	S PAVAN KUMAR
2019-20	Civil Engineering	T SAI KRISHNA
2019-20	Electrical and Electronics Enineering	VEERNALA SUPRIYA
2019-20	Electrical and Electronics Enineering	AMBATI PRASAD
2019-20	Electrical and Electronics Enineering	ANNAM SATISH
2019-20	Electrical and Electronics Enineering	ANUBOTHU SANDHYA
2019-20	Electrical and Electronics Enineering	AREPU VASAVI SRI LAKSHMI SAHIT

2019-20	Electrical and Electronics Enineering	ATHYEM HASANTHI
2019-20	Electrical and Electronics Enineering	BALUSU ASHOK
2019-20	Electrical and Electronics Enineering	BASAVARAJU SAI PAVAN HARISH
2019-20	Electrical and Electronics Enineering	BEJAWADA MANIKANTA MANOJ KUMAR
2019-20	Electrical and Electronics Enineering	BONDA HARIKA
2019-20	Electrical and Electronics Enineering	BUDUMURU RAJKUMAR
2019-20	Electrical and Electronics Enineering	CHADARASI NAGA SUNEEL
2019-20	Electrical and Electronics Enineering	CHALLA SAI PAVAN
2019-20	Electrical and Electronics Enineering	CHEBATHINA HARIKIRAN
2019-20	Electrical and Electronics Enineering	CHEEMALA MOHAN
2019-20	Electrical and Electronics Enineering	CHIDAGAM BHASKAR
2019-20	Electrical and Electronics Enineering	CHIKKALA SUVARNA DURGA SAILAKS
2019-20	Electrical and Electronics Enineering	CHILAKALA JOSHNA ANVITHA
2019-20	Electrical and Electronics Enineering	CHILUVURI LAKSHMI SRAVANI
2019-20	Electrical and Electronics Enineering	CHOPPAVARAPU NIKHITHA
2019-20	Electrical and Electronics Enineering	DEGALA NAGA SAI GAYATHRI DEVI
2019-20	Electrical and Electronics Enineering	DOKALA CHAITHANYA RANGA PRASAD
2019-20	Electrical and Electronics Enineering	DUNGA APSI
2019-20	Electrical and Electronics Enineering	DUSANAPUDI MOUNIKA
2019-20	Electrical and Electronics Enineering	GORLA SWETHA
2019-20	Electrical and Electronics Enineering	GUDIVAKA RAMYA BHARATHI
2019-20	Electrical and Electronics Enineering	JOGI LALITHA

2019-20	Electrical and Electronics Enineering	JOSHI POONAM SHARMA
2019-20	Electrical and Electronics Enineering	KADIMI VENKATESWARA RAO
2019-20	Electrical and Electronics Enineering	KAMMA NAGA SATYA RAMESH BABU
2019-20	Electrical and Electronics Enineering	KAMMOJU PRADEEP KUMAR
2019-20	Electrical and Electronics Enineering	KAMMOJU PRAMOD KUMAR
2019-20	Electrical and Electronics Enineering	KANISETTI SAI TEJA VINAY
2019-20	Electrical and Electronics Enineering	KARRI VIMALADEVI
2019-20	Electrical and Electronics Enineering	KARUTURI PAVAN KUMAR
2019-20	Electrical and Electronics Enineering	KATHULA NAGA TULASAMMA
2019-20	Electrical and Electronics Enineering	KATHULA SHANMUKHA KALYANA RAMA
2019-20	Electrical and Electronics Enineering	KILARAPU HARITHA PRIYA
2019-20	Electrical and Electronics Enineering	KOLLI JAGADEESH
2019-20	Electrical and Electronics Enineering	KOTTEDI JAGADESWARI
2019-20	Electrical and Electronics Enineering	KUCHIPUDI RAMGOPAL
2019-20	Electrical and Electronics Enineering	KUNKULLA JAYA SAI VENKATESH
2019-20	Electrical and Electronics Enineering	LANKA SOWMYA SRI
2019-20	Electrical and Electronics Enineering	MADHU SUNNY
2019-20	Electrical and Electronics Enineering	MERUGU SAIKUMAR
2019-20	Electrical and Electronics Enineering	MITTIREDDY SIVA SANKAR
2019-20	Electrical and Electronics Enineering	MOHAMMAD ISLAMUDDIN
2019-20	Electrical and Electronics Enineering	MOHAMMED ABDUL SALMAN
2019-20	Electrical and Electronics Enineering	MOPIDEVI HARI NAGA BASAVA SAI

2019-20	Electrical and Electronics Enineering	MOTRAPU CHANDU
2019-20	Electrical and Electronics Enineering	MUDI SAI VENKATA NIKHIL
2019-20	Electrical and Electronics Enineering	MULAKALA KAVYASRI
2019-20	Electrical and Electronics Enineering	ALLURI HANUMANSAI
2019-20	Electrical and Electronics Enineering	BAGADI RAVINDRA
2019-20	Electrical and Electronics Enineering	BALINA MOUNIKA
2019-20	Electrical and Electronics Enineering	BALINA VINOD KUMAR
2019-20	Electrical and Electronics Enineering	BOGARAM PREMCHAND
2019-20	Electrical and Electronics Enineering	BONGU SAI DHARMA TEJA
2019-20	Electrical and Electronics Enineering	BUSANABOYINA NAGA SIVA KUMAR
2019-20	Electrical and Electronics Enineering	DAGANI SANDHYA RANI
2019-20	Electrical and Electronics Enineering	DONGALA SATYANARAYANA
2019-20	Electrical and Electronics Enineering	GALI RAVI KUMAR
2019-20	Electrical and Electronics Enineering	GAVADRA MAHESH
2019-20	Electrical and Electronics Enineering	GINJETI CHANDRIKA BHANU DEVI
2019-20	Electrical and Electronics Enineering	MUPPURI VENKATESH
2019-20	Electrical and Electronics Enineering	MUSUNURI CHANDINI
2019-20	Electrical and Electronics Enineering	NALLAJARLA SURIBABU
2019-20	Electrical and Electronics Enineering	NALLURI NAVYA
2019-20	Electrical and Electronics Enineering	PALAPARTHI PUSHPAVINEETHA
2019-20	Electrical and Electronics Enineering	PALAVALASA SOWJANYA
2019-20	Electrical and Electronics Enineering	PALLAPOTHU RAMA PRASAD

2019-20	Electrical and Electronics Enineering	PANCHAKARLA SAI RAMA NEELIMA
2019-20	Electrical and Electronics Enineering	POLISETTI HEMANTH KRISHNA
2019-20	Electrical and Electronics Enineering	POTHARAJU LALITHA PRIYA
2019-20	Electrical and Electronics Enineering	POTLURI HITESH KRISHNA
2019-20	Electrical and Electronics Enineering	PRAGADA UDAY KIRAN
2019-20	Electrical and Electronics Enineering	PRUDHVI VEERENDRA SIVA SAI
2019-20	Electrical and Electronics Enineering	RAMISETTI MOUNIKA
2019-20	Electrical and Electronics Enineering	REVURI PRADEEP SAI KUMAR
2019-20	Electrical and Electronics Enineering	RYALI SRI VENKATA PADMA NAGA S
2019-20	Electrical and Electronics Enineering	SAKALA VARNIKA NAGESWARI
2019-20	Electrical and Electronics Enineering	SAMAVEDAM SHANMUKHI VIJAYA SRI
2019-20	Electrical and Electronics Enineering	SANKULA ANURAG SAI
2019-20	Electrical and Electronics Enineering	SARADHI GAYATRI
2019-20	Electrical and Electronics Enineering	SAYED BUSHRA
2019-20	Electrical and Electronics Enineering	SHAIK NIKKATH JAHAN
2019-20	Electrical and Electronics Enineering	SILARI JAYA SATYA SAI SREE VAN
2019-20	Electrical and Electronics Enineering	SURAPANENI VENKATA SUDHEER BAB
2019-20	Electrical and Electronics Enineering	THIVARI CHANDRIKA LAKSHMI PRIY
2019-20	Electrical and Electronics Enineering	THOKALA BHAGYASRI
2019-20	Electrical and Electronics Enineering	THOTA MAUNEESHA
2019-20	Electrical and Electronics Enineering	TIRUNAGARI VINITHA
2019-20	Electrical and Electronics Enineering	TUMMURI MANIKANTHA

2019-20	Electrical and Electronics Enineering	UPPALAPATI NAGARAJU
2019-20	Electrical and Electronics Enineering	UPPALAPATI RAMYA
2019-20	Electrical and Electronics Enineering	VANGALA GOPALA KRISHNA SAINATH
2019-20	Electrical and Electronics Enineering	VEERANKI LIKHITH KUMAR
2019-20	Electrical and Electronics Enineering	VEMULAPUDI H V V S SAI KUMAR
2019-20	Electrical and Electronics Enineering	YAJJALA VAMSI
2019-20	Electrical and Electronics Enineering	YAKKALA KESAVA NAGA VENKATA PA
2019-20	Electrical and Electronics Enineering	PAKALAPATI NAGA DILEEP
2019-20	Electrical and Electronics Enineering	GORRELA ESWARA DURGA PRASAD
2019-20	Electrical and Electronics Enineering	KARIBANDI SRINIVAS
2019-20	Electrical and Electronics Enineering	KATTA MADHAVI
2019-20	Electrical and Electronics Enineering	KOLAVANTI RATNAM
2019-20	Electrical and Electronics Enineering	KOTA SAI KRISHNA
2019-20	Electrical and Electronics Enineering	KOTHAPALLI NANDA KUMAR
2019-20	Electrical and Electronics Enineering	MAHIDHARA NAGA VENKATA SURYA K
2019-20	Electrical and Electronics Enineering	MATTA PAVAN KUMAR
2019-20	Electrical and Electronics Enineering	MIRIYALA PAVAN KALYAN
2019-20	Electrical and Electronics Enineering	MOHAMMED HUSSAIN SHARIFF
2019-20	Electrical and Electronics Enineering	MURALA ANIL KUMAR
2019-20	Electrical and Electronics Enineering	NIMMAGADDA ARUN KUMAR
2019-20	Electrical and Electronics Enineering	PANDURI DURGA PRASAD
2019-20	Electrical and Electronics Enineering	PINGULA AKHIL

2019-20	Electrical and Electronics Enineering	KOTESWARA RAO REDLAM
2019-20	Electrical and Electronics Enineering	SAGGURTHI PAVAN SAI KUMAR
2019-20	Electrical and Electronics Enineering	SINGAPARAPU BHANU PRAKASH
2019-20	Electrical and Electronics Enineering	THUMU VENKATA GANESH
2019-20	Electrical and Electronics Enineering	SINGIREDDY HARITHA
2019-20	Electrical and Electronics Enineering	BOLLINA VENKATA KALYAN
2019-20	Mechanical Engineering	NAGA AKHIL
2019-20	Mechanical Engineering	TULIMELLI RANGA NAGARJUNA
2019-20	Mechanical Engineering	ABBURI VIJAY PRABHU KIRAN
2019-20	Mechanical Engineering	A V BHASKAR REDDY
2019-20	Mechanical Engineering	A G VENKATA HAVISH
2019-20	Mechanical Engineering	BHATRAJU KUMARA SWAMY
2019-20	Mechanical Engineering	B S V PAVAN KUMAR
2019-20	Mechanical Engineering	BODDU SANDEEP KUMAR
2019-20	Mechanical Engineering	BONU NAVEEN
2019-20	Mechanical Engineering	BUNGA DIRESH KUMAR
2019-20	Mechanical Engineering	BURLU RAMA CHANDU
2019-20	Mechanical Engineering	CHEBATTINA NITISHAKUMAR
2019-20	Mechanical Engineering	CHILIKIRI HARISH BABU
2019-20	Mechanical Engineering	CHOPPELLI BHANU
2019-20	Mechanical Engineering	DATTADA YUGHANDHAR
2019-20	Mechanical Engineering	DIMMITI HANUMAN
2019-20	Mechanical Engineering	GADINI TULASI SAI KUMAR
2019-20	Mechanical Engineering	GAJJALA BOLA SAIKIRAN
2019-20	Mechanical Engineering	GEDDAM VISHAL
2019-20	Mechanical Engineering	GUDIPUDI AKSHAY KUMAR
2019-20	Mechanical Engineering	GURRAM GOPALA KRISHNA
2019-20	Mechanical Engineering	LAVETI TEJA KRISHNA
2019-20	Mechanical Engineering	J VISHNUVARDHAN
2019-20	Mechanical Engineering	K PRABUTEJA
2019-20	Mechanical Engineering	KAMMA AKHIL SAI
2019-20	Mechanical Engineering	KOLUSU THARUN
2019-20	Mechanical Engineering	KOMMA AYYAPPA SWAMY
2019-20	Mechanical Engineering	K B SUDHANVA
2019-20	Mechanical Engineering	KONATHAM DURGA RAVI KUMAR
2019-20	Mechanical Engineering	KUCHIPUDI RATNA PRASAD
2019-20	Mechanical Engineering	KUPPALA NAGA PRASAD
2019-20	Mechanical Engineering	IBBA VENKATESWARA RAO

2019-20	Mechanical Engineering	INDUKURI BAPI RAJU
2019-20	Mechanical Engineering	MADDIPATI SIVA SAI KRISHNA
2019-20	Mechanical Engineering	MADIREDDY RAJESH
2019-20	Mechanical Engineering	MANDA DURGA PRASAD
2019-20	Mechanical Engineering	MANIKALA VINAY KUMAR
2019-20	Mechanical Engineering	MORLA SAI
2019-20	Mechanical Engineering	MUGATHA ALLA SREENU
2019-20	Mechanical Engineering	M RAMA DURGA PAVAN
2019-20	Mechanical Engineering	MUTYALA SATYA SAI MANOHAR
2019-20	Mechanical Engineering	NARESH TAMMINENI
2019-20	Mechanical Engineering	NETHALA MADHU
2019-20	Mechanical Engineering	PALA NAGA HARI KRISHNA
2019-20	Mechanical Engineering	PARASA SAIKRISHNA
2019-20	Mechanical Engineering	P MOHAN SAI MANIKANTA
2019-20	Mechanical Engineering	PRATTI HANUMAN
2019-20	Mechanical Engineering	RAGAM TRINADH
2019-20	Mechanical Engineering	R VENKATA DURGA PRASAD
2019-20	Mechanical Engineering	SABBI RAVI
2019-20	Mechanical Engineering	SEPENI DURGAPRASAD
2019-20	Mechanical Engineering	SORNAPUDI AKHIL VENKATA SAI
2019-20	Mechanical Engineering	VABBALA REDDI PRUDHVI
2019-20	Mechanical Engineering	VADLAMUDI KARTHIK MANISH
2019-20	Mechanical Engineering	VENU GOPAL DAVULURI
2019-20	Mechanical Engineering	YARRA KAMAL KALYAN
2019-20	Mechanical Engineering	ADAPALA CHARAN
2019-20	Mechanical Engineering	AMRUTHALURI YASWANTH SAI
2019-20	Mechanical Engineering	ANGULURI KRISHNA PRASAD
2019-20	Mechanical Engineering	A BALA PRUDHVIRAJ
2019-20	Mechanical Engineering	BANAVATHU TEJA
2019-20	Mechanical Engineering	BODDAPATI ESWAR
2019-20	Mechanical Engineering	CHALLARI PRABHAKARA RAO
2019-20	Mechanical Engineering	CHAVALA MANIKANTA
2019-20	Mechanical Engineering	CHEDURTHIPATI VIJAY KUMAR
2019-20	Mechanical Engineering	CHORAGUDI MANOJ KUMAR
2019-20	Mechanical Engineering	GORIPARTHI PRAVEEN KUMAR
2019-20	Mechanical Engineering	G LAKSHMI RAMANJANEYULU
2019-20	Mechanical Engineering	K DHANUSH BABU
2019-20	Mechanical Engineering	KADHA JAGADEESWARA CHARI
2019-20	Mechanical Engineering	K R BALA PARVATHISWAR
2019-20	Mechanical Engineering	KALLA ESWAR KUMAR
2019-20	Mechanical Engineering	K CH S A N V SRI RAGHU
2019-20	Mechanical Engineering	KEDASI GOPI
2019-20	Mechanical Engineering	M VENKATA SAIRAM SUDHEER
2019-20	Mechanical Engineering	MADDALA SRINIVASA RAO

2019-20	Mechanical Engineering	MANDA SYAM PRABHU
2019-20	Mechanical Engineering	MANDAVALLI CHANDU
2019-20	Mechanical Engineering	MEKALA SATISH
2019-20	Mechanical Engineering	MERUGU SYAM
2019-20	Mechanical Engineering	MOHAMMED AFZALBASHA
2019-20	Mechanical Engineering	MUDEDLA KIRAN
2019-20	Mechanical Engineering	NALLAMOTHU JASWANTH
2019-20	Mechanical Engineering	PALLAGANI RAMBABU
2019-20	Mechanical Engineering	PATHIVADA NARASIMHAM
2019-20	Mechanical Engineering	POLUBOINA SIVA GANESH
2019-20	Mechanical Engineering	PULUSU SAI RAM
2019-20	Mechanical Engineering	SAMBHANGI SIVA SHANKAR
2019-20	Mechanical Engineering	SARAMPATI BHARATH
2019-20	Mechanical Engineering	SHAIK BAJI
2019-20	Mechanical Engineering	SHAIK KALESHA
2019-20	Mechanical Engineering	TAMATAPU SATISH CHANDRA
2019-20	Mechanical Engineering	TAMMALALA RAJESH
2019-20	Mechanical Engineering	TANGELLA PAVAN KALYAN
2019-20	Mechanical Engineering	TATINENI CHANIKYA SAI
2019-20	Mechanical Engineering	VALLARAPU RAJESH
2019-20	Mechanical Engineering	VAMISETTI TEJA KUMAR
2019-20	Mechanical Engineering	Y VENKATESWARA RAO
2019-20	Electronics and Communication Engineering	BODDU BHAVANI
2019-20	Electronics and Communication Engineering	BATHINA MANISHA SAI
2019-20	Electronics and Communication Engineering	BONDA RAMYA TEJASWI
2019-20	Electronics and Communication Engineering	ADI SAI PUNEETH
2019-20	Electronics and Communication Engineering	KADHA SRUTHY
2019-20	Electronics and Communication Engineering	KADALI KALYAN NARASIMHA
2019-20	Electronics and Communication Engineering	CHELAKANTI HARATHI
2019-20	Electronics and Communication Engineering	DASARI HEMANTH KUMAR
2019-20	Electronics and Communication Engineering	KALLEPALLI BHARGAVA SAI SIVA RAMA RAJU
2019-20	Electronics and Communication Engineering	BEERA VINAY KIRAN TEJA

2019-20	Electronics and Communication Engineering	BATCHU NITHYA SREE
2019-20	Electronics and Communication Engineering	GURIJALA BABJI
2019-20	Electronics and Communication Engineering	BANDARU ANIL KUMAR
2019-20	Electronics and Communication Engineering	DEVABATTULA DIVYA
2019-20	Electronics and Communication Engineering	AMARAPALLI MAHESH
2019-20	Electronics and Communication Engineering	DANDU HARSHITH CHAKRAVARTHI RAJU
2019-20	Electronics and Communication Engineering	AKULA CHANDINI NEERAJA
2019-20	Electronics and Communication Engineering	AMMU VENKATA SESHA MADHURYA
2019-20	Electronics and Communication Engineering	DEVARAPALLI SRINIVAS
2019-20	Electronics and Communication Engineering	GADDIGOPULA JAYA VENKATA MADHURI
2019-20	Electronics and Communication Engineering	CHENNAMSETTI NAGA NIKITHA
2019-20	Electronics and Communication Engineering	CHINTA NITEESH KUMAR
2019-20	Electronics and Communication Engineering	JUTRU NAVYA
2019-20	Electronics and Communication Engineering	ALTHI JAYA KARTHIK
2019-20	Electronics and Communication Engineering	BODDU MEENA
2019-20	Electronics and Communication Engineering	CHILUKURI PARVATHI SUKANYA
2019-20	Electronics and Communication Engineering	MERUGUMALA VANISRI
2019-20	Electronics and Communication Engineering	BALE KOTI BABU
2019-20	Electronics and Communication Engineering	GUMMALLA ANITHA
2019-20	Electronics and Communication Engineering	BOOSI SUNANDHA
2019-20	Electronics and Communication Engineering	ALLAVARAPU SESHU JAYANTH
2019-20	Electronics and Communication Engineering	GADHAMSETTI YASWANTH SAI KUMAR

2019-20	Electronics and Communication Engineering	BOMMAGANI SAILAJA
2019-20	Electronics and Communication Engineering	KADALI NANDA GOPI KRISHNA
2019-20	Electronics and Communication Engineering	DODDAPANENI PRASANNA LAKSHMI
2019-20	Electronics and Communication Engineering	BOLLINA BHOOMIKA
2019-20	Electronics and Communication Engineering	AKULA BHANU SHANKAR
2019-20	Electronics and Communication Engineering	CHALLAGULLA LAKSHMI DURGA
2019-20	Electronics and Communication Engineering	BANTU DEEPTHI
2019-20	Electronics and Communication Engineering	GHANTASALA PAVAN KALYAN
2019-20	Electronics and Communication Engineering	BATTULA ANU SAI TARANGINI
2019-20	Electronics and Communication Engineering	CHEEDELLA GEETHA KRISHNA PRIYANKA
2019-20	Electronics and Communication Engineering	AMPAJALA GANGA NAGA SAI AKHILBABU
2019-20	Electronics and Communication Engineering	ATLURI SRAVANI
2019-20	Electronics and Communication Engineering	BODDU MOUNIKA
2019-20	Electronics and Communication Engineering	BOGADI PAYAL NAGAMBICA
2019-20	Electronics and Communication Engineering	DONTHA BALA KRISHNA
2019-20	Electronics and Communication Engineering	CHEPURI NAGA YAMINI
2019-20	Electronics and Communication Engineering	GANTA SAI HARI PRAKASH
2019-20	Electronics and Communication Engineering	CHAKALI VEERA LAKSHMI
2019-20	Electronics and Communication Engineering	GEDDAM SAI NEEHARIKA
2019-20	Electronics and Communication Engineering	BONTHU MURALIKRISHNA
2019-20	Electronics and Communication Engineering	BOLLINA UPENDRA
2019-20	Electronics and Communication Engineering	KATIKI YASASWINI

2019-20	Electronics and Communication Engineering	MARAKA POOJA
2019-20	Electronics and Communication Engineering	NALLU MUNI VENKATA SAI KUMAR
2019-20	Electronics and Communication Engineering	MARELLA HEMANTH CHOWDARY
2019-20	Electronics and Communication Engineering	MALLELA MAMATHA
2019-20	Electronics and Communication Engineering	NALLURI LAVANYA
2019-20	Electronics and Communication Engineering	MALIREDDY THIREESHA
2019-20	Electronics and Communication Engineering	KORU SANDEEP
2019-20	Electronics and Communication Engineering	KELLA KUSUMA PRIYA
2019-20	Electronics and Communication Engineering	KAMBHAMPATI MANIKANTA
2019-20	Electronics and Communication Engineering	NEKKALAPUDI NAGAPAVANI
2019-20	Electronics and Communication Engineering	KOMMAREDDI SOMANATH CHOWDARY
2019-20	Electronics and Communication Engineering	KATARE SAIDIVYA
2019-20	Electronics and Communication Engineering	KONAKALLA ISWARYA LAKSHMI DEVI
2019-20	Electronics and Communication Engineering	KOPPINEEDI DEEPIKA
2019-20	Electronics and Communication Engineering	GAMPALA YESWANTH KUMAR
2019-20	Electronics and Communication Engineering	KOMAL KUMARI
2019-20	Electronics and Communication Engineering	KAMMA SOWMYA
2019-20	Electronics and Communication Engineering	MALIREDDY JAHNAVI
2019-20	Electronics and Communication Engineering	KONATAM RAGHU BABU
2019-20	Electronics and Communication Engineering	MEKALA DURGA BHAVANI
2019-20	Electronics and Communication Engineering	NIMMAKAYALA SAI SINDHU
2019-20	Electronics and Communication Engineering	BODDETI PAVAN KALYAN

2019-20	Electronics and Communication Engineering	MALLA PRADEEP
2019-20	Electronics and Communication Engineering	MANIKALA KALYANI
2019-20	Electronics and Communication Engineering	MALLA DHANA LAKSHMI
2019-20	Electronics and Communication Engineering	MADDIPATLA BHARGAV
2019-20	Electronics and Communication Engineering	NALLANA CHANDRA VARDHAN
2019-20	Electronics and Communication Engineering	GARIGANTI VAMSIKRISHNA
2019-20	Electronics and Communication Engineering	KAMMA SRUTHI
2019-20	Electronics and Communication Engineering	MOHAMMAD JUNED AFTAB
2019-20	Electronics and Communication Engineering	KANDULA MANI KANTA SWAMI
2019-20	Electronics and Communication Engineering	NALLAJERLA B V V S S MANIMANJARI
2019-20	Electronics and Communication Engineering	NALLURI PUJITHA
2019-20	Electronics and Communication Engineering	KOTIPALLI REVANTH
2019-20	Electronics and Communication Engineering	KANCHARLA PURNA SAI KISHAN
2019-20	Electronics and Communication Engineering	MATHAMSETTI SAI RAMYA
2019-20	Electronics and Communication Engineering	MANTHENA NAVYA
2019-20	Electronics and Communication Engineering	KOTTI SAI RAHUL
2019-20	Electronics and Communication Engineering	MANDA VAMSI SRINIVAS
2019-20	Electronics and Communication Engineering	MOHAMMAD ASMA PARVEEN
2019-20	Electronics and Communication Engineering	MANUKONDA ANITHA
2019-20	Electronics and Communication Engineering	KUCHIPUDI SAI KUMARI
2019-20	Electronics and Communication Engineering	MADAGALA DURGA PRASAD
2019-20	Electronics and Communication Engineering	KOTTE JEEVITHA

2019-20	Electronics and Communication Engineering	KOLLI HIMA SRI
2019-20	Electronics and Communication Engineering	MUKKU SAI KRISHNA MOHAN
2019-20	Electronics and Communication Engineering	NALLURI SAI KIRAN
2019-20	Electronics and Communication Engineering	MADUPALLI ANJANA SAI SRI LALITHA
2019-20	Electronics and Communication Engineering	NUKALA KARUNA
2019-20	Electronics and Communication Engineering	NARIPELLA KIRAN
2019-20	Electronics and Communication Engineering	LANKA PRABHU DEVA
2019-20	Electronics and Communication Engineering	MAHAMMAD RAHEELA
2019-20	Electronics and Communication Engineering	MOHAMMAD ABDUL AHAD
2019-20	Electronics and Communication Engineering	NAGIREDDY SAI PAVAN
2019-20	Electronics and Communication Engineering	MALAGALAPALLI ANIL KUMAR
2019-20	Electronics and Communication Engineering	SAPPA CHANDANA GANGA SHRAVANI
2019-20	Electronics and Communication Engineering	PEKETI RAMSAI
2019-20	Electronics and Communication Engineering	MADDULA SAI VINEETH
2019-20	Electronics and Communication Engineering	RONTE NAGA SATISH KUMAR
2019-20	Electronics and Communication Engineering	PERUMALLAPALLI STELLA BRIGHT
2019-20	Electronics and Communication Engineering	MOODELLA SIVA LAVANYA
2019-20	Electronics and Communication Engineering	SEERAM AKHIL
2019-20	Electronics and Communication Engineering	SUNKARA NAVEEN KUMAR
2019-20	Electronics and Communication Engineering	RAMADUGU V R N S RAMYA
2019-20	Electronics and Communication Engineering	PASUPULETI SAI LIKHITHA
2019-20	Electronics and Communication Engineering	PEDDIBOYANA RISHITHA

2019-20	Electronics and Communication Engineering	VUPPALA KRISHNA SAI
2019-20	Electronics and Communication Engineering	POLISETTI SATYA SAI
2019-20	Electronics and Communication Engineering	NUNNA MAHESH BABU
2019-20	Electronics and Communication Engineering	PENUKUDURU DURGA BHAVANI
2019-20	Electronics and Communication Engineering	PARAVATHANENI SHANMUKHA SAI
2019-20	Electronics and Communication Engineering	TATAPUDI SHRUTI PATRICIA
2019-20	Electronics and Communication Engineering	PARVATHANENI GAYATHRI
2019-20	Electronics and Communication Engineering	YARRA CHANDRA SEKHAR MURALI KRISHNA
2019-20	Electronics and Communication Engineering	PEDDU BHANU ANUSHA
2019-20	Electronics and Communication Engineering	SRIRAMA MOULIKA PREETHI
2019-20	Electronics and Communication Engineering	RAVVA NAGA PRIYANKA
2019-20	Electronics and Communication Engineering	VEGIREDDY JAHNAVI
2019-20	Electronics and Communication Engineering	POTHANA NEEL PAVAN SAI
2019-20	Electronics and Communication Engineering	SHAIK DILSHAD BEGUM
2019-20	Electronics and Communication Engineering	PICHIKALA DURGA DEDEEPYA
2019-20	Electronics and Communication Engineering	UNDAVALLI NAGA RAVIKRISHNA
2019-20	Electronics and Communication Engineering	PRAGALLAPATI VENKATA RAMANUJA
2019-20	Electronics and Communication Engineering	PULLEPU SUDEEPTHI
2019-20	Electronics and Communication Engineering	THOKALA SUDHEER
2019-20	Electronics and Communication Engineering	TADI SUNEETA
2019-20	Electronics and Communication Engineering	PALLAGANI NARESH KUMAR
2019-20	Electronics and Communication Engineering	SIDDAMSETTI CHANDANA

2019-20	Electronics and Communication Engineering	TAMMINENI VENKATA SUMA
2019-20	Electronics and Communication Engineering	PERAM VIJAYA DURGA
2019-20	Electronics and Communication Engineering	NUNNA JAGADEESH BABU
2019-20	Electronics and Communication Engineering	VADLAMUDI SAI MOUNIKA
2019-20	Electronics and Communication Engineering	VELAMALA BABA SAI SIMHA NANDINI
2019-20	Electronics and Communication Engineering	PALETI TEJASAI
2019-20	Electronics and Communication Engineering	VANJARAPU TEJASWI
2019-20	Electronics and Communication Engineering	REDDY NEEHARIKA
2019-20	Electronics and Communication Engineering	PENMETSA PAVITHRA
2019-20	Electronics and Communication Engineering	SUREDDY LAVANYA
2019-20	Electronics and Communication Engineering	YEGIREDDY SRAVANI
2019-20	Electronics and Communication Engineering	VADAVALLI NIHARIKA
2019-20	Electronics and Communication Engineering	VAMPUGANI KUMARI
2019-20	Electronics and Communication Engineering	REGU JAHNAVI SANDHYA
2019-20	Electronics and Communication Engineering	ULISI SURYA TEJA
2019-20	Electronics and Communication Engineering	UPPALAPATI ROJA
2019-20	Electronics and Communication Engineering	RYALI SRIMANOJ
2019-20	Electronics and Communication Engineering	PILLARISETTY SAIMOUNIKA
2019-20	Electronics and Communication Engineering	PRODDUKU EDWARD RICHARDS
2019-20	Electronics and Communication Engineering	RAYANKULA DIVYA SREE
2019-20	Electronics and Communication Engineering	SYAMALA KINNERA
2019-20	Electronics and Communication Engineering	PAIDIMARLA SAI PAVAN REDDY

2019-20	Electronics and Communication Engineering	PIDUGU SAI TANUJ
2019-20	Computer Science and Engineering	AADAPA CHANDRIKA
2019-20	Computer Science and Engineering	ACCHUTA SARIKA
2019-20	Computer Science and Engineering	ADDAGARLA KEETHI SAISRI
2019-20	Computer Science and Engineering	ALLADA LOHITHA
2019-20	Computer Science and Engineering	ALLAMSETTI SAI VAMSI
2019-20	Computer Science and Engineering	AREPALLI RAJESH
2019-20	Computer Science and Engineering	ATTULURI SAI MANIKANTA SRI RAMA SUMANTH
2019-20	Computer Science and Engineering	AYYUB KHAN
2019-20	Computer Science and Engineering	B LALITH SHIVA KUMAR
2019-20	Computer Science and Engineering	BANGARU KUSUMA GAYATHREEDEVI
2019-20	Computer Science and Engineering	BEESETTI ANUSHA
2019-20	Computer Science and Engineering	BEJAGAM VENKATA JAYADEV
2019-20	Computer Science and Engineering	BHUPATHIRAJU JYOTHIRMAYEE DEVI
2019-20	Computer Science and Engineering	BOPPANA SAI MOUNIKA
2019-20	Computer Science and Engineering	BUGATA RAVINDRA
2019-20	Computer Science and Engineering	BUGGALA NAGAMANI
2019-20	Computer Science and Engineering	CHALLAGOLLA CHARU HASINI
2019-20	Computer Science and Engineering	CHALLAGOLLA JAGADEESH
2019-20	Computer Science and Engineering	CHALLAGULLA GAAYATHRE
2019-20	Computer Science and Engineering	CHAPPIDI SAI SRI LATHA REDDY
2019-20	Computer Science and Engineering	CHILUKUBATHULA HARIKAPRIYA

2019-20	Computer Science and Engineering	CHITAKANA LOHITA
2019-20	Computer Science and Engineering	CHOWTAPALLI VEDAKANTHI
2019-20	Computer Science and Engineering	DAGANI HARI NAGA MAHESH
2019-20	Computer Science and Engineering	DASARI MAHESWARI
2019-20	Computer Science and Engineering	GADDAM SOMANATH DATTA
2019-20	Computer Science and Engineering	GADUPUDI LAKSHMI
2019-20	Computer Science and Engineering	GANNAMANI LEELA DEEPTHI
2019-20	Computer Science and Engineering	GOLLAKOTA SHASHA SAI VENKATA VIJAY DEEP
2019-20	Computer Science and Engineering	GORJI RESHMASUKANYA
2019-20	Computer Science and Engineering	GUJJULA ALEKHYA
2019-20	Computer Science and Engineering	GULLA MANOJ KUMAR
2019-20	Computer Science and Engineering	JANNU NEERAJA
2019-20	Computer Science and Engineering	JANYAVULA GOWTHAM SREE RAM
2019-20	Computer Science and Engineering	JAYAMANGALA SRAVANI DURGA
2019-20	Computer Science and Engineering	KADALI MADHU PRIYA
2019-20	Computer Science and Engineering	KAKARLA SARITHA
2019-20	Computer Science and Engineering	KANDIKONDA SAI SRUTHI
2019-20	Computer Science and Engineering	KANDUKURI SRIRAM
2019-20	Computer Science and Engineering	KASIBHOTLA SURYASAIMANASA
2019-20	Computer Science and Engineering	KATHULA DEVI
2019-20	Computer Science and Engineering	KAVALA SRUJANA NATH
2019-20	Computer Science and Engineering	KESANA BHARGAVI

2019-20	Computer Science and Engineering	KOKKIRIPATI ALEKHYA
2019-20	Computer Science and Engineering	KOLLI YASWANTH SAI
2019-20	Computer Science and Engineering	KORUKONDA MADHURI
2019-20	Computer Science and Engineering	KUMBHAM NANDINI
2019-20	Computer Science and Engineering	KUMPATI HIMAJA
2019-20	Computer Science and Engineering	KURUSETTI SAIANEESHA
2019-20	Computer Science and Engineering	LEKKALA LAVAKUMAR
2019-20	Computer Science and Engineering	MANDULA NAGA SAI AKHILA
2019-20	Computer Science and Engineering	VEGESNA SUSHMA
2019-20	Computer Science and Engineering	MADHABATHULA MOUNIKA NAGA DEVI
2019-20	Computer Science and Engineering	ANKAM SIVA VARA PRASAD
2019-20	Computer Science and Engineering	MOHAMMED MUZAHID
2019-20	Computer Science and Engineering	PALNATI ESWAR KUMAR
2019-20	Computer Science and Engineering	JANGAM KARUN KUMAR
2019-20	Computer Science and Engineering	AKKINENI VAMSI
2019-20	Computer Science and Engineering	VELAVALAPALLI LAKSHMI ANITHA
2019-20	Computer Science and Engineering	MAKKENA SAI SUJITH
2019-20	Computer Science and Engineering	MANCHINENI SANDHYASREE
2019-20	Computer Science and Engineering	MANJUSHA CHERUKURI
2019-20	Computer Science and Engineering	MANTRAMURTHY MONICA VEERA SAI LATHA
2019-20	Computer Science and Engineering	MARAKA KAVYA SATYA DEEPIKA
2019-20	Computer Science and Engineering	MD SAMEEVULLAH

2019-20	Computer Science and Engineering	MEDEPUDI ROHITH KUMAR
2019-20	Computer Science and Engineering	MODUMUDI SIVA PRASAD
2019-20	Computer Science and Engineering	MOHAMMAD AYESHA TASLIM
2019-20	Computer Science and Engineering	MOHAMMED SAJID
2019-20	Computer Science and Engineering	MULLAPUDI MADHURI
2019-20	Computer Science and Engineering	MURALA MOUNIKA
2019-20	Computer Science and Engineering	MYLAVARAPU SUSMITHA
2019-20	Computer Science and Engineering	NADAKUDURU SAI LAKSHMI PRASANNA
2019-20	Computer Science and Engineering	NAIDU JYOTHSNA
2019-20	Computer Science and Engineering	NAKKANABOINA KIRAN
2019-20	Computer Science and Engineering	NALLA VENKATA PAVAN KALYAN
2019-20	Computer Science and Engineering	NARNI SREE CHANDRAMOULI
2019-20	Computer Science and Engineering	NOCHARLA INDIRA
2019-20	Computer Science and Engineering	NUMBURI RAJESH VARMA
2019-20	Computer Science and Engineering	NUTHI RAVITEJA
2019-20	Computer Science and Engineering	PAILI SATYA SAI KUMAR
2019-20	Computer Science and Engineering	PANTAM VINAY KRISHNA
2019-20	Computer Science and Engineering	PAPPALA LEELA LAVANYA
2019-20	Computer Science and Engineering	PAPPURA DURGA BHAVANI
2019-20	Computer Science and Engineering	PASUPULETI SATYA VANI SRI
2019-20	Computer Science and Engineering	PENUBOYINA SAI PRASANNA LAKSHMI
2019-20	Computer Science and Engineering	PITCHIKA NAGA KUMARI MALLIKA

2019-20	Computer Science and Engineering	POTRU ADISESHU
2019-20	Computer Science and Engineering	PUSAPATI SIVAPRIYA
2019-20	Computer Science and Engineering	REDDINA SINDHUJA
2019-20	Computer Science and Engineering	SAI TEJA VASIREDDY
2019-20	Computer Science and Engineering	SAMANTHULA SAIDATTA ANUROOP
2019-20	Computer Science and Engineering	SARIDI SOWJANYA
2019-20	Computer Science and Engineering	SEPENI SRAVANI
2019-20	Computer Science and Engineering	SHAIK AFSANA BANU
2019-20	Computer Science and Engineering	SHAIK SHAHID
2019-20	Computer Science and Engineering	SIKAKOLLU DIVYA BINDU
2019-20	Computer Science and Engineering	SONALI RAI
2019-20	Computer Science and Engineering	SRIRAM RAJU KOVVURI
2019-20	Computer Science and Engineering	SURABATTULA JANA PRIYA
2019-20	Computer Science and Engineering	SUSANI VAMSI
2019-20	Computer Science and Engineering	TALUPULA AMULYA
2019-20	Computer Science and Engineering	TENATHI ANJANA DEVI
2019-20	Computer Science and Engineering	THOTA HARI KRISHNA
2019-20	Computer Science and Engineering	TIRIVEEDHI VENKATA DIVYA SRI
2019-20	Computer Science and Engineering	UNIKILI KHYATHI SRI GOWRI
2019-20	Computer Science and Engineering	UPPU RAMYA ISWARYA
2019-20	Computer Science and Engineering	URITI SURYA TEJA
2019-20	Computer Science and Engineering	VATSAVAI YATHEESHADEVI

2019-20	Computer Science and Engineering	VEERANKI PAVANI
2019-20	Computer Science and Engineering	VEERAVALLI N V SATYA LAKSHMI PRIYA
2019-20	Computer Science and Engineering	YARLAGADDA POOJAPRIYA
2019-20	Computer Science and Engineering	M.RAMESH KUMAR BABU
2019-20	Computer Science and Engineering	BETHAPUDI JYOTHI
2019-20	Computer Science and Engineering	KOPPULA SANTHI SAMADHANAM
2019 - 20	Computer Science and Engineering	ADAPA MOUNIKA
2019 - 20	Master of Business Administration	ANDRA DIVYA VANI
2019 - 20	Master of Business Administration	ANNAVARAPU NAGA SUMA SRI
2019 - 20	Master of Business Administration	B N V ANJALI LAKSHMI VASAVI
2019 - 20	Master of Business Administration	MOVVA SAI PRUDHVI
2019 - 20	Master of Business Administration	BOTCHA MOHINI KUMARI
2019 - 20	Master of Business Administration	GUMMALLA D V SIVA SATYANARAYANA RAJU
2019 - 20	Master of Business Administration	GUNJE VENKATA RAMANA
2019 - 20	Master of Business Administration	VEMA S. R. VINEETH KUMAR
2019 - 20	Master of Business Administration	VEMULA HARIKA
2019 - 20	Master of Business Administration	ALAVA RAMYA KALYANI
2019 - 20	Master of Business Administration	BHOGI SATEESH
2019 - 20	Master of Business Administration	BOOSI YAMINI VENKATA LAKSHMI
2019 - 20	Master of Business Administration	BUGATHA RAJESWARI
2019 - 20	Master of Business Administration	BUSE PAVAN KALYAN
2019 - 20	Master of Business Administration	CHAMALLAMUDI NAVEEN

2019 - 20	Master of Business Administration	VAVILAPALLI MAHESH
2019 - 20	Master of Business Administration	GOLLU SATISH KUMAR
2019 - 20	Master of Business Administration	GONNURU SUPRIYA REDDY
2019 - 20	Master of Business Administration	KASINA GANESH
2019 - 20	Master of Business Administration	ANNAVARAPU SAI RAM
2019 - 20	Master of Business Administration	BEVARA NARAYANA RAO
2019 - 20	Master of Business Administration	CHINNALA VEERRAJU
2019 - 20	Master of Business Administration	DONDAPATI NAGA RAJU
2019 - 20	Master of Business Administration	GANDHAM TULASI KRISHNA
2019 - 20	Master of Business Administration	IMRAN SHAIK
2019 - 20	Master of Business Administration	KONDA SNEHA
2019 - 20	Master of Business Administration	KONKIMALLA RAVI TEJA
2019 - 20	Master of Business Administration	MEDAVARAPU PRATHIBHA
2019 - 20	Master of Business Administration	PALA JAYANTH SAI KISHORE
2019 - 20	Master of Business Administration	CHILLA RATNA KUMAR
2019 - 20	Master of Business Administration	CHINAKOTLA HARITHA
2019 - 20	Master of Business Administration	DADI SANDHAYA RANI
2019 - 20	Master of Business Administration	GORRELA MOUNIKA
2019 - 20	Master of Business Administration	GOTTAPU MADHU RAGINI
2019 - 20	Master of Business Administration	GUDISE HADASSA
2019 - 20	Master of Business Administration	ILLA MANI ANJANEYA
2019 - 20	Master of Business Administration	VIMALADEVI BONU

2019 - 20	Master of Business Administration	VURIVI NALINI
2019 - 20	Master of Business Administration	KESAPATNAPU JYOTHI SRUTHI
2019 - 20	Master of Business Administration	KATTA VEERA BABU
2019 - 20	Master of Business Administration	KONAGALLA KAMAKSHI SWETHA
2019 - 20	Master of Business Administration	KONDABOLU PRAVALLIKA
2019 - 20	Master of Business Administration	KONERU DEVENDRA NADH CHOWDARY
2019 - 20	Master of Business Administration	KOTHA CHANDANA SRI VYSHNAVI
2019 - 20	Master of Business Administration	KUCHIPUDI RAMGOPAL
2019 - 20	Master of Business Administration	KUMMARI BHAGYA RAJU
2019 - 20	Master of Business Administration	KUNUKU SUNEETA
2019 - 20	Master of Business Administration	YAJJUVARAPU SRI LAKSHMI
2019 - 20	Master of Business Administration	MADALA SAI VARSHINI
2019 - 20	Master of Business Administration	GOLI RAMYA REDDY
2019 - 20	Master of Business Administration	KONAKALLA JHANSILAKSHMI
2019 - 20	Master of Business Administration	KURAKULA LAKSHMI SINDUJA
2019 - 20	Master of Business Administration	JOGINIDI PANDU RANGA RAO
2019 - 20	Master of Business Administration	JONNADA JYOSTNA AMBICA
2019 - 20	Master of Business Administration	YADLAPALLI PRIYANKA
2019 - 20	Master of Business Administration	LOKALA PRASANTHI
2019 - 20	Master of Business Administration	M ROHITH SAI
2019 - 20	Master of Business Administration	MANDELA SRI LAKSHMI SRUJANA
2019 - 20	Master of Business Administration	MARISETTI JAGADEESH

2019 - 20	Master of Business Administration	MAMIDIPALLI JAGADEESH
2019 - 20	Master of Business Administration	MANDAVA PHANI TEJA
2019 - 20	Master of Business Administration	MAREEDU RAMESH
2019 - 20	Master of Business Administration	MEESALA DEVI SUJATHA
2019 - 20	Master of Business Administration	MERUGU RAMYASAI
2019 - 20	Master of Business Administration	MOHAMMAD AZIZUNNISA
2019 - 20	Master of Business Administration	MOHAMMAD RAZIA SULTANA
2019 - 20	Master of Business Administration	YARAKALA Jy NAGA SAI BHARAT KUMAR
2019 - 20	Master of Business Administration	YARRAMSETTI SAI RAM PRASAD
2019 - 20	Master of Business Administration	MOHAMMED SUFAN SUBHANI
2019 - 20	Master of Business Administration	MIDITIPATI H SAI AMBICA PHANINDHAR
2019 - 20	Master of Business Administration	MITTINTI ALEKHYA
2019 - 20	Master of Business Administration	MOGULOJI VENU GOPALACHARI
2019 - 20	Master of Business Administration	JORIGE PRABHAGNA
2019 - 20	Master of Business Administration	K KUSUMA
2019 - 20	Master of Business Administration	MOHAMMED FURKHAN
2019 - 20	Master of Business Administration	PAKALA NAGA RATNA PRASUNA
2019 - 20	Master of Business Administration	KAKUMANI LAVANYA
2019 - 20	Master of Business Administration	MADDU PREM CHAND
2019 - 20	Master of Business Administration	PALLEBOYINA PAVANI
2019 - 20	Master of Business Administration	MORAMPUDI CHANDANA KUMAR
2019 - 20	Master of Business Administration	MULA RAMI REDDY

2019 - 20	Master of Business Administration	MUNDURI V V S D SAIRAM
2019 - 20	Master of Business Administration	MURUGULA HEMANTH VENKATESH
2019 - 20	Master of Business Administration	NAGUBANDI MARINAGA DURGALAKSHMIBHAV
2019 - 20	Master of Business Administration	NALLA MANOHAR
2019 - 20	Master of Business Administration	NARAVULA N V KATYAYANI
2019 - 20	Master of Business Administration	NARVA MOHAN SAI KUMAR
2019 - 20	Master of Business Administration	PAKIRAM PAVAN KALYAN
2019 - 20	Master of Business Administration	YENUGA BHARGAVI
2019 - 20	Master of Business Administration	PALLELA SAI MOUNIKA
2019 - 20	Master of Business Administration	PAPPU DEVI SWETHA
2019 - 20	Master of Business Administration	SAMMITA VENKATA NAGA SESHU KUMAR
2019 - 20	Master of Business Administration	PUTHI MANI PRASANNA
2019 - 20	Master of Business Administration	SAMUDRALA G. V.MANEESHA
2019 - 20	Master of Business Administration	SAPPA JUHI LAVANYA
2019 - 20	Master of Business Administration	SEELAM SOWJANYA
2019 - 20	Master of Business Administration	SHAIK NAZEER
2019 - 20	Master of Business Administration	SHAIK SAIRABANU
2019 - 20	Master of Business Administration	SHAIK SAKHEENA BIBI
2019 - 20	Master of Business Administration	PAMPANA LAKSHMI NANDINI
2019 - 20	Master of Business Administration	PASAM HARANADH
2019 - 20	Master of Business Administration	PASUPULATI HARSHAVARDHAN
2019 - 20	Master of Business Administration	PASUPULETI NAGA SRIHARI

2019 - 20	Master of Business Administration	VASAMSETTI RAJESH
2019 - 20	Master of Business Administration	KANDULA HARI BABU
2019 - 20	Master of Business Administration	KARAPA SAILAJA
2019 - 20	Master of Business Administration	PUDI HEMA
2019 - 20	Master of Business Administration	PUJARI KRANTHI KUMAR
2019 - 20	Master of Business Administration	KALAKOTA SUMANTH
2019 - 20	Master of Business Administration	KALLEM JASHUA DANIEL
2019 - 20	Master of Business Administration	DARA LIZIA
2019 - 20	Master of Business Administration	RAGA SATHYA DEEPIKA KANIKANTI
2019 - 20	Master of Business Administration	RAJULAPATI JYOTHI
2019 - 20	Master of Business Administration	NALLURI SWATHI
2019 - 20	Master of Business Administration	SABBISETTY RUPESH BABU
2019 - 20	Master of Business Administration	SAYANI RAJESH DANI
2019 - 20	Master of Business Administration	SHAIK SHARMILA BEGUM
2019 - 20	Master of Business Administration	KANDIKATTU MAHALAKSHMI PADMAVATHI
2019 - 20	Master of Business Administration	CHOPPAVARAPU SIRISHA
2019 - 20	Master of Business Administration	SURINENI MANISHA
2019 - 20	Master of Business Administration	THAMMANA ARANI NAGA SAI DEVI
2019 - 20	Master of Business Administration	THOTA MANEESHA
2019 - 20	Master of Business Administration	TUNUGUNTLA RUPENDRA
2019 - 20	Master of Business Administration	VARA SHANTHI PRIYA
2019 - 20	Master of Business Administration	V V NAGA RAJU BUSANABOINA

2019 - 20	Master of Business Administration	CHOWDARI MAHESH
2019 - 20	Master of Business Administration	TADEPALLI NAGALAKSHMI SRIVYSHNAVI
2019 - 20	Master of Business Administration	TADEPALLI VENKATA MAHANTHY
2019 - 20	Master of Business Administration	VARRI KISHORE
2019 - 20	Master of Business Administration	KANURI RAMESH KUMAR
2019 - 20	Master of Business Administration	RAMINENI NAGA SAI
2019 - 20	Master of Business Administration	PATURI SAGAR
2019 - 20	Master of Business Administration	PINNINTI SWETHA PRIYA VANDANA
2019 - 20	Master of Business Administration	PRUDHVIRAJU NALLA
2019 - 20	Master of Business Administration	PALA KUMARA SWAMY
2019 - 20	Master of Business Administration	SHAIK ISMAIL
2019 - 20	Master of Business Administration	TATAVARTHI SAI BRAHMENDRA
2019 - 20	Master of Business Administration	THOTA ARAVIND
2018-19		
2018-19	Civil Engineering	P. KARTHEEK
2018-19	Civil Engineering	B.RAMESH
2018-19	Civil Engineering	N.NARASIMHA RAMARAO
2018-19	Civil Engineering	A MOHANA VENKATA KRISHNA
2018-19	Civil Engineering	AKULASIRISHA
2018-19	Civil Engineering	ATLURI VENKAT
2018-19	Civil Engineering	BALE LOKESH VARMA
2018-19	Civil Engineering	BAVISETTY TRIDEV
2018-19	Civil Engineering	BOLLU DEEP CHAND
2018-19	Civil Engineering	BOPPUDI PHANINDRA
2018-19	Civil Engineering	CHAGANTI TULASI MOHAN
2018-19	Civil Engineering	CHILUKURI HARITHA
2018-19	Civil Engineering	DUMPALA VIGNESWARA RAO
2018-19	Civil Engineering	EERLA TEJESWI
2018-19	Civil Engineering	GANTEDA DEEKSHA
2018-19	Civil Engineering	G SAI VAMSI KOTESWARA RAO
2018-19	Civil Engineering	G VENKATESWARA RAO

2018-19	Civil Engineering	GOWRU YOGENDRA PAVAN
2018-19	Civil Engineering	G N V KANAKA SITA MAHARAJU
2018-19	Civil Engineering	IBRAHIM ILAHI MOHAMMAD
2018-19	Civil Engineering	JAGABATHULA AKHILA
2018-19	Civil Engineering	JAYARAMACHANDRASEKHAR S
2018-19	Civil Engineering	KADIYALA JAYA LAKSHMI
2018-19	Civil Engineering	KAKOLLU RATNA YUVA TEJA
2018-19	Civil Engineering	KAMMA MANIKANTHA
2018-19	Civil Engineering	KANAKAMEDALA SAI GOPI
2018-19	Civil Engineering	KANKIPATI PRASAD
2018-19	Civil Engineering	KATRAGADDA DIVYA
2018-19	Civil Engineering	KAVULURU M V S S ARAVIND
2018-19	Civil Engineering	KOLA SRI KANTH
2018-19	Civil Engineering	KOLLI NAVYASRI
2018-19	Civil Engineering	KOLLU SRIRAM SWAROOP
2018-19	Civil Engineering	KORLAM SHYAMKUMAR
2018-19	Civil Engineering	K SATYA SIVA TEJA VARMA
2018-19	Civil Engineering	MAGANTI BHAVYA
2018-19	Civil Engineering	MANEPALLI SWARNA MANJARI
2018-19	Civil Engineering	MOGALLAPU MAHESH SAINATH
2018-19	Civil Engineering	MUNGARATHIMOTHI
2018-19	Civil Engineering	MUSUNOORI SAI PRASANNA
2018-19	Civil Engineering	NALLAMATI SALMON RAJU
2018-19	Civil Engineering	N PUSHPA VENKATA ANIRUDH
2018-19	Civil Engineering	PAMIREDDY JAYA BHARGAVI
2018-19	Civil Engineering	PILLA DEVI RAKESH
2018-19	Civil Engineering	PISINIGOPINADTH
2018-19	Civil Engineering	PURAMA NAGA DURGARAO
2018-19	Civil Engineering	P NAGA SAI SRI BALA VANI
2018-19	Civil Engineering	REVULAGADDA SPANDANA
2018-19	Civil Engineering	SAICHARAN CHOWDARY M
2018-19	Civil Engineering	SIVARAJU VARSHINI
2018-19	Civil Engineering	SUNKARA LAKSHMI SAHITHI
2018-19	Civil Engineering	THOTA BHANU KUMARI
2018-19	Civil Engineering	THUMMALA JOSHMITHA
2018-19	Civil Engineering	VAKADA BALA NAGARJUNA
2018-19	Civil Engineering	VANKADARU SUSMITHA
2018-19	Civil Engineering	VARASALA PRIYANKA
2018-19	Civil Engineering	AATHUKURI TONISRI
2018-19	Civil Engineering	ATMAKURI RAJESH
2018-19	Civil Engineering	BOBBILI NAVEENKUMAR
2018-19	Civil Engineering	BOTLA SATYANARAYANA
2018-19	Civil Engineering	BURIDI PRASADU
2018-19	Civil Engineering	EEDE LAKSHMI LAVANYA

2018-19	Civil Engineering	GAMPA GANESH
2018-19	Civil Engineering	GARISEPALLI HEMASAI
2018-19	Civil Engineering	JAKKULA NAVEENKUMAR
2018-19	Civil Engineering	K KAMALA NAGENDRA KUMA
2018-19	Civil Engineering	MARUBARIKI RAJU
2018-19	Civil Engineering	N VAISHNAVI SAI LAKSHM
2018-19	Civil Engineering	PAKKI HARIKA
2018-19	Civil Engineering	RAMANUJAM PRABHU PRASAD
2018-19	Civil Engineering	SUNKARA AVINASH
2018-19	Civil Engineering	V MADHUSUDHAN REDDY
2018-19	Civil Engineering	ABDUL SARDAR
2018-19	Civil Engineering	B.SURIBABU
2018-19	Civil Engineering	N.BHAVANI PRASAD
2018-19	Electrical and Electronics Enineering	ADARI SRINU
2018-19	Electrical and Electronics Enineering	AKKINENI MANOJ
2018-19	Electrical and Electronics Enineering	AKULA JAYANTHI
2018-19	Electrical and Electronics Enineering	ALLU NAGA BABU
2018-19	Electrical and Electronics Enineering	ALLU SAIKUMAR
2018-19	Electrical and Electronics Enineering	AMBATI SARATH KUMAR
2018-19	Electrical and Electronics Enineering	ARNEPALLI RAVI KIRAN
2018-19	Electrical and Electronics Enineering	AZAMERA MAHINDRA NAIK
2018-19	Electrical and Electronics Enineering	BHUMARAJU DAMODHAR RAJU
2018-19	Electrical and Electronics Enineering	BODHU MANOJ
2018-19	Electrical and Electronics Enineering	BOPPANA MANJUSHA
2018-19	Electrical and Electronics Enineering	BUDUMURU SOWMYA SREE
2018-19	Electrical and Electronics Enineering	CHENNUBOYINA RAVIKUMAR
2018-19	Electrical and Electronics Enineering	CHINTHALA VENKATESWARA RAO
2018-19	Electrical and Electronics Enineering	CHIRRAVURI SOWMYA

2018-19	Electrical and Electronics Enineering	DASARI AMANI SIVA SNEHA
2018-19	Electrical and Electronics Enineering	DEVARAKONDA VASANTHI
2018-19	Electrical and Electronics Enineering	DURGASI NAGA MALLESWARI
2018-19	Electrical and Electronics Enineering	GOTIKALA BABY HEPSIBA
2018-19	Electrical and Electronics Enineering	GUNDUBOINA NAGA PRAVEEN
2018-19	Electrical and Electronics Enineering	INGUVA DIVYA SATHYA SREE
2018-19	Electrical and Electronics Enineering	JALLA MANEESHA SIVA RAJ
2018-19	Electrical and Electronics Enineering	JUJJUVARAPU KANSHI RAM
2018-19	Electrical and Electronics Enineering	KAKARLA RAMYA KRISHNA
2018-19	Electrical and Electronics Enineering	KARE SANDHYA
2018-19	Electrical and Electronics Enineering	KESINA SAI MANIKANTHA
2018-19	Electrical and Electronics Enineering	KETHA KALYANI
2018-19	Electrical and Electronics Enineering	KOLAPALLI JYOTHIRMAI
2018-19	Electrical and Electronics Enineering	KOMAVARAPU ASHOK
2018-19	Electrical and Electronics Enineering	KONAKALLA RAMA CHANDRASEKHAR
2018-19	Electrical and Electronics Enineering	KUCHIPUDI NAGARAMYASRI
2018-19	Electrical and Electronics Enineering	KUNDURI SRINIVASRAO
2018-19	Electrical and Electronics Enineering	KURAPATI VINAY
2018-19	Electrical and Electronics Enineering	KURRAM VINAY KUMAR
2018-19	Electrical and Electronics Enineering	MADHYANAPU JITHENDRA VENKAT
2018-19	Electrical and Electronics Enineering	MAGANTI SAI HARSHA
2018-19	Electrical and Electronics Enineering	MAHALI LAKSHMI LAVANYA

2018-19	Electrical and Electronics Enineering	MANNEM APARNA
2018-19	Electrical and Electronics Enineering	MOHAMMAD DAFFINA BEGUM
2018-19	Electrical and Electronics Enineering	MORLA AKHIL KUMAR
2018-19	Electrical and Electronics Enineering	MUDUMUNTHALA SAI BABU
2018-19	Electrical and Electronics Enineering	MURRALA SAI LAKSHMI
2018-19	Electrical and Electronics Enineering	MUTTU DURGABHAVANI
2018-19	Electrical and Electronics Enineering	NALLA VENKATA MOHAN SAI RAM
2018-19	Electrical and Electronics Enineering	NANUBOLU JHANSI RANI
2018-19	Electrical and Electronics Enineering	NARAKONDA SUNIL KUMAR
2018-19	Electrical and Electronics Enineering	NERUSU KALYANI
2018-19	Electrical and Electronics Enineering	NITTA YASWANTH ANIL KUMAR
2018-19	Electrical and Electronics Enineering	PAKALA NAGA RATNA PRASUNA
2018-19	Electrical and Electronics Enineering	PAKALAPATI DINESHSAI
2018-19	Electrical and Electronics Enineering	PALLAGANI SURESH
2018-19	Electrical and Electronics Enineering	PALNATI MAHA LAKSHMI
2018-19	Electrical and Electronics Enineering	PASUPULETI SANDEEP
2018-19	MECHANICAL ENGINEERING	S RAJESH
2018-19	MECHANICAL ENGINEERING	TSAVALAM SAI KISHORE
2018-19	MECHANICAL ENGINEERING	AVURTHULA RAVI KUMAR
2018-19	MECHANICAL ENGINEERING	BADI ANILKUMAR
2018-19	MECHANICAL ENGINEERING	BALAM VENKATA SUBRAHMANYAM
2018-19	MECHANICAL ENGINEERING	BANDI VENKATESH

2018-19	MECHANICAL ENGINEERING	BASWANI VENKATA PRASAD
2018-19	MECHANICAL ENGINEERING	BATHINA VINAY
2018-19	MECHANICAL ENGINEERING	BATHINA YOGI NAGA SAI RAMA BHUVANESH
2018-19	MECHANICAL ENGINEERING	BEJJANKI NARENDRA
2018-19	MECHANICAL ENGINEERING	BEZAWADA SIVAIAH
2018-19	MECHANICAL ENGINEERING	BOLLA SATYA VARA PRASAD
2018-19	MECHANICAL ENGINEERING	BUGATA SATYA NARAYANA SAGAR
2018-19	MECHANICAL ENGINEERING	CHEKKA TEJOMURTHY
2018-19	MECHANICAL ENGINEERING	CHENNAPARAPU VENKATA KALYAN
2018-19	MECHANICAL ENGINEERING	CH NAGADURGAVARAPRASAD
2018-19	MECHANICAL ENGINEERING	CHIMATA VENKATA NAGA SAI KALYAN
2018-19	MECHANICAL ENGINEERING	CHINTAMANENI RAJESH
2018-19	MECHANICAL ENGINEERING	DASARI SHANMUKH
2018-19	MECHANICAL ENGINEERING	DENABOINA VENKATESH
2018-19	MECHANICAL ENGINEERING	DHANAMSETTY VENKATA RAMARAO
2018-19	MECHANICAL ENGINEERING	DODDA VENKATESWARLU
2018-19	MECHANICAL ENGINEERING	D V NAGA SAI PRUDHVIRAJU
2018-19	MECHANICAL ENGINEERING	DODDAPANENI RAGHU
2018-19	MECHANICAL ENGINEERING	PRUDHVI YASWANTH
2018-19	MECHANICAL ENGINEERING	DUDALA DHANUM JAYARAM
2018-19	MECHANICAL ENGINEERING	GADDAM VAMSI
2018-19	MECHANICAL ENGINEERING	GEDDAM JASWANTH

2018-19	MECHANICAL ENGINEERING	GOGINENI YASHVANT KUMAR
2018-19	MECHANICAL ENGINEERING	GUDIPALLI KUMAR
2018-19	MECHANICAL ENGINEERING	GUDLA JAI SAI NARAYANA
2018-19	MECHANICAL ENGINEERING	GUDURU KRISHNA SAI
2018-19	MECHANICAL ENGINEERING	GUNDAPU REVATHI
2018-19	MECHANICAL ENGINEERING	GURRAMPATI MASTAN VALLI
2018-19	MECHANICAL ENGINEERING	INDUKURI VIJAY PRUDHVI RAJU
2018-19	MECHANICAL ENGINEERING	INTI VINAY KUMAR
2018-19	MECHANICAL ENGINEERING	KALLURU SIVA SANKAR
2018-19	MECHANICAL ENGINEERING	KANCHARLA PREMSAI KUMAR
2018-19	MECHANICAL ENGINEERING	KARE DINESH KUMAR
2018-19	MECHANICAL ENGINEERING	KARE JEEVAN SAGAR
2018-19	MECHANICAL ENGINEERING	KARRI NIRANJAN
2018-19	MECHANICAL ENGINEERING	KATARI SAI KUMAR
2018-19	MECHANICAL ENGINEERING	KATARI VIJAY KUMAR
2018-19	MECHANICAL ENGINEERING	KATUMALA AKSHAY KUMAR
2018-19	MECHANICAL ENGINEERING	KOLLI ROHITH
2018-19	MECHANICAL ENGINEERING	K A VENKATA KRISHNA SAI
2018-19	MECHANICAL ENGINEERING	KOMMIREDDY NAGA AVINASH
2018-19	MECHANICAL ENGINEERING	KONDUBOYINA HEMANTH
2018-19	MECHANICAL ENGINEERING	KOTTAPALLI AYYAPPA REDDY
2018-19	MECHANICAL ENGINEERING	KOTTU SAI HANUMA KUMAR

2018-19	MECHANICAL ENGINEERING	KOYYALA NAGA SURYA TEJA
2018-19	MECHANICAL ENGINEERING	K V NAGA SIVA KUMAR
2018-19	MECHANICAL ENGINEERING	L B JANARDHANA RAO
2018-19	MECHANICAL ENGINEERING	LANKAPALLI JAGADEESH
2018-19	MECHANICAL ENGINEERING	L T DURGACHAITANYA
2018-19	MECHANICAL ENGINEERING	LEKKALA PRANAY SANJAY
2018-19	MECHANICAL ENGINEERING	MADDI RAHUL KUMAR
2018-19	MECHANICAL ENGINEERING	MAJJI ANAND
2018-19	MECHANICAL ENGINEERING	MANIKALA SURESH
2018-19	MECHANICAL ENGINEERING	MANNE VAMSI KRISHNA
2018-19	MECHANICAL ENGINEERING	MATTA SAI KUMAR
2018-19	MECHANICAL ENGINEERING	MEKALA KUMAR
2018-19	MECHANICAL ENGINEERING	MENDEM NIKIL
2018-19	MECHANICAL ENGINEERING	M V NAGA SAI KRISHNA
2018-19	MECHANICAL ENGINEERING	MOHAMMAD MANSOOR ALI
2018-19	MECHANICAL ENGINEERING	NANDETI SIVA KRISHNA
2018-19	MECHANICAL ENGINEERING	NARADALA NAGARAJU
2018-19	MECHANICAL ENGINEERING	NARAYANA MADHU
2018-19	MECHANICAL ENGINEERING	NERUSU VEERA RAJU
2018-19	MECHANICAL ENGINEERING	NUTHANAPATI NAVEEN KUMAR
2018-19	MECHANICAL ENGINEERING	PAKALAPATI RAGHU
2018-19	MECHANICAL ENGINEERING	PALAPARTHI JAIPAUL

2018-19	MECHANICAL ENGINEERING	PALLAGANI SATYA MANOJ
2018-19	MECHANICAL ENGINEERING	PAMARTHI SAIMARUTHI
2018-19	MECHANICAL ENGINEERING	PATTAPU RISHWANTH
2018-19	MECHANICAL ENGINEERING	POLAGANI AJITH KUMAR
2018-19	MECHANICAL ENGINEERING	PRAGADA SURESH
2018-19	MECHANICAL ENGINEERING	PUJARI VINAY KUMAR
2018-19	MECHANICAL ENGINEERING	PURITIPATI SAI ROSHINI
2018-19	MECHANICAL ENGINEERING	RAJULAPATI PRASAD
2018-19	MECHANICAL ENGINEERING	RAYI KRUPA SHAKER
2018-19	MECHANICAL ENGINEERING	REDDY UDAY SAI
2018-19	MECHANICAL ENGINEERING	S M V SAI HARSHAVARDHAN
2018-19	MECHANICAL ENGINEERING	SARIHADDU DANI PAUL
2018-19	MECHANICAL ENGINEERING	SARVEPALLI KEERTHANA
2018-19	MECHANICAL ENGINEERING	SHAIK ABDUL AZEEZ
2018-19	MECHANICAL ENGINEERING	SHAIK FEROZ
2018-19	MECHANICAL ENGINEERING	SHAIK NAWAB SALMAN
2018-19	MECHANICAL ENGINEERING	T N V RAMA SUBBARAO
2018-19	MECHANICAL ENGINEERING	TALARI PAVAN BHASKAR
2018-19	MECHANICAL ENGINEERING	TALLIBOYINA VIJAY KUMAR
2018-19	MECHANICAL ENGINEERING	THOTA ABISHEK KASTURISAI
2018-19	MECHANICAL ENGINEERING	TUTA SAI SAMPATH
2018-19	MECHANICAL ENGINEERING	VANJARAPU LAKSHMANA RAO

2018-19	MECHANICAL ENGINEERING	VASA TARUN TEJA
2018-19	MECHANICAL ENGINEERING	VELAGAPUDI GOWRINADH
2018-19	MECHANICAL ENGINEERING	VEMPATI YOGASRI SIVA RAJESH
2018-19	MECHANICAL ENGINEERING	Y M PHANI PAVAN SATISH
2018-19	MECHANICAL ENGINEERING	JISHNU
2018-19	MECHANICAL ENGINEERING	CHINNI SRINADH
2018-19	MECHANICAL ENGINEERING	DATTI SATISH KUMAR
2018-19	MECHANICAL ENGINEERING	DHANEKULA DURGA KRISHNA MOHAN
2018-19	MECHANICAL ENGINEERING	DONEPATI VINODKUMAR
2018-19	MECHANICAL ENGINEERING	GEDELA VENKATESWARARAO
2018-19	MECHANICAL ENGINEERING	GUNJI VENU
2018-19	MECHANICAL ENGINEERING	ILLA AJAY KUMAR
2018-19	MECHANICAL ENGINEERING	KAILA SAI RAM
2018-19	MECHANICAL ENGINEERING	MADHU NAGA SURENDRA BABA
2018-19	MECHANICAL ENGINEERING	MAHAMMAD GULSHANALI
2018-19	MECHANICAL ENGINEERING	MARRAPU PAVAN SAI
2018-19	MECHANICAL ENGINEERING	NUNNA PAVANA SURYA PANNAGESH
2018-19	MECHANICAL ENGINEERING	PODILAPU LOKESWARA RAO
2018-19	MECHANICAL ENGINEERING	POLINA GANESH
2018-19	MECHANICAL ENGINEERING	POTNURI DURGA PRASAD
2018-19	MECHANICAL ENGINEERING	RAVURI PAVAN
2018-19	MECHANICAL ENGINEERING	SIRIGIBATHULA NAGA VENKATA SRIKANTH

2018-19	MECHANICAL ENGINEERING	TAMADI ESWAR RAMKI
2018-19	MECHANICAL ENGINEERING	V BHASKARARAO VYKUNTAPU
2018-19	MECHANICAL ENGINEERING	VAVILALA BALAMANOHAR SAI
2018-19	MECHANICAL ENGINEERING	VEERAMALLA SIVA KUMAR
2018-19	MECHANICAL ENGINEERING	YARRAMSETTI VENAKATA SATYA PRASAD
2018-19	MECHANICAL ENGINEERING	YENUGU PRUDHVIRAJ
2018-19	MECHANICAL ENGINEERING	SINGAVARAPU CHANDRAMOULI
2018-19	Electronics and Communication Engineering	BANGARU UMA MAHESWARI
2018-19	Electronics and Communication Engineering	BAADARAVAADA MADHU SRI
2018-19	Electronics and Communication Engineering	DWARAPUDI BHAVANI SANKAR NAVEEN
2018-19	Electronics and Communication Engineering	BANGARAYA PULLA
2018-19	Electronics and Communication Engineering	CHALLAGULLA BALA CHANDRA
2018-19	Electronics and Communication Engineering	CHIVUKULA SAI TANUJA DEVI
2018-19	Electronics and Communication Engineering	JUJJUVARAPU KEERTHI PRAVEENA
2018-19	Electronics and Communication Engineering	CHODIMELLASUSEELA
2018-19	Electronics and Communication Engineering	BEJAWADA DURGA CHITTI SRINIVASARAO
2018-19	Electronics and Communication Engineering	CHEGONDI SRI SAI SUSHMA
2018-19	Electronics and Communication Engineering	ANDRA HARISH CHANDRA VENKATESH
2018-19	Electronics and Communication Engineering	GHANTA SATYA PHANI KRISHNA
2018-19	Electronics and Communication Engineering	DHUMPALA VENKATA SRAVANI
2018-19	Electronics and Communication Engineering	BIRAKA LAKSHMIPRIYA
2018-19	Electronics and Communication Engineering	JAGARLAMUDI SAI PRANEETHA

2018-19	Electronics and Communication Engineering	ALLADA SAI RAHUL
2018-19	Electronics and Communication Engineering	JOGI KANAKA MAHA LAKSHMI
2018-19	Electronics and Communication Engineering	DASARI NAGASATYANITHEESHA
2018-19	Electronics and Communication Engineering	AGURUPU DURGA PAVANI
2018-19	Electronics and Communication Engineering	BORRA VENKATA ROHIT KRISHNA
2018-19	Electronics and Communication Engineering	BALE AJAY CHANDRA
2018-19	Electronics and Communication Engineering	GUNUKULA MOHINI SIVA SARANYA
2018-19	Electronics and Communication Engineering	DAMARATHI SRINIVASA MOHAN
2018-19	Electronics and Communication Engineering	CHATLA BHAVANA DEEPIKA
2018-19	Electronics and Communication Engineering	INDUKURI VIJAYA LAKSHMI SHRAVYA
2018-19	Electronics and Communication Engineering	ALURI KARTHEEK
2018-19	Electronics and Communication Engineering	GEDDAM KODANDA RAMA RAO
2018-19	Electronics and Communication Engineering	GANDHAM SRI LAKSHMI SRINIVAS
2018-19	Electronics and Communication Engineering	GUDDATI MANOHARJOSHI
2018-19	Electronics and Communication Engineering	ARISEPALLI V V N K SAI KUMAR
2018-19	Electronics and Communication Engineering	DUDDUPUDI LAKSHMIGAYATHRI
2018-19	Electronics and Communication Engineering	EETHAKOTA SAIKRISHNA
2018-19	Electronics and Communication Engineering	GORRELA GOPI CHAND
2018-19	Electronics and Communication Engineering	DANDIPATI AYYAPPA
2018-19	Electronics and Communication Engineering	ALLANKI RAVISANKAR
2018-19	Electronics and Communication Engineering	CHENNAM NAGENDRA VARMA
2018-19	Electronics and Communication Engineering	JAMPA PAUL NISHIT RAJ

2018-19	Electronics and Communication Engineering	CHITYALA A NAGA DURGA
2018-19	Electronics and Communication Engineering	BATTA KOMALI
2018-19	Electronics and Communication Engineering	ANUPOJU SRI DIVYA
2018-19	Electronics and Communication Engineering	DEVABARIKINA JEEVAN RAJ
2018-19	Electronics and Communication Engineering	JAGADESHWAR VINAY VEERA
2018-19	Electronics and Communication Engineering	BANDARU MOHANA DIVYA
2018-19	Electronics and Communication Engineering	CHALAMALASETTI ARAVINDA SAI
2018-19	Electronics and Communication Engineering	GORLA CHANUKYA
2018-19	Electronics and Communication Engineering	GEDDAM SIRI CHANDANA
2018-19	Electronics and Communication Engineering	INDANA KEERTHI
2018-19	Electronics and Communication Engineering	BODDU MUKULLA SANTHOSHI
2018-19	Electronics and Communication Engineering	ALIMILLI LAKSHMI BHARGAVI
2018-19	Electronics and Communication Engineering	CHAGANTI SUSHYAM
2018-19	Electronics and Communication Engineering	GUDLA SAI MAHESWAR
2018-19	Electronics and Communication Engineering	DODDI PRUDHVI RAJ
2018-19	Electronics and Communication Engineering	BURLA BHARGAV
2018-19	Electronics and Communication Engineering	AGARTHI KRISHNASARANYA
2018-19	Electronics and Communication Engineering	AKULAYASWANTH KUMAR
2018-19	Electronics and Communication Engineering	CHINTALA TEJA
2018-19	Electronics and Communication Engineering	GARAGA SRUJANI DEVI
2018-19	Electronics and Communication Engineering	JAMPANI SAI TEJA
2018-19	Electronics and Communication Engineering	BOLLIMUNTHA RAMAKRISHNA

2018-19	Electronics and Communication Engineering	BATTULA YUGANDHAR
2018-19	Electronics and Communication Engineering	GHANTA HEMA
2018-19	Electronics and Communication Engineering	KOTIPALLI LAKSHMIKALA
2018-19	Electronics and Communication Engineering	KOMMU HEPSIBHA JANE
2018-19	Electronics and Communication Engineering	KILADI TULASI NAGA VALLI
2018-19	Electronics and Communication Engineering	MORLA PURNACHAND
2018-19	Electronics and Communication Engineering	KATI SWAROOP
2018-19	Electronics and Communication Engineering	MANDAVA GAYATHRI
2018-19	Electronics and Communication Engineering	NULU GAYATHRI
2018-19	Electronics and Communication Engineering	PALLELA VASANTHA LAKSHMI
2018-19	Electronics and Communication Engineering	CHINTAMANENI SAI KIRAN
2018-19	Electronics and Communication Engineering	KOLLURU KUSUMA
2018-19	Electronics and Communication Engineering	NARASUPALLI PRASANTHI
2018-19	Electronics and Communication Engineering	KOPPULA UJWAL SAI KUMAR
2018-19	Electronics and Communication Engineering	KUNNA VISWANATH
2018-19	Electronics and Communication Engineering	MULAGALA PRAVEEN
2018-19	Electronics and Communication Engineering	KANDULA RUPA TEJASWI
2018-19	Electronics and Communication Engineering	KANIKICHERLA LIKHITA
2018-19	Electronics and Communication Engineering	NUVVULA KRISHNA BHARGAV
2018-19	Electronics and Communication Engineering	NANGULURI AVINASH
2018-19	Electronics and Communication Engineering	MERUGU NAVYASRI
2018-19	Electronics and Communication Engineering	KAMIREDDY RAJESH

2018-19	Electronics and Communication Engineering	MAYIRIAJAY
2018-19	Electronics and Communication Engineering	PALLAGANIKEERTHANA
2018-19	Electronics and Communication Engineering	MARADANI LAVANYA SRIDEVI
2018-19	Electronics and Communication Engineering	NAKKA ASRITHA
2018-19	Electronics and Communication Engineering	KAMIREDDY PATTABHI RAMAIAH
2018-19	Electronics and Communication Engineering	KARANAM VINEELA
2018-19	Electronics and Communication Engineering	NEKKALAPU GOPICHAND
2018-19	Electronics and Communication Engineering	MEKALA DORABABU
2018-19	Electronics and Communication Engineering	KONAKALAGIRIDHAR
2018-19	Electronics and Communication Engineering	KATRU LAKSHMI ANUSHA
2018-19	Electronics and Communication Engineering	MARAGANIBHARATHI
2018-19	Electronics and Communication Engineering	MADANA BHARATH
2018-19	Electronics and Communication Engineering	NITTA DHARMENDRA
2018-19	Electronics and Communication Engineering	MORLA MOUNIKA
2018-19	Electronics and Communication Engineering	MUVVALA TANUJ NAGENDRA PA VAN
2018-19	Electronics and Communication Engineering	KOPPULA JYOTSNA
2018-19	Electronics and Communication Engineering	KARANAM NAGAVENKATA LAKSHMI SAIRAJSEK
2018-19	Electronics and Communication Engineering	JUPUDI KAMALA PRIYA
2018-19	Electronics and Communication Engineering	MARADANI BOSE BABU
2018-19	Electronics and Communication Engineering	K M N V RAJ KUMAR
2018-19	Electronics and Communication Engineering	KALLEPALLI KIRAN
2018-19	Electronics and Communication Engineering	PAKALAPATI MANEESHA

2018-19	Electronics and Communication Engineering	KONNE SPANDANA
2018-19	Electronics and Communication Engineering	NAGANABOYINA PUSHPA LATHA
2018-19	Electronics and Communication Engineering	PALNATI SIRISHA
2018-19	Electronics and Communication Engineering	MAHMED SALMABAJID
2018-19	Electronics and Communication Engineering	NEELAMSETTI LAKSHMI PRAVALLIKA
2018-19	Electronics and Communication Engineering	MOHAMMED MEENAZ
2018-19	Electronics and Communication Engineering	KOLLETI VENKATA DURGA PRASAD
2018-19	Electronics and Communication Engineering	KOLUKULURICHINNARI
2018-19	Electronics and Communication Engineering	MAADANA SURESH KUMAR
2018-19	Electronics and Communication Engineering	MEDIKONDA SWATHI
2018-19	Electronics and Communication Engineering	KAVALAKUNTLA PREETHI MRUDULA
2018-19	Electronics and Communication Engineering	PALAPARTHI JHANSI
2018-19	Electronics and Communication Engineering	MOKKAPATI HARSHANATH
2018-19	Electronics and Communication Engineering	KOTIPALLI SRI RAMACHANDRA
2018-19	Electronics and Communication Engineering	KOLLI SASIKALA
2018-19	Electronics and Communication Engineering	LANKALAPALLI BHAVANI
2018-19	Electronics and Communication Engineering	KOPPULAVURI CHAITANYA KRISHNA SAI
2018-19	Electronics and Communication Engineering	SWARNA NAGA UMA SUSMITHA
2018-19	Electronics and Communication Engineering	YADLAPALLI SAMBASIVA RAO
2018-19	Electronics and Communication Engineering	THOTA SAIKUMAR
2018-19	Electronics and Communication Engineering	VADLAPUDI LATISH
2018-19	Electronics and Communication Engineering	SANDIPAM PREMCHAND

2018-19	Electronics and Communication Engineering	THOTA SAI DIVYA
2018-19	Electronics and Communication Engineering	PEDDIBOINA GOWTHAMI
2018-19	Electronics and Communication Engineering	SAINITISH EDUPUGANTI
2018-19	Electronics and Communication Engineering	PONANGI V S V VISHU VARDHAN
2018-19	Electronics and Communication Engineering	RALLABANDI SASHANK
2018-19	Electronics and Communication Engineering	SOMALA JYOTHI
2018-19	Electronics and Communication Engineering	VADLAMUDI RAMYA MANI
2018-19	Electronics and Communication Engineering	RAVANAM LAVANYA
2018-19	Electronics and Communication Engineering	SHEIKAMEER
2018-19	Electronics and Communication Engineering	PENMATSA PRAVEEN VARMA
2018-19	Electronics and Communication Engineering	SETTIPETA SANDHYA SRI
2018-19	Electronics and Communication Engineering	VELUPUKONDA RATNACHARI
2018-19	Electronics and Communication Engineering	PAREPALLI ANIL KUMAR
2018-19	Electronics and Communication Engineering	TADEPALLI NAGALAKSHMI SRI JAHNAVI
2018-19	Electronics and Communication Engineering	SATHI MEGHANA
2018-19	Electronics and Communication Engineering	PILLA NAGADURGAPRASAD
2018-19	Electronics and Communication Engineering	PUTTI SRI RAMA MURTHY
2018-19	Electronics and Communication Engineering	TAMMINA BHAVANI
2018-19	Electronics and Communication Engineering	TUMMALA SAI DEEPTHI
2018-19	Electronics and Communication Engineering	SHAIKNAWAB SULTAN
2018-19	Electronics and Communication Engineering	PANDI CHINTAYYA
2018-19	Electronics and Communication Engineering	PINNAMANENI BABY CHANDINI DEVI

2018-19	Electronics and Communication Engineering	SHAIK SAYYAD
2018-19	Electronics and Communication Engineering	SADHU SAI DHANUSH
2018-19	Electronics and Communication Engineering	VURAKARANAM VENKATA ABHISHEK
2018-19	Electronics and Communication Engineering	SHAIKNAZIA
2018-19	Electronics and Communication Engineering	PUTTI TIRUMALA VENKATA SAI
2018-19	Electronics and Communication Engineering	YALAMANCHI PRAVEEN KUMAR
2018-19	Electronics and Communication Engineering	PUTTEPU POSI SUBRAHMANYAM
2018-19	Electronics and Communication Engineering	SYED NAZEER
2018-19	Electronics and Communication Engineering	PAMIREDDY SUSANTHI
2018-19	Electronics and Communication Engineering	SANGIREDDY RAJESHKUMAR
2018-19	Electronics and Communication Engineering	RAYAVARAPU DURGA VARA PRASAD
2018-19	Electronics and Communication Engineering	TAMMISETTY KINNERA
2018-19	Electronics and Communication Engineering	SHAIKNAZIA
2018-19	Electronics and Communication Engineering	TEJASWI UNDAVALL
2018-19	Electronics and Communication Engineering	PUTTI SUMA
2018-19	Electronics and Communication Engineering	VELIVENTI SAI TEJASWINI
2018-19	Electronics and Communication Engineering	RAJULAPATI SNIGDHA SREE
2018-19	Electronics and Communication Engineering	SRAVANI VEMULAPALLI
2018-19	Electronics and Communication Engineering	PARASA SRI PUJITHA
2018-19	Electronics and Communication Engineering	RAJABOINA NAGALAKSHMANA RAO
2018-19	Electronics and Communication Engineering	PARVATHANENI DEEKSHIT KRISHNA RAO
2018-19	Electronics and Communication Engineering	PURRI SRAVANA SAI KUMAR

2018-19	Electronics and Communication Engineering	YENIGALLA DHANALAKSHMI
2018-19	Electronics and Communication Engineering	BADETI JAYA SRI ANJANA
2018-19	Electronics and Communication Engineering	TATINA NAVYA
2018-19	Electronics and Communication Engineering	RELANGI VENKATA NAGA TEJASWINI
2018-19	Electronics and Communication Engineering	YERROJU KAMAKSHI
2018-19	Electronics and Communication Engineering	THOTA ARUN SHOWRY
2018-19	Electronics and Communication Engineering	POGIRI KIRANMAI
2018-19	Electronics and Communication Engineering	YANGLASETTI DHANA LAKSHMI
2018-19	Electronics and Communication Engineering	UKKUSURI DIVYA SREE
2018-19	Electronics and Communication Engineering	PISSEY PAVAN SAI
2018-19	Electronics and Communication Engineering	VALLURU MEGHANA
2018-19	Electronics and Communication Engineering	UKKUSURI MOUNIKA NAGA SIRISHA
2018-19	Electronics and Communication Engineering	PATHURI SRI VENKAT
2018-19	Electronics and Communication Engineering	VALLEPU TEJASWI
2018-19	Electronics and Communication Engineering	VADAVALLI BHASKARA VENKATA SAI RAM
2018-19	Computer Science and Engineering	PAMPANA LAKSHMI NANDINI
2018-19	Computer Science and Engineering	BONTU SAI SATYA AJAY
2018-19	Computer Science and Engineering	ANANTHABHOTLA SAI SUDHAKAR
2018-19	Computer Science and Engineering	KODALI SAI KIRAN
2018-19	Computer Science and Engineering	DANDU SOWJANYA
2018-19	Computer Science and Engineering	KONDURU VAISHNAVI
2018-19	Computer Science and Engineering	GORU DEEPTHI

2018-19	Computer Science and Engineering	ANKAM POOJA
2018-19	Computer Science and Engineering	ACHUTHA UDAY PAVAN
2018-19	Computer Science and Engineering	HEMALATHA ALLURI
2018-19	Computer Science and Engineering	AKKINENI SAI MOUNISHA
2018-19	Computer Science and Engineering	KOTHA SUDHEER
2018-19	Computer Science and Engineering	BEZAWADA SWETHA SAI
2018-19	Computer Science and Engineering	GANTASALA SOUNDHARYA
2018-19	Computer Science and Engineering	GADI YUVA KRISHNA SAI
2018-19	Computer Science and Engineering	KALAPALA MANISHA PRIYA
2018-19	Computer Science and Engineering	JUTTUKA HARI KRISHANA
2018-19	Computer Science and Engineering	KUCHI SUCHITRA
2018-19	Computer Science and Engineering	HARISH KUMAR MUMMADI
2018-19	Computer Science and Engineering	EADE SRI HARI
2018-19	Computer Science and Engineering	ILLURI MALLA REDDY
2018-19	Computer Science and Engineering	KAKARAPARTHI VIJAY
2018-19	Computer Science and Engineering	GANIPINENI VENKATARAO
2018-19	Computer Science and Engineering	DANDA CHRISTOPHER
2018-19	Computer Science and Engineering	KOTHAPALLI SESHA SRI SANDHYA
2018-19	Computer Science and Engineering	BOMMI S E C VISWESWARA SAI
2018-19	Computer Science and Engineering	ANKIT KUMAR RAI
2018-19	Computer Science and Engineering	BHEEMUNI SAI SUMANTH
2018-19	Computer Science and Engineering	JANGALA RAGHA SRI HARSHITHA

2018-19	Computer Science and Engineering	BHOSETTI LEELA VARA PRASAD
2018-19	Computer Science and Engineering	JONNALAGADDA SREEPRADA
2018-19	Computer Science and Engineering	JALAPARTHI JIVANA SANDHYA DEVI
2018-19	Computer Science and Engineering	JOJAPU PAVAN KUMAR
2018-19	Computer Science and Engineering	KAVALA LOHITA NAGA VALLY PRIYA
2018-19	Computer Science and Engineering	JAKKULA DEVI SINDHURA
2018-19	Computer Science and Engineering	KORAM SUNIL KUMAR
2018-19	Computer Science and Engineering	GANTA CHANDRIKA
2018-19	Computer Science and Engineering	GUTTIKONDA SRIDEVI
2018-19	Computer Science and Engineering	AMBATI RUSHI
2018-19	Computer Science and Engineering	KAMATHAM RAMYA
2018-19	Computer Science and Engineering	INAGADAPA NAVYA SRI LAKSHMI
2018-19	Computer Science and Engineering	DONTAMSETTY NIHITHA
2018-19	Computer Science and Engineering	ANDRA VARDHINI DURGA
2018-19	Computer Science and Engineering	JAGABATHULA NIKITHA
2018-19	Computer Science and Engineering	CHINAKOTLA PAVANI
2018-19	Computer Science and Engineering	CHINNAM BINDU PRIYANKA
2018-19	Computer Science and Engineering	ANDRA YUVA DURGA MOUNICA
2018-19	Computer Science and Engineering	CHINTAPATLA RAJESH
2018-19	Computer Science and Engineering	AYYAGARI SAI JYOTHI
2018-19	Computer Science and Engineering	CHALLA AYYAPPA
2018-19	Computer Science and Engineering	GARIMELLA MEGHA SREE

2018-19	Computer Science and Engineering	V S S SARATH KUMAR REDDY
2018-19	Computer Science and Engineering	A TRINADH V SAI CHOWDARY
2018-19	Computer Science and Engineering	K SANDEEP SAI KUMAR
2018-19	Computer Science and Engineering	J N VENKATA SAI RISHITHA
2018-19	Computer Science and Engineering	KONDAPANENI VAMSI KRISHNA
2018-19	Computer Science and Engineering	A Sravya
2018-19	Computer Science and Engineering	J Revathi
2018-19	Computer Science and Engineering	A Anitha
2018-19	Computer Science and Engineering	K Sai Pavani
2018 - 19	Computer Science and Engineering	ADAPA MOUNIKA
2018 - 19	Master of Business Administration	ANDRA DIVYA VANI
2018 - 19	Master of Business Administration	ANNAVARAPU NAGA SUMA SRI
2018 - 19	Master of Business Administration	ANNAVARAPU SAI RAM
2018 - 19	Master of Business Administration	BEVARA NARAYANA RAO
2018 - 19	Master of Business Administration	BHOGI SATEESH
2018 - 19	Master of Business Administration	BOOSI YAMINI VENKATA LAKSHMI
2018 - 19	Master of Business Administration	MOVVA SAI PRUDHVI
2018 - 19	Master of Business Administration	BUGATHA RAJESWARI
2018 - 19	Master of Business Administration	BUSE PAVAN KALYAN
2018 - 19	Master of Business Administration	CHAMALLAMUDI NAVEEN
2018 - 19	Master of Business Administration	GUMMALLA D V SIVA SATYANARAYANA RAJU
2018 - 19	Master of Business Administration	GUNJE VENKATA RAMANA

2018 - 19	Master of Business Administration	VAVILAPALLI MAHESH
2018 - 19	Master of Business Administration	VEMULA HARIKA
2018 - 19	Master of Business Administration	VEMA SAI RAMACHANDRA VINEETH KUMAR
2018 - 19	Master of Business Administration	CHILLA RATNA KUMAR
2018 - 19	Master of Business Administration	CHINAKOTLA HARITHA
2018 - 19	Master of Business Administration	CHINNALA VEERRAJU
2018 - 19	Master of Business Administration	DADI SANDHAYA RANI
2018 - 19	Master of Business Administration	DONDAPATI NAGA RAJU
2018 - 19	Master of Business Administration	GANDHAM TULASI KRISHNA
2018 - 19	Master of Business Administration	GOLLU SATISH KUMAR
2018 - 19	Master of Business Administration	GORRELA MOUNIKA
2018 - 19	Master of Business Administration	GOTTAPU MADHU RAGINI
2018 - 19	Master of Business Administration	GUDISE HADASSA
2018 - 19	Master of Business Administration	ILLA MANI ANJANEYA
2018 - 19	Master of Business Administration	IMRAN SHAIK
2018 - 19	Master of Business Administration	VIMALADEVI BONU
2018 - 19	Master of Business Administration	VURIVI NALINI
2018 - 19	Master of Business Administration	GONNURU SUPRIYA REDDY
2018 - 19	Master of Business Administration	KATTA VEERA BABU
2018 - 19	Master of Business Administration	KASINA GANESH
2018 - 19	Master of Business Administration	KONAGALLA KAMAKSHI SWETHA
2018 - 19	Master of Business Administration	KONAKALLA JHANSILAKSHMI

2018 - 19	Master of Business Administration	KONDA SNEHA
2018 - 19	Master of Business Administration	KONERU DEVENDRA NADH CHOWDARY
2018 - 19	Master of Business Administration	KONKIMALLA RAVI TEJA
2018 - 19	Master of Business Administration	KOTHA CHANDANA SRI VYSHNAVI
2018 - 19	Master of Business Administration	KUCHIPUDI RAMGOPAL
2018 - 19	Master of Business Administration	KUMMARI BHAGYA RAJU
2018 - 19	Master of Business Administration	KUNUKU SUNEETA
2018 - 19	Master of Business Administration	JONNADA JYOSTNA AMBICA
2018 - 19	Master of Business Administration	YADLAPALLI PRIYANKA
2018 - 19	Master of Business Administration	YAJJUVARAPU SRI LAKSHMI
2018 - 19	Master of Business Administration	LOKALA PRASANTHI
2018 - 19	Master of Business Administration	M ROHITH SAI
2018 - 19	Master of Business Administration	MADALA SAI VARSHINI
2018 - 19	Master of Business Administration	MAMIDIPALLI JAGADEESH
2018 - 19	Master of Business Administration	MANDAVA PHANI TEJA
2018 - 19	Master of Business Administration	MANDELA SRI LAKSHMI SRUJANA
2018 - 19	Master of Business Administration	MARISETTI JAGADEESH
2018 - 19	Master of Business Administration	MERUGU RAMYASAI
2018 - 19	Master of Business Administration	MOHAMMAD AZIZUNNISA
2018 - 19	Master of Business Administration	MOHAMMAD RAZIA SULTANA
2018 - 19	Master of Business Administration	JORIGE PRABHAGNA
2018 - 19	Master of Business Administration	YARAKALA Jy NAGA SAI BHARAT KUMAR

2018 - 19	Master of Business Administration	YARRAMSETTI SAI RAM PRASAD
2018 - 19	Master of Business Administration	MORAMPUDI CHANDANA KUMAR
2018 - 19	Master of Business Administration	Mula. Ramireddy
2018 - 19	Master of Business Administration	MUNDURI VEERA VENKATA SIVADURGA SAIRAM
2018 - 19	Master of Business Administration	MURUGULA HEMANTH VENKATESH
2018 - 19	Master of Business Administration	N.M.D.L. BHAVANI
2018 - 19	Master of Business Administration	NALLA MANOHAR
2018 - 19	Master of Business Administration	NARAVULA NUSHNA VENKATA KATYAYANI
2018 - 19	Master of Business Administration	NARVA MOHAN SAI KUMAR
2018 - 19	Master of Business Administration	PAKALA NAGA RATNA PRASUNA
2018 - 19	Master of Business Administration	PAKIRAM PAVAN KALYAN
2018 - 19	Master of Business Administration	PALA JAYANTH SAI KISHORE
2018 - 19	Master of Business Administration	PALA KUMARA SWAMY
2018 - 19	Master of Business Administration	YENUGA BHARGAVI
2018 - 19	Master of Business Administration	KAKUMANI LAVANYA
2018 - 19	Master of Business Administration	PALLEBOYINA PAVANI
2018 - 19	Master of Business Administration	PALLELA SAI MOUNIKA
2018 - 19	Master of Business Administration	PAMPANA LAKSHMI NANDINI
2018 - 19	Master of Business Administration	PAPPU DEVI SWETHA
2018 - 19	Master of Business Administration	PASAM HARANADH
2018 - 19	Master of Business Administration	PATURI SAGAR
2018 - 19	Master of Business Administration	PINNINTI SWETHA PRIYA VANDANA

2018 - 19	Master of Business Administration	PRUDHVIRAJU NALLA
2018 - 19	Master of Business Administration	PUDI HEMA
2018 - 19	Master of Business Administration	PUJARI KRANTHI KUMAR
2018 - 19	Master of Business Administration	KALAKOTA SUMANTH
2018 - 19	Master of Business Administration	KALLEM JASHUA DANIEL
2018 - 19	Master of Business Administration	SAMMITA VENKATA NAGA SESHU KUMAR
2018 - 19	Master of Business Administration	DARA LIZIA
2018 - 19	Master of Business Administration	RAGA SATHYA DEEPIKA KANIKANTI
2018 - 19	Master of Business Administration	RAJULAPATI JYOTHI
2018 - 19	Master of Business Administration	SABBISETTY RUPESH BABU
2018 - 19	Master of Business Administration	SAPPA JUHI LAVANYA
2018 - 19	Master of Business Administration	SAYANI RAJESH DANI
2018 - 19	Master of Business Administration	SEELAM SOWJANYA
2018 - 19	Master of Business Administration	SHAIK ISMAIL
2018 - 19	Master of Business Administration	SHAIK SAIRABANU
2018 - 19	Master of Business Administration	SHAIK SAKHEENA BIBI
2018 - 19	Master of Business Administration	SHAIK SHARMILA BEGUM
2018 - 19	Master of Business Administration	KANDIKATTU MAHALAKSHMI PADMAVATHI
2018 - 19	Master of Business Administration	CHOPPAVARAPU SIRISHA
2018 - 19	Master of Business Administration	SURINENI MANISHA
2018 - 19	Master of Business Administration	TADEPALLI VENKATA MAHANTHY
2018 - 19	Master of Business Administration	TATAVARTHI SAI BRAHMENDRA

2018 - 19	Master of Business Administration	THOTA ARAVIND
2018 - 19	Master of Business Administration	THOTA MANEESHA
2018 - 19	Master of Business Administration	TUNUGUNTLA RUPENDRA
2018 - 19	Master of Business Administration	VARA SHANTHI PRIYA
2018 - 19	Master of Business Administration	B.V.V.NAGARAJU
2018 - 19	Master of Business Administration	VARRI KISHORE
2018 - 19	Master of Business Administration	VASAMSETTI RAJESH
2018 - 19	Master of Business Administration	KANDULA HARI BABU
2018 - 19	Master of Business Administration	KANURI RAMESH KUMAR
2018 - 19	Master of Business Administration	KARAPA SAILAJA
2018 - 19	Master of Business Administration	NALLURI SWATHI
2017-18		
2017-18	Civil Engineering	ALIMILLI CHARAN TEJA
2017-18	Civil Engineering	ANGADALA NAGESWARA RAO
2017-18	Civil Engineering	ARAVALLI NARESH
2017-18	Civil Engineering	ARJI SREE DURGA
2017-18	Civil Engineering	BODAPATI AJITH
2017-18	Civil Engineering	BODDAPU PRASANNA KUMAR
2017-18	Civil Engineering	BODDU VASU
2017-18	Civil Engineering	CHAMATA RENUKA CHOWDARY
2017-18	Civil Engineering	CHAVALAM TARUN SAI ARAVIND
2017-18	Civil Engineering	CHINTALA PAVAN KALYAN
2017-18	Civil Engineering	CHINTAMANENI KALYAN
2017-18	Civil Engineering	DAVULURI SAI KIRAN
2017-18	Civil Engineering	DOPPASANI THARAKA DEVI VARA PRASAD
2017-18	Civil Engineering	GODI SAMUEL DIVYA SUNDAR
2017-18	Civil Engineering	GOLLA LALEEN KUMAR
2017-18	Civil Engineering	GUNTAMUKKALA MADHURI
2017-18	Civil Engineering	KARAMSETTY VENKATA SATYANARAYANA
2017-18	Civil Engineering	KAREDLA LAKSHMI MADHURI
2017-18	Civil Engineering	KOMMA RAJANI
2017-18	Civil Engineering	KONDA SAROJA
2017-18	Civil Engineering	KUNJA SUNDEEP KUMAR

2017-18	Civil Engineering	LANGU NAVEEN KUMAR BABA
2017-18	Civil Engineering	LANKA SRI SIVA MANIKANTA
2017-18	Civil Engineering	LANKA SRIKANTH
2017-18	Civil Engineering	MAMIDI VAMSIKRISHNA
2017-18	Civil Engineering	MODINA ANANDHSAIGANGADHAR
2017-18	Civil Engineering	MUMMAREDDY NAGAJYOTHI
2017-18	Civil Engineering	NALLA RAVI VARMA
2017-18	Civil Engineering	NAVUDURI DURGA VARA PRASAD
2017-18	Civil Engineering	PAMARTHI NANI SURENDRA BABU
2017-18	Civil Engineering	P VEERA VENKATA NAGA VARAPRASAD
2017-18	Civil Engineering	PAMU TEJA
2017-18	Civil Engineering	PATURI ESWARAVARAPRASAD
2017-18	Civil Engineering	PEDASANAGANTI PRASANTH KUMAR
2017-18	Civil Engineering	RAJA PAVAN KUMAR MUDHILI
2017-18	Civil Engineering	REVANTH PASUPULETI
2017-18	Civil Engineering	SARIHADDU SRAVAN NILISH
2017-18	Civil Engineering	SHAIK RAHEL
2017-18	Civil Engineering	TAMPARA ANJALI CHANDRAVATHI
2017-18	Civil Engineering	TENTU RAM KALYAN KUMAR
2017-18	Civil Engineering	THAMMISETTY HARIKA
2017-18	Civil Engineering	THENTU SHYAM KUMAR
2017-18	Civil Engineering	THORATI PADMA PRIYA
2017-18	Civil Engineering	THOTA DANI JAPHERSON
2017-18	Civil Engineering	TIPPARAPALLI ROHITH
2017-18	Civil Engineering	VADDANAPU VAMSI KRISHNA
2017-18	Civil Engineering	VEDURUPARTHI VENKATESH
2017-18	Civil Engineering	VEERANKI LATHA SRI
2017-18	Civil Engineering	VELIVALA VAMSI KRISHNA
2017-18	Civil Engineering	YALAMARTHY VAMSI KUMAR
2017-18	Civil Engineering	BADITHA VENKATA VEERABABU
2017-18	Civil Engineering	BANDUCHODE HEMANTH KUMAR
2017-18	Civil Engineering	DUMPA RAJASEKHARAREDDY
2017-18	Civil Engineering	KODAVALI KIRAN
2017-18	Civil Engineering	KONDAPATURI RAJA SEKHAR
2017-18	Civil Engineering	KOTA SAI GOPINADH
2017-18	Civil Engineering	KUNCHAKARLA PRAVEEN KUMAR
2017-18	Civil Engineering	MAHESH GRANDHI
2017-18	Civil Engineering	MODAGANI DURGA PARASAD
2017-18	Civil Engineering	NARIPATI SOWMYA
2017-18	Civil Engineering	NAVANEETH THOTA
2017-18	Civil Engineering	SIRRA SIVANAGARAJU
2017-18	Civil Engineering	SRAVANAM PAVAN KUMAR
2017-18	Civil Engineering	TAANAARI GANGADHAR
2017-18	Civil Engineering	THADEPU YESU KUMAR

2017-18	Civil Engineering	VEERAVALLI GANESH SURENDRA BABU
2017-18	Civil Engineering	JAYAMANGALA VAMSI KRISHNA
2017-18	Electrical and Electronics Enineering	ALLADA NAVYASWAROOPA
2017-18	Electrical and Electronics Enineering	ANDARAPU PADMAJA
2017-18	Electrical and Electronics Enineering	APPALA SRAVANI
2017-18	Electrical and Electronics Enineering	BAGGU YOJANA SANDRA
2017-18	Electrical and Electronics Enineering	BETHAVOLU V S S S R KARTHIK
2017-18	Electrical and Electronics Enineering	BHIMADOLE GAGAN TEJA
2017-18	Electrical and Electronics Enineering	BHUMA HEMA VENKATA KAVYA
2017-18	Electrical and Electronics Enineering	BOMMISETTI MOUNICA
2017-18	Electrical and Electronics Enineering	BONGU JASWANTH SIVA SATISH KUM
2017-18	Electrical and Electronics Enineering	BONTHU OOHA SWETHA
2017-18	Electrical and Electronics Enineering	CHOPPALA SWAPNIKA
2017-18	Electrical and Electronics Enineering	DEVARAPU MERCY APARANJAM
2017-18	Electrical and Electronics Enineering	DOKALA BHAVYA PRANATHI
2017-18	Electrical and Electronics Enineering	DOOSANAPUDI RAVALI
2017-18	Electrical and Electronics Enineering	EEDPUGANTI RAJA
2017-18	Electrical and Electronics Enineering	ETHAKOTA LOHIT VENKATA JAYA SA
2017-18	Electrical and Electronics Enineering	GANAPATHINEEDI RAVITEJA
2017-18	Electrical and Electronics Enineering	GANJI MANICHANDU
2017-18	Electrical and Electronics Enineering	GUDA CHANDRAKALA
2017-18	Electrical and Electronics Enineering	JANGAM PRAYERSON
2017-18	Electrical and Electronics Enineering	KOMMANA VINESH

2017-18	Electrical and Electronics Enineering	KALIDINDI CHARISHMA
2017-18	Electrical and Electronics Enineering	KARRI VENKATA SAIKUMAR
2017-18	Electrical and Electronics Enineering	KARUNA KATURI
2017-18	Electrical and Electronics Enineering	KATREDDI HARSHITHA
2017-18	Electrical and Electronics Enineering	KATREDDY RAMYA DEEPIKA
2017-18	Electrical and Electronics Enineering	KIRAN KUMAR GANTA
2017-18	Electrical and Electronics Enineering	KOMMANA RAHINI
2017-18	Electrical and Electronics Enineering	KOMMIREDDY BALASUBRAHMANYAM
2017-18	Electrical and Electronics Enineering	KOMMIREDDY SURIBABU
2017-18	Electrical and Electronics Enineering	KONERU DEVENDRA NADH CHOWDARY
2017-18	Electrical and Electronics Enineering	KORIPALLI SESHU ANIL KUMAR
2017-18	Electrical and Electronics Enineering	KOSIREDDI DHANALAKSHMI
2017-18	Electrical and Electronics Enineering	KUNUKU NAGA SIMHA TEJA
2017-18	Electrical and Electronics Enineering	LAKKOJU MANASA KUMAR
2017-18	Electrical and Electronics Enineering	MALLEMPALLI DEEPIKA
2017-18	Electrical and Electronics Enineering	MARADANA HARIKA
2017-18	Electrical and Electronics Enineering	MAYIRI BALA MANIKANTA
2017-18	Electrical and Electronics Enineering	MEDISETTY N V SATYA MANIKUMAR
2017-18	Electrical and Electronics Enineering	MUNGARA ABRAHAM
2017-18	Electrical and Electronics Enineering	MUNTHA VENKATA SAI MADHURIMA
2017-18	Electrical and Electronics Enineering	MURARI VENKATA SAI BHUVANA JYO
2017-18	Electrical and Electronics Enineering	NAGA PRAVEEN

2017-18	Electrical and Electronics Enineering	CHINCHINADA NIVEDITA
2017-18	Electrical and Electronics Enineering	P MOUNIKA
2017-18	Electrical and Electronics Enineering	PALLISETTI SAI KUMAR
2017-18	Electrical and Electronics Enineering	PAMIREDDY PHANI VIKAS REDDY
2017-18	Electrical and Electronics Enineering	PAMULAPATI SATISH KUMAR
2017-18	Electrical and Electronics Enineering	PANDULA SAMUEL SUNDAR PAUL
2017-18	Electrical and Electronics Enineering	PARIMI VENKATA RAVITEJA
2017-18	Electrical and Electronics Enineering	PARVATHANENI NEHA SRI
2017-18	Electrical and Electronics Enineering	PANTAM SOWNDARYA
2017-18	Electrical and Electronics Enineering	PILLA PEDDIRAJU
2017-18	Electrical and Electronics Enineering	PITTA RAJ KAMAL
2017-18	Electrical and Electronics Enineering	PUPPALA SOUNDARYA
2017-18	Electrical and Electronics Enineering	PORIPIREDDI SAIRAJESH
2017-18	Electrical and Electronics Enineering	PUDI JABILLI
2017-18	Electrical and Electronics Enineering	PURRI RUTHU
2017-18	Electrical and Electronics Enineering	RAYAVARAPU VEERA GANGADHAR
2017-18	Electrical and Electronics Enineering	SAKETI MOHAN GANESH
2017-18	Electrical and Electronics Enineering	SAPPATI MANOJ KUMAR
2017-18	Electrical and Electronics Enineering	SARIGE RAMYA
2017-18	Electrical and Electronics Enineering	SHAIK KHALEEL
2017-18	Electrical and Electronics Enineering	SHAIK KHAMRUDDIN
2017-18	Electrical and Electronics Enineering	SHAIK MYMUNA

2017-18	Electrical and Electronics Enineering	SIRIGU BATTULA JAYA BHARGAVI
2017-18	Electrical and Electronics Enineering	SIRIVISETTY DILEEP NAGA SARATH
2017-18	Electrical and Electronics Enineering	SIVALANKA SRIDHAR
2017-18	Electrical and Electronics Enineering	SOMISETTI PAVAN KUMAR
2017-18	Electrical and Electronics Enineering	SURYA TEJA PAKALAPATI
2017-18	Electrical and Electronics Enineering	TAPPITLA RINCY PRIYANKA
2017-18	Electrical and Electronics Enineering	TEJA SREE RAVI KUMAR KASA
2017-18	Electrical and Electronics Enineering	THAMMINENI KRISHNA MURTHY
2017-18	Electrical and Electronics Enineering	THAMMINENI SUNIL CHOWDARY
2017-18	Electrical and Electronics Enineering	THORLIKONDA ASHOKBABU
2017-18	Electrical and Electronics Enineering	TIRUNAGARI D S V RAJESH KRISHN
2017-18	Electrical and Electronics Enineering	VEERANKI RUPA NAGA RANGAMANI
2017-18	Electrical and Electronics Enineering	VEERLA LAKSHMI LAVANYA
2017-18	Electrical and Electronics Enineering	VEMULA MANIKANTA
2017-18	Electrical and Electronics Enineering	VEMULAPALLI HYNDHAVI
2017-18	Electrical and Electronics Enineering	VEMULAPUDI SAI SOWJANYA
2017-18	Electrical and Electronics Enineering	VIDYMSETTI NIKHITHASRI
2017-18	Electrical and Electronics Enineering	VYKUNTAPU DHANAMJAYA
2017-18	Electrical and Electronics Enineering	YATHIRAJAM LAVANYA
2017-18	Electrical and Electronics Enineering	CHAITANYA DEEP CHILAKALAPUDI
2017-18	Electrical and Electronics Enineering	DONGALA VENKATA HIMA KUMAR
2017-18	Electrical and Electronics Enineering	DOSAPATI INDUMATHI

2017-18	Electrical and Electronics Enineering	GOGINENI SAI KRISHNA
2017-18	Electrical and Electronics Enineering	GOTRU GRACE
2017-18	Electrical and Electronics Enineering	GURANA NAVEEN KUMAR
2017-18	Electrical and Electronics Enineering	INAKOTI RAVI
2017-18	Electrical and Electronics Enineering	JOGI RAMBABU
2017-18	Electrical and Electronics Enineering	K SUMANTH BABU
2017-18	Electrical and Electronics Enineering	KATTA NAGARAJU
2017-18	Electrical and Electronics Enineering	KORUKONDA BALARAMA KRISHNA
2017-18	Electrical and Electronics Enineering	KOTHAGORLA VENKATESH
2017-18	Electrical and Electronics Enineering	KUKKALA SURESH BABU
2017-18	Electrical and Electronics Enineering	MAJETI KRISHNA CHAITANYA
2017-18	Electrical and Electronics Enineering	MANTINA PAVANI
2017-18	Electrical and Electronics Enineering	MARADANI SAI KRISHNA
2017-18	Electrical and Electronics Enineering	MASIMUKKULA TULASI SRI MARUTHI
2017-18	Electrical and Electronics Enineering	NAGULLA NARENDRA
2017-18	Electrical and Electronics Enineering	PAPPALA SURESH
2017-18	Electrical and Electronics Enineering	POLAVARAPU HARUN NAGENDRA SAI
2017-18	Electrical and Electronics Enineering	SANKU ABHISHIKTH
2017-18	Electrical and Electronics Enineering	SHAIK SHABBER
2017-18	Electrical and Electronics Enineering	SIRIBATTINA CHANDRAKANTH
2017-18	Electrical and Electronics Enineering	SUDHA KRISHNA
2017-18	Electrical and Electronics Enineering	TALLURI SANDYA

2017-18	Electrical and Electronics Enineering	THOTA VENKATA KRISHNA TEJA
2017-18	Electrical and Electronics Enineering	VEERA YASWANT KUMAR
2017-18	Electrical and Electronics Enineering	VENNELA BHARGAVI
2017-18	Electrical and Electronics Enineering	YARROJU NAGENDRA BABU
2017-18	Electrical and Electronics Enineering	KONAKALLA SIVA RAJESH
2017-18	Electrical and Electronics Enineering	TALAM UMA MAHESWARA RAO
2017-18	MECHANICAL ENGINEERING	GOLLAPALLI DINESH
2017-18	MECHANICAL ENGINEERING	P RAGHAVA
2017-18	MECHANICAL ENGINEERING	RASAPUTRA KAILASH BHUSHAN
2017-18	MECHANICAL ENGINEERING	ABDUL SHAHID AFRID
2017-18	MECHANICAL ENGINEERING	AKULA AJAYKUMAR
2017-18	MECHANICAL ENGINEERING	ANUPOJU SAI RAM
2017-18	MECHANICAL ENGINEERING	ARABARIKI RAMANA
2017-18	MECHANICAL ENGINEERING	BANTU RAJESH BABU
2017-18	MECHANICAL ENGINEERING	BHIMASINGU RAMAKRISHNA
2017-18	MECHANICAL ENGINEERING	BHUMA NAVEEN KUMAR
2017-18	MECHANICAL ENGINEERING	CHAGANTI SANDEEP
2017-18	MECHANICAL ENGINEERING	CHALAMALA MANIDEEP
2017-18	MECHANICAL ENGINEERING	CHAVAKULA RAJASHEKAR
2017-18	MECHANICAL ENGINEERING	CHILAKA SAI MOHAN
2017-18	MECHANICAL ENGINEERING	CH S N V DURGA KRISHNA PRASANTH
2017-18	MECHANICAL ENGINEERING	CHITTURI SATYANARAYANA

2017-18	MECHANICAL ENGINEERING	DALADURI MURALI
2017-18	MECHANICAL ENGINEERING	DARA AMRUTH RAJ
2017-18	MECHANICAL ENGINEERING	DARUGA RAJA MANIKANTA
2017-18	MECHANICAL ENGINEERING	DEVARAPALLI BHASKARA VENKAT SAI
2017-18	MECHANICAL ENGINEERING	DIMMITI MANIKANTA
2017-18	MECHANICAL ENGINEERING	DOREPALLI NAGENDRA
2017-18	MECHANICAL ENGINEERING	EMANDI SAI RAMA CHANDRA SEKHAR
2017-18	MECHANICAL ENGINEERING	GATHALA SUDHA SAGAR
2017-18	MECHANICAL ENGINEERING	GHANTA SAI BHARATH
2017-18	MECHANICAL ENGINEERING	GUDAPATI NAGA HARISH
2017-18	MECHANICAL ENGINEERING	INDANA LALITH PAVAN KUMAR
2017-18	MECHANICAL ENGINEERING	JANGAM JACKSON
2017-18	MECHANICAL ENGINEERING	JANGAM SANDEEP
2017-18	MECHANICAL ENGINEERING	JOGINIDI PANDU RANGA RAO
2017-18	MECHANICAL ENGINEERING	KALI RAJANIKANTH
2017-18	MECHANICAL ENGINEERING	KALIDASU JAYA RAMA KRISHNA
2017-18	MECHANICAL ENGINEERING	KAMBHAM VENKATESH
2017-18	MECHANICAL ENGINEERING	KANAKAM MANIKANTA
2017-18	MECHANICAL ENGINEERING	KANNA VENKATA KRISHNA RAO
2017-18	MECHANICAL ENGINEERING	KARE ARUN SAGAR
2017-18	MECHANICAL ENGINEERING	KATHULA MARUTHI
2017-18	MECHANICAL ENGINEERING	KETHA PRANAY DURGA SAI KUMAR

2017-18	MECHANICAL ENGINEERING	KILARAPU SRINIVAS
2017-18	MECHANICAL ENGINEERING	LACHHIREDDY KISHORE BABU
2017-18	MECHANICAL ENGINEERING	MADDA PHANINDRA SAINADH
2017-18	MECHANICAL ENGINEERING	MAHADEVA RAVI
2017-18	MECHANICAL ENGINEERING	MARADANI HARI GOPAL
2017-18	MECHANICAL ENGINEERING	NAGULAPALLI SIVA SAI SRI DEEPAK
2017-18	MECHANICAL ENGINEERING	NATHA RAGHU
2017-18	MECHANICAL ENGINEERING	NELAPATI MALLIKARJUNA RAO
2017-18	MECHANICAL ENGINEERING	NUVVULA SRI RAM BALAJI
2017-18	MECHANICAL ENGINEERING	PALLA HEMANTH
2017-18	MECHANICAL ENGINEERING	PALLAPOTHU LAKSHMANA SAI
2017-18	MECHANICAL ENGINEERING	PANDI KARUN KUMAR
2017-18	MECHANICAL ENGINEERING	PARASA SIVAKRISHMA KUMAR
2017-18	MECHANICAL ENGINEERING	PATAN MOHIDDEEN NABI KHAN
2017-18	MECHANICAL ENGINEERING	PATAN NAGULMEERA KHAN
2017-18	MECHANICAL ENGINEERING	P MOSES SUGUNA NAVEEN KUMAR
2017-18	MECHANICAL ENGINEERING	PUJARI NAGA MADHUSUDHANA RAO
2017-18	MECHANICAL ENGINEERING	PUSARLA RAMA KANTH
2017-18	MECHANICAL ENGINEERING	PUSULURI G H S MALLIKARJUN
2017-18	MECHANICAL ENGINEERING	RALLAPALLI ESWAR
2017-18	MECHANICAL ENGINEERING	RAVULAPALLI PRAVEEN
2017-18	MECHANICAL ENGINEERING	REVALLA SURYA HARSHA VARDHAN

2017-18	MECHANICAL ENGINEERING	SAIDU MOHAN BABU
2017-18	MECHANICAL ENGINEERING	S JANAKI SURYA SAI NARENDRA
2017-18	MECHANICAL ENGINEERING	SANGOJULEELA SRIKANTHACHARYULU
2017-18	MECHANICAL ENGINEERING	SEELAM JOSEPH SUGUNA RAO
2017-18	MECHANICAL ENGINEERING	SHAIK REHMAN
2017-18	MECHANICAL ENGINEERING	SHAIK SHABBEER
2017-18	MECHANICAL ENGINEERING	SUNKARA BHARATH MANIKANTA
2017-18	MECHANICAL ENGINEERING	SUNNAPU VENKATESH
2017-18	MECHANICAL ENGINEERING	SURISETTI VISHNU SAI PADMA PRASAD
2017-18	MECHANICAL ENGINEERING	TAMMISETTI JAYA CHANDRA BABU
2017-18	MECHANICAL ENGINEERING	UNDI MANINDRA
2017-18	MECHANICAL ENGINEERING	UPPU N V S S PAVAN KUMAR
2017-18	MECHANICAL ENGINEERING	VADLAPATLA NAGA VENKATA HARISH
2017-18	MECHANICAL ENGINEERING	VAMISETTI BHANU PRAKASH
2017-18	MECHANICAL ENGINEERING	VEERNA SAI KUMAR
2017-18	MECHANICAL ENGINEERING	VOLETI PAVAN SAI
2017-18	MECHANICAL ENGINEERING	YADALA PREMRAJ
2017-18	MECHANICAL ENGINEERING	YALAVARTHI RANJITH KUMAR
2017-18	MECHANICAL ENGINEERING	YARRA HARI KRISHNA
2017-18	MECHANICAL ENGINEERING	YADLA CHAITANYA
2017-18	MECHANICAL ENGINEERING	ALURU KRISHNA SAI
2017-18	MECHANICAL ENGINEERING	ARIGELA RAJESHBABU

2017-18	MECHANICAL ENGINEERING	BATTINA NAGA RAJU
2017-18	MECHANICAL ENGINEERING	CHADARAM KRISHNA NAVEEN KUMAR
2017-18	MECHANICAL ENGINEERING	CHINNI RAMA GANGA BHAVANI
2017-18	MECHANICAL ENGINEERING	CHINTALAKRINDA NATHANIEL SANDEEP
2017-18	MECHANICAL ENGINEERING	DADIBATHINA SRIHARI
2017-18	MECHANICAL ENGINEERING	DOKKU VENKATA NAGA BABU
2017-18	MECHANICAL ENGINEERING	DOKUPARTHI SAI ARAVIND
2017-18	MECHANICAL ENGINEERING	GANDROTHULA HARISHKUMAR
2017-18	MECHANICAL ENGINEERING	GARIKIPATI NAGESWARA RAO
2017-18	MECHANICAL ENGINEERING	GEDELA JANAKI
2017-18	MECHANICAL ENGINEERING	GOWDRA KANAKA GIREESH KUMAR
2017-18	MECHANICAL ENGINEERING	KOLUKULURI VENKATESWARA RAO
2017-18	MECHANICAL ENGINEERING	KOLUSU GANESH BABU
2017-18	MECHANICAL ENGINEERING	KURAPATI VENKATA NAGENDRA VARMA
2017-18	MECHANICAL ENGINEERING	MAREEDU DHARMA SAI
2017-18	MECHANICAL ENGINEERING	NUKALA TAGOOR AJAY KUMAR
2017-18	MECHANICAL ENGINEERING	PAMULA SUNIL
2017-18	MECHANICAL ENGINEERING	PARUCHURI VARUN
2017-18	MECHANICAL ENGINEERING	PATAKAMURI MANIBABU
2017-18	MECHANICAL ENGINEERING	S A MOHAN GOUDA PADAMATA
2017-18	MECHANICAL ENGINEERING	SANNALA RAVI TEJA
2017-18	MECHANICAL ENGINEERING	SARAGADA CHINA RAJU

2017-18	MECHANICAL ENGINEERING	TELAPROLU SAI SURESH
2017-18	MECHANICAL ENGINEERING	THAMMALALA VENKATA RAGHU VAMSI
2017-18	MECHANICAL ENGINEERING	VASAADI NAGESWARA RAO
2017-18	MECHANICAL ENGINEERING	VUDATHA ANIL KUMAR
2017-18	MECHANICAL ENGINEERING	MD.AMZAD
2017-18	Computer Science and Engineering	KAABOTHULA JYOTHIRMAI
2017-18	Computer Science and Engineering	BHUPATHIRAJU GEETHA NAGA LAKSH
2017-18	Computer Science and Engineering	DEEPTHI DUKKIPATI
2017-18	Computer Science and Engineering	CHALLAGULLA NAGA VAHINI
2017-18	Computer Science and Engineering	AYYANKI SRI KRISHNA CHANDRA
2017-18	Computer Science and Engineering	KANIGALLA JYOTHIRMAI
2017-18	Computer Science and Engineering	GANGA SONY MUSUNURU
2017-18	Computer Science and Engineering	BONDA SRI HARSHA
2017-18	Computer Science and Engineering	MALLIPEDDI MOUNIKA
2017-18	Computer Science and Engineering	DINGIRI SREE SWATHI
2017-18	Computer Science and Engineering	GOGULAMANDA SPANDANA
2017-18	Computer Science and Engineering	DASIKA PAVAN KUMAR
2017-18	Computer Science and Engineering	BANDI PARIMALA
2017-18	Computer Science and Engineering	DEVARAPALLI JYOTHI
2017-18	Computer Science and Engineering	MEKA SAIAKSHITHA
2017-18	Computer Science and Engineering	BOPPANA GANESH
2017-18	Computer Science and Engineering	BORRA SATYA SAI VAMSI KRISHNA

2017-18	Computer Science and Engineering	BALE PARIMALA PUSHPA
2017-18	Computer Science and Engineering	KOSURI SANKAR
2017-18	Computer Science and Engineering	GUDIVAKA SAI VANI
2017-18	Computer Science and Engineering	SYAM KUMAR
2017-18	Computer Science and Engineering	ANUMOKONDA SAI SREEKANTH
2017-18	Computer Science and Engineering	KELLA HIRANMAYI
2017-18	Computer Science and Engineering	MANDAVA SOWMYA
2017-18	Computer Science and Engineering	GUMMIDI VENKATA MADHU VIKAS
2017-18	Computer Science and Engineering	MADIPALLI N V YASASWINI
2017-18	Computer Science and Engineering	LAKSHMI PRASANNA DAVULLURI
2017-18	Computer Science and Engineering	DIVYA YALLA
2017-18	Computer Science and Engineering	DATLA MOUNIKA
2017-18	Computer Science and Engineering	KALAPALA MOUNIKA
2017-18	Computer Science and Engineering	BUSIRAJU BALA BHARATHI
2017-18	Computer Science and Engineering	KAJA SHARIKA
2017-18	Computer Science and Engineering	JALLIPALLI PARIKSHITH
2017-18	Computer Science and Engineering	MARIDU PAVANI
2017-18	Computer Science and Engineering	MEDA ANJANEYA MANIKANTA BALASU
2017-18	Computer Science and Engineering	DONEPUDI ABHIRAM
2017-18	Computer Science and Engineering	BASAVA SANTOSH TUMATI
2017-18	Computer Science and Engineering	ARETI MANI SANDEEP
2017-18	Computer Science and Engineering	CHILAPAREDDI SAI DIVYA

2017-18	Computer Science and Engineering	KATEPALLI TESHU
2017-18	Computer Science and Engineering	KANDULA VENKATA PREM SRIHARSHA
2017-18	Computer Science and Engineering	CHALLAGOLLA DEEPIKA
2017-18	Computer Science and Engineering	KAMELLA AKHILA
2017-18	Computer Science and Engineering	GOGU ALEKHYA
2017-18	Computer Science and Engineering	KATIKALA VINOD KUMAR
2017 - 18	Computer Science and Engineering	ADABALA PRASANTH KUMAR
2017 - 18	Master of Business Administration	ALAPATI MOUNIKA RAJYA LAKSHMI
2017 - 18	Master of Business Administration	ALLA UMA MAHESWARI
2017 - 18	Master of Business Administration	ALLADI KALYANI
2017 - 18	Master of Business Administration	AMPASALA RAMA KRISHNA
2017 - 18	Master of Business Administration	PASUPULETI BALA DURGA SIMHACHALAM
2017 - 18	Master of Business Administration	ANGARA H D V LAKSHMI PRAVALLIKA
2017 - 18	Master of Business Administration	BALLA NIKHILA
2017 - 18	Master of Business Administration	BATCHU VINEESHA
2017 - 18	Master of Business Administration	BHARATHALA KUMARI
2017 - 18	Master of Business Administration	BODA SUNIL KUMAR
2017 - 18	Master of Business Administration	GULLAPALLI ADITYA
2017 - 18	Master of Business Administration	BUNGA HIMABINDU
2017 - 18	Master of Business Administration	BURUGADDA KANDALAI SINDHU
2017 - 18	Master of Business Administration	CHALAMALA SATYANARAYANA
2017 - 18	Master of Business Administration	CHANNAM ANURADHA

2017 - 18	Master of Business Administration	CHILAKA LAKSHMANA TEJA
2017 - 18	Master of Business Administration	CHINNI PHANINDRA KUMAR
2017 - 18	Master of Business Administration	CHINTHALACHERUVU VAMSI SARATH KUMAR
2017 - 18	Master of Business Administration	CHITLURI S S B G APPARAO
2017 - 18	Master of Business Administration	CHODAGIRI ASHOK KUMAR
2017 - 18	Master of Business Administration	DASARI LAKSHMANA
2017 - 18	Master of Business Administration	ELIKE NAGA SURESH BABU
2017 - 18	Master of Business Administration	GADDADI ASHOK CHAKRAVARTHI
2017 - 18	Master of Business Administration	GAJJA RAMYA
2017 - 18	Master of Business Administration	GARLAPATI NAGAJYOTHI
2017 - 18	Master of Business Administration	GOLLA RAGHAVENDRA SIVANAGARAJU
2017 - 18	Master of Business Administration	GOLLA RAKESH
2017 - 18	Master of Business Administration	GORIPARTHI VINAY KUMAR
2017 - 18	Master of Business Administration	GUDIPATI NAVEEN KUMAR
2017 - 18	Master of Business Administration	GUDURI HIMA BINDU
2017 - 18	Master of Business Administration	GOWTHU PAVAN KUMAR
2017 - 18	Master of Business Administration	GURUDASU RADHA RUKMINI
2017 - 18	Master of Business Administration	JONNAGIRI KIRAN KUMAR
2017 - 18	Master of Business Administration	BATTINA KOTESWARA RAO
2017 - 18	Master of Business Administration	JUJJUVARAPU PUNEETH KUMAR
2017 - 18	Master of Business Administration	KAGITHALA VENKATA TEJA
2017 - 18	Master of Business Administration	KANDAVALLI PRIYANKA

2017 - 18	Master of Business Administration	KANDIKONDA BALAJI
2017 - 18	Master of Business Administration	KANKIPATI VEERA LAKSHMI
2017 - 18	Master of Business Administration	KARRI ANANTHKUMAR
2017 - 18	Master of Business Administration	KONA MEHAR KRISHNA
2017 - 18	Master of Business Administration	KONALA SWAPNA
2017 - 18	Master of Business Administration	KOTA DEVI VENKATA SIRISHA
2017 - 18	Master of Business Administration	KUMPATI SUNEETHA
2017 - 18	Master of Business Administration	MADDULA NEELIMA
2017 - 18	Master of Business Administration	MALLAMPALLI MANIRATNAM
2017 - 18	Master of Business Administration	MANDAPATI MADHUSUDHANARAO
2017 - 18	Master of Business Administration	MENTA ANUSHA
2017 - 18	Master of Business Administration	MIRIYALA SANDEEP
2017 - 18	Master of Business Administration	MODUGUMUDI CHINNI VENKATESH
2017 - 18	Master of Business Administration	MOHAMMAD FATIMUZ ZOHRA
2017 - 18	Master of Business Administration	MOHAMMAD HALLIMUNISHA
2017 - 18	Master of Business Administration	MOHAMMAD SAMIMUNNEESHA
2017 - 18	Master of Business Administration	MUDDADA RAVI KUMAR
2017 - 18	Master of Business Administration	MUTYALAPALLI CHINNI KRISHNA
2017 - 18	Master of Business Administration	MYLAVARAPU GAYATHRI
2017 - 18	Master of Business Administration	NALLURI SAI RAMYA TEJASWANI
2017 - 18	Master of Business Administration	NANDIVADA VISALAKSHI
2017 - 18	Master of Business Administration	NENKA DURGA

2017 - 18	Master of Business Administration	NULU SUBHASH
2017 - 18	Master of Business Administration	NUNNA SRILAKSHMI
2017 - 18	Master of Business Administration	PADAVALA SRIKANTH
2017 - 18	Master of Business Administration	PAIDI SRIKANTH
2017 - 18	Master of Business Administration	YARLAGADDA BHANU PRAKASH
2017 - 18	Master of Business Administration	PATURI KIRAN KUMAR
2017 - 18	Master of Business Administration	PILLA MOUNIKA
2017 - 18	Master of Business Administration	PITTA LOKANADHA
2017 - 18	Master of Business Administration	CHODIMELLA NAVEEN KUMAR
2017 - 18	Master of Business Administration	POLUBOINA NARESH
2017 - 18	Master of Business Administration	POLUKONDA PRAMEELA RANI
2017 - 18	Master of Business Administration	PONAKALLA SAI VIKAS
2017 - 18	Master of Business Administration	PONUBOINA NAGARAJU
2017 - 18	Master of Business Administration	PAPPALA GEETHA LAVANYA
2017 - 18	Master of Business Administration	REBBA NARESH
2017 - 18	Master of Business Administration	SABBAVARAPU BHUVANESWARI
2017 - 18	Master of Business Administration	SANIA MUBEEN
2017 - 18	Master of Business Administration	SHAIK JAMEEL HUSSAIN
2017 - 18	Master of Business Administration	SHAIK MANJUSHA
2017 - 18	Master of Business Administration	SHAIK SABEENA
2017 - 18	Master of Business Administration	SHAIK SHAHENSHA
2017 - 18	Master of Business Administration	SONGA VEERRAJU

2017 - 18	Master of Business Administration	SYED IMRAN
2017 - 18	Master of Business Administration	THADEPALLI VENKATA SUBBA LAKSHMI
2017 - 18	Master of Business Administration	THADISETTY ALEKHYA
2017 - 18	Master of Business Administration	THANAGALA ESTHERU
2017 - 18	Master of Business Administration	TULIMELLI KRUPARAO
2017 - 18	Master of Business Administration	VANAPALLI ANAND
2017 - 18	Master of Business Administration	VEMANA DEVAPRASADU
2017 - 18	Master of Business Administration	VEMULA SRIKANTH
2017 - 18	Master of Business Administration	YANAMANDALA RAMA KRISHNA
2017 - 18	Master of Business Administration	YANAMANDALA VENKATA NAGA UMA MAHESW
2017 - 18	Master of Business Administration	ILINDALA DURGA BHAVANI
2017 - 18	Master of Business Administration	SUGGULA POORNA VIJAY
2017 - 18	Master of Business Administration	VELLAMPALLI DIVYA
2017 - 18	Master of Business Administration	KASAGANI NAGENDRA KUMAR
2017 - 18	Master of Business Administration	YELETI MOHANA KRISHNA
2017 - 18	Master of Business Administration	PARASA RAJESH KUMAR
2017 - 18	Master of Business Administration	SREE RAJ MARASAKATLA
2017 - 18	Master of Business Administration	BOMMI PRAVALLIKA
2017 - 18	Master of Business Administration	BOORLE VASANTHA SUBHASHINI
2017 - 18	Master of Business Administration	DASARI LIKHITHA
2017 - 18	Master of Business Administration	DEVISETTI SRIKANTH
2017 - 18	Master of Business Administration	KONATHAM PAVANKUMAR

2017 - 18	Master of Business Administration	KONDAPADURI VENKATESH
2017 - 18	Master of Business Administration	MOHAMMED ZARINA
2017 - 18	Master of Business Administration	MOTE SRIKANTH
2017 - 18	Master of Business Administration	SAI VENKAT DURGA NIKHIL
2017 - 18	Master of Business Administration	SAMYUKTHA MATLAPUDI
2017 - 18	Master of Business Administration	VELPULA PRATHIBHA
2016-17		
2016-17	Electrical and Electronics Enineering	PUSULURI SIREESHA
2016-17	Electrical and Electronics Enineering	RAMBHA VANAJA
2016-17	Electrical and Electronics Enineering	REDDI SEKHAR BABU
2016-17	Electrical and Electronics Enineering	SANNIDHI NIKHITHA
2016-17	Electrical and Electronics Enineering	SEERA RAJESH KUMAR
2016-17	Electrical and Electronics Enineering	SEETHALA NAGA RAJU
2016-17	Electrical and Electronics Enineering	SESHAPALLI SAIRAM
2016-17	Electrical and Electronics Enineering	SIRIGIBATTULA AYYAPPA
2016-17	Electrical and Electronics Enineering	SONGA PRASANNAKUMAR
2016-17	Electrical and Electronics Enineering	SRUNGARAM VALLI SESHENDRA KOUSHIK
2016-17	Electrical and Electronics Enineering	TAMMINENI SRIJYOTHI
2016-17	Electrical and Electronics Enineering	TATTUKOLLA RAVITEJA
2016-17	Electrical and Electronics Enineering	THENTU SAI DURGA
2016-17	Electrical and Electronics Enineering	VADDE PARDHU
2016-17	Electrical and Electronics Enineering	VAJJHA JAGADISH

2016-17	Electrical and Electronics Enineering	VEDALA VENKATA SESHASAI RANGAC
2016-17	Electrical and Electronics Enineering	VERE DAVID PAVANKUMAR
2016-17	Electrical and Electronics Enineering	YANDAM SRILEKHA
2016-17	Electrical and Electronics Enineering	ALLADA RENUKESWARA RAO
2016-17	Electrical and Electronics Enineering	ALURI NAGESH
2016-17	Electrical and Electronics Enineering	ANNABATHULA TIRUPATHI RAO
2016-17	Electrical and Electronics Enineering	BADETI RAJEEV SAI BALU
2016-17	Electrical and Electronics Enineering	BHOGADI NAGA VENKATA PAVAN KUM
2016-17	Electrical and Electronics Enineering	BODDEPALLI VIDYA SAGARA RAO
2016-17	Electrical and Electronics Enineering	BOGARAM MAHESH BABU
2016-17	Electrical and Electronics Enineering	CHANDRASEKHAR CH
2016-17	Electrical and Electronics Enineering	CHIDAGAM ASHOK KUMAR
2016-17	Electrical and Electronics Enineering	CHIDHIRALA MANI KUMAR
2016-17	Electrical and Electronics Enineering	CHILAKANTI SUDHEER BABU
2016-17	Electrical and Electronics Enineering	DESETTI SAI
2016-17	Electrical and Electronics Enineering	DUNAKA KESAV BABU
2016-17	Electrical and Electronics Enineering	GOLLA SATYAVATHI
2016-17	Electrical and Electronics Enineering	GOVATHOTI RAMVILASPASVAN
2016-17	Electrical and Electronics Enineering	GUNJE RAMUDU
2016-17	Electrical and Electronics Enineering	JINKALA SRIHARI BABU
2016-17	Electrical and Electronics Enineering	KANAKAMEDALA LEELA KRISHNA PRA
2016-17	Electrical and Electronics Enineering	KANDREGULA RAVI KIRAN

2016-17	Electrical and Electronics Enineering	KOMMA MURALIDHAR
2016-17	Electrical and Electronics Enineering	KOVVURI SAI RAVI TEJA
2016-17	Electrical and Electronics Enineering	MAKINENI VENKATA KISHORE
2016-17	Electrical and Electronics Enineering	METTA SURESH
2016-17	Electrical and Electronics Enineering	MUNGARA DIVYA NAGA DURGA
2016-17	Electrical and Electronics Enineering	NALLAMOTHU RAJESH
2016-17	Electrical and Electronics Enineering	PAMARTHI LIKHITHA
2016-17	Electrical and Electronics Enineering	RAMISETTY MAHESH
2016-17	Electrical and Electronics Enineering	RAVIMEKHALA RATNABABU
2016-17	Electrical and Electronics Enineering	SAYYED HAFEEZ
2016-17	Electrical and Electronics Enineering	SHAIK LALSAMEER
2016-17	Electrical and Electronics Enineering	SHAIK SADIK
2016-17	Electrical and Electronics Enineering	TADISETTI VENKATA NAGA RAJU
2016-17	Electrical and Electronics Enineering	THOLAM VINAYAKA SWAMY
2016-17	Electrical and Electronics Enineering	THOTA TIRUMALAKUMAR
2016-17	Electrical and Electronics Enineering	TOLAM DINESH SAIRAM
2016-17	Electrical and Electronics Enineering	VEERAGANI DINESH
2016-17	Electrical and Electronics Enineering	VELIVELA DHARMA RAO
2016-17	Electrical and Electronics Enineering	GURRAM CHRISTU KUMAR
2016-17	Electrical and Electronics Enineering	VANAMA ANJANI CHAITANYA KUMAR
2016-17	Electrical and Electronics Enineering	ABBURI SWAROOP CHOWDARY
2016-17	Electrical and Electronics Enineering	BALLA MANOJ KUMAR

2016-17	Electrical and Electronics Enineering	BALUSU MADHAVASAI KRISHNA
2016-17	Electrical and Electronics Enineering	BATHINA DURGA TEJASWI
2016-17	Electrical and Electronics Enineering	BATTULA VENKATA SATYANARAYANA
2016-17	Electrical and Electronics Enineering	BODASINGU JYOTHINDRA SAI RAJU
2016-17	Electrical and Electronics Enineering	BODIGADLA ARAVINDKUMAR
2016-17	Electrical and Electronics Enineering	BOLLU SAI GANESH
2016-17	Electrical and Electronics Enineering	BURLA VENKATESWARARAO
2016-17	Electrical and Electronics Enineering	CHANDALURI RAVALI
2016-17	Electrical and Electronics Enineering	CHEBATHINA RAJESH BABU
2016-17	Electrical and Electronics Enineering	CHINNALA GIRI DHAR
2016-17	Electrical and Electronics Enineering	CHINTA RAVITEJA PHANINDRA
2016-17	Electrical and Electronics Enineering	CHINTALURI L E CHANDRA VIDYA S
2016-17	Electrical and Electronics Enineering	CHINTHALA HEMANI
2016-17	Electrical and Electronics Enineering	DAGGUMALLI RAJASEKHARREDDY
2016-17	Electrical and Electronics Enineering	EEDA DURGA VARA PRASAD
2016-17	Electrical and Electronics Enineering	GIRIJALA PAVAN KUMAR
2016-17	Electrical and Electronics Enineering	JANAKIRAM SANAPATI
2016-17	Electrical and Electronics Enineering	JAYAMANGALA VAMSI KRISHNA
2016-17	Electrical and Electronics Enineering	KADIYAM AVILA
2016-17	Electrical and Electronics Enineering	KAJA GOPALA SUBRAMANYAM
2016-17	Electrical and Electronics Enineering	KALYAN CHAKRAVARTHY JALLI
2016-17	Electrical and Electronics Enineering	KAMA PRABHATH

2016-17	Electrical and Electronics Enineering	KAMIREDDY SIVARAMADASU
2016-17	Electrical and Electronics Enineering	KANDIKATTU SAI VIKAS TAKUR
2016-17	Electrical and Electronics Enineering	KANNIKANTI DIVYA
2016-17	Electrical and Electronics Enineering	KARICHARLA SAI HEMANTH BABU
2016-17	Electrical and Electronics Enineering	KARRI DEEPTHI
2016-17	Electrical and Electronics Enineering	KORAMUKKU KALYANI
2016-17	Electrical and Electronics Enineering	KOTTI MOUNIKA
2016-17	Electrical and Electronics Enineering	KURAPATI SUDHAKAR
2016-17	Electrical and Electronics Enineering	MADDIPATI AJAYKUMAR
2016-17	Electrical and Electronics Enineering	MANDA SAI SRUNEETH
2016-17	Electrical and Electronics Enineering	MANDALAPU TEJADEEPTHI
2016-17	Electrical and Electronics Enineering	MANDHAPATI PAVAN KALYAN
2016-17	Electrical and Electronics Enineering	MANYAM KISHORE SRINIVAS
2016-17	Electrical and Electronics Enineering	MARISETTY JUHINI LAKSHMI
2016-17	Electrical and Electronics Enineering	MURALI VENKATESH GORU
2016-17	Electrical and Electronics Enineering	MUSUNURU DURGA PRASAD
2016-17	Electrical and Electronics Enineering	NAGALLA UMA VEERA VENKATA SATY
2016-17	Electrical and Electronics Enineering	NALLA PURNA CHANDRA RAO
2016-17	Electrical and Electronics Enineering	NATTA SOUMYA
2016-17	Electrical and Electronics Enineering	NERSU LAKSHMI PRASANNA
2016-17	Electrical and Electronics Enineering	NOOLU VIJAYAKUMAR
2016-17	Electrical and Electronics Enineering	NULU SUBHASH

2016-17	Electrical and Electronics Enineering	NUNNA SAIKIRAN
2016-17	Electrical and Electronics Enineering	PANCHAKARLA PRIYANKA
2016-17	Electrical and Electronics Enineering	PAYIDETI MANIKANTA
2016-17	Electrical and Electronics Enineering	PEDAKOTA SANTOSH KUMAR
2016-17	Electrical and Electronics Enineering	PILLAGOLLA PRAVIN KUMAR
2016-17	Electrical and Electronics Enineering	POKURI GOPI VEERABHADRA KUMAR
2016-17	Electrical and Electronics Enineering	PRAGADA SOWJANYA
2016-17	Electrical and Electronics Enineering	PUJARI ANAND SAI
2016-17	Electrical and Electronics Enineering	PUSHPALA SUJANA
2016-17	MECHANICAL ENGINEERING	ABDUL IMRAN
2016-17	MECHANICAL ENGINEERING	RAJESH
2016-17	MECHANICAL ENGINEERING	ADARSH
2016-17	MECHANICAL ENGINEERING	ABBINDI SURESH
2016-17	MECHANICAL ENGINEERING	ABHIMALLA SAI TEJA
2016-17	MECHANICAL ENGINEERING	AJAY KUMAR MANCHINA
2016-17	MECHANICAL ENGINEERING	AKKIRAJU EDUKONDALU
2016-17	MECHANICAL ENGINEERING	AMBATI VENKATA TIRUMALA
2016-17	MECHANICAL ENGINEERING	ANGAJALA SAIDATTA
2016-17	MECHANICAL ENGINEERING	BALDA HRUDAYA VENKATA SURYA SATY
2016-17	MECHANICAL ENGINEERING	BANDI NAGA DURGA PAVAN KUMAR
2016-17	MECHANICAL ENGINEERING	BOMMAGANTI AVINASH
2016-17	MECHANICAL ENGINEERING	BOPPANA CHANDRASEKHAR

2016-17	MECHANICAL ENGINEERING	BOPPANA SUDHEER BABU
2016-17	MECHANICAL ENGINEERING	BUDAMA BHARGAV SIVA PRASAD
2016-17	MECHANICAL ENGINEERING	BURUGUPALLI NAGA BABU
2016-17	MECHANICAL ENGINEERING	CH SAI PHANINDRA KUMAR
2016-17	MECHANICAL ENGINEERING	CHAGANTI BHARATH
2016-17	MECHANICAL ENGINEERING	CHALAPATI PRAVEEN BABU
2016-17	MECHANICAL ENGINEERING	CHALASANI MAHIPAL
2016-17	MECHANICAL ENGINEERING	CHALLAGULLA RAGHU BABU
2016-17	MECHANICAL ENGINEERING	CHEDUGONDI SAI KUMAR
2016-17	MECHANICAL ENGINEERING	CHOKKA RAJU
2016-17	MECHANICAL ENGINEERING	DADIGE RAJESH KUMAR
2016-17	MECHANICAL ENGINEERING	DEVANABOINA MADHU BABU
2016-17	MECHANICAL ENGINEERING	DUDALA VENKATA RAMANJANEYULU
2016-17	MECHANICAL ENGINEERING	GALAM SUBRAHMANYAM
2016-17	MECHANICAL ENGINEERING	GANJI SARDAR STEPHEN RICHARDS
2016-17	MECHANICAL ENGINEERING	GANTA JAGADEESH
2016-17	MECHANICAL ENGINEERING	GANTA VENKATARAMANA
2016-17	MECHANICAL ENGINEERING	GHANTASALA SUNIL BABU
2016-17	MECHANICAL ENGINEERING	GARIKAPATI DEVI MANIKANTA VARA P
2016-17	MECHANICAL ENGINEERING	GUDALA BALA KRISHNA
2016-17	MECHANICAL ENGINEERING	GUDIPALLI KARUN GANESH
2016-17	MECHANICAL ENGINEERING	GUNDABATTINA SATISH BABU

2016-17	MECHANICAL ENGINEERING	HARISH KOSARAJU
2016-17	MECHANICAL ENGINEERING	JAJULA ANJANEYULU
2016-17	MECHANICAL ENGINEERING	JALADI ASHOK KUMAR
2016-17	MECHANICAL ENGINEERING	KAJA VISWANTH KUMAR
2016-17	MECHANICAL ENGINEERING	KALI NARESH
2016-17	MECHANICAL ENGINEERING	KALUKURTHI AGUR ANTONIO
2016-17	MECHANICAL ENGINEERING	KAPPA PHANI DURGA KIREETI
2016-17	MECHANICAL ENGINEERING	KARE AKHIL
2016-17	MECHANICAL ENGINEERING	KARNATI SRINIVASA RAO
2016-17	MECHANICAL ENGINEERING	KOLLI VAMSI KRISHNA
2016-17	MECHANICAL ENGINEERING	KONA TRINADHA SAI VINAY KUMAR
2016-17	MECHANICAL ENGINEERING	KONDAPALLI NARENDRA
2016-17	MECHANICAL ENGINEERING	KONDAVEETI MOURYANADH
2016-17	MECHANICAL ENGINEERING	KORLA SAI KUMAR
2016-17	MECHANICAL ENGINEERING	KORLIPARA SAIPRAMODHKUMAR
2016-17	MECHANICAL ENGINEERING	KOTARI V S R SUBRAHMANYA TEJA
2016-17	MECHANICAL ENGINEERING	KOTTE MOHAN CHAITANYA
2016-17	MECHANICAL ENGINEERING	KRISHNAVAMSI YANAMADALA
2016-17	MECHANICAL ENGINEERING	KUNUKU VENKATA PAVAN KUMAR
2016-17	MECHANICAL ENGINEERING	KURAKULA RAJESH
2016-17	MECHANICAL ENGINEERING	MADDALA VEERA VENKATA KOWSHIK
2016-17	MECHANICAL ENGINEERING	MADDULA RAVIRAJA

2016-17	MECHANICAL ENGINEERING	MAGANTI GANESH
2016-17	MECHANICAL ENGINEERING	MAMIDISETTI N P ASHOKCHARAVARTHI
2016-17	MECHANICAL ENGINEERING	MANEPALLI NARENDRA
2016-17	MECHANICAL ENGINEERING	MARRAPU BHARATH
2016-17	MECHANICAL ENGINEERING	MATTA NAGA BABU
2016-17	MECHANICAL ENGINEERING	MEDIBOYINA UDAY KIRAN
2016-17	MECHANICAL ENGINEERING	MERUVU PRADEEP KUMAR
2016-17	MECHANICAL ENGINEERING	METUKUMELLI BALA PADMA RAJU
2016-17	MECHANICAL ENGINEERING	MOHAMMAD SALMAN KHAN
2016-17	MECHANICAL ENGINEERING	MOHAMMED AZGAR ALI
2016-17	MECHANICAL ENGINEERING	MORAMPUDI NAGABABU
2016-17	MECHANICAL ENGINEERING	MOTAPARTY NAGA JAGADEESH
2016-17	MECHANICAL ENGINEERING	DARA UDAY BHASKARA
2016-17	MECHANICAL ENGINEERING	MUNAGALA RAM KRISHNA
2016-17	MECHANICAL ENGINEERING	MUNGARA SUBHASH BABU
2016-17	MECHANICAL ENGINEERING	NALLA UMAKANTH
2016-17	MECHANICAL ENGINEERING	NARIKAMALLI SAI SRI HARSHA
2016-17	MECHANICAL ENGINEERING	NERELLA KARTHIK
2016-17	MECHANICAL ENGINEERING	NERUSU SATISH BABU
2016-17	MECHANICAL ENGINEERING	PALLA SAI RAJEEV
2016-17	MECHANICAL ENGINEERING	PANCHADI SANDHYA TEJA
2016-17	MECHANICAL ENGINEERING	PATURI SAGAR

2016-17	MECHANICAL ENGINEERING	PAVULURI RAJA VIJAY
2016-17	MECHANICAL ENGINEERING	PEETANI KIRAN
2016-17	MECHANICAL ENGINEERING	POLEPALLI SAI SANDEEP
2016-17	MECHANICAL ENGINEERING	PRUDEVI JYOTHI KALYAN SAI
2016-17	MECHANICAL ENGINEERING	PULAGORLA AJAY KUMAR
2016-17	MECHANICAL ENGINEERING	PULIKONDA ARAVIND
2016-17	MECHANICAL ENGINEERING	PULLA SHANMUKHA VINAY KUMAR
2016-17	MECHANICAL ENGINEERING	RAAVI PHANIKRISHNA
2016-17	MECHANICAL ENGINEERING	RAGHAVARAJU ASHOK
2016-17	MECHANICAL ENGINEERING	RAMISETTY HARI RAJA GOPAL
2016-17	MECHANICAL ENGINEERING	SAYANA AJAY
2016-17	MECHANICAL ENGINEERING	SESHADRI PRUDHVI AKHIL
2016-17	MECHANICAL ENGINEERING	SESHAPALLI SAMBASIVA RAO
2016-17	MECHANICAL ENGINEERING	SHAIK KARIMULLA
2016-17	MECHANICAL ENGINEERING	SHAIK MOMIN
2016-17	MECHANICAL ENGINEERING	SHAIK KHADHAR SHAREEF
2016-17	MECHANICAL ENGINEERING	SONGA SANDEEP
2016-17	MECHANICAL ENGINEERING	SRIRAM PEDARLA
2016-17	MECHANICAL ENGINEERING	TALABOTHULA BHARADWAJ
2016-17	MECHANICAL ENGINEERING	TANEERU DURGA SAI PRAVEEN
2016-17	MECHANICAL ENGINEERING	TANGELLA SAI DHANUSH
2016-17	MECHANICAL ENGINEERING	TUMPALA HAR IKIRAN

2016-17	MECHANICAL ENGINEERING	UPPALA YADI KRANTHI
2016-17	MECHANICAL ENGINEERING	VAISHNAPU NARESH
2016-17	MECHANICAL ENGINEERING	VEERNA GANESH
2016-17	MECHANICAL ENGINEERING	VEESAM SIVA SATYA JAGADEESH
2016-17	MECHANICAL ENGINEERING	YARRA LAKSHMI UDAY BHASKAR
2016-17	MECHANICAL ENGINEERING	YARRAMSETTI SAI RAMPRASAD
2016-17	MECHANICAL ENGINEERING	AVARTULA RAJESH
2016-17	MECHANICAL ENGINEERING	BOCHCHA SAI KUMAR
2016-17	MECHANICAL ENGINEERING	BODICHERLA TANDAVA KRISHNA
2016-17	MECHANICAL ENGINEERING	CHALLA PAVAN VENKATA NAGA RAJU
2016-17	MECHANICAL ENGINEERING	CHINTA NAGASAIPRAVEENKUMAR
2016-17	MECHANICAL ENGINEERING	DUGGINABOINA GOPI
2016-17	MECHANICAL ENGINEERING	GANDIKOTA NAGA SAGAR
2016-17	MECHANICAL ENGINEERING	GUDIPUDI MAHEEDHAR
2016-17	MECHANICAL ENGINEERING	CHINTHALA HEMANTH KUMAR
2016-17	MECHANICAL ENGINEERING	KABOTHULA KUMARA VENKATA SRI D
2016-17	MECHANICAL ENGINEERING	KAVITI NAGA SATISH
2016-17	MECHANICAL ENGINEERING	KILARU SANTHAN
2016-17	MECHANICAL ENGINEERING	MOHAMMAD SHARFUDDIN
2016-17	MECHANICAL ENGINEERING	MYNENI HARI SAI KRISHNA
2016-17	MECHANICAL ENGINEERING	NELLIPUDI VENKATA NAGA SANTHOS
2016-17	MECHANICAL ENGINEERING	PAMULA VIDYA SAGAR

2016-17	MECHANICAL ENGINEERING	PERAKA BHANU PRAVEEN
2016-17	MECHANICAL ENGINEERING	SHAIK ZAKEER SHARIEF
2016-17	MECHANICAL ENGINEERING	SIRIPINA VIJAY KUMAR
2016-17	MECHANICAL ENGINEERING	TANUKONDA KUMAR MANIKANTA
2016-17	MECHANICAL ENGINEERING	VADAKOPPULA MAHARSHI
2016-17	Electronics and Communication Engineering	VAVILAPALLI DILEEP
2016-17	Electronics and Communication Engineering	GOPI PALLAVI
2016-17	Electronics and Communication Engineering	BALLE TARUN KUMAR
2016-17	Electronics and Communication Engineering	MULIKI TEJASWINI
2016-17	Electronics and Communication Engineering	MATHANGI RATNA KIREETI
2016-17	Electronics and Communication Engineering	CHAVALI JYOTHIRMAI
2016-17	Electronics and Communication Engineering	KABOTHULA VASAVI RAVALI
2016-17	Electronics and Communication Engineering	DANDUBOYINA SRIRAVAMMA
2016-17	Electronics and Communication Engineering	KAMMA RAJESH
2016-17	Electronics and Communication Engineering	KALAGARA OJASWI
2016-17	Electronics and Communication Engineering	GUBBALA NAVEEN KUMAR
2016-17	Electronics and Communication Engineering	GOLUKONDA HARISH
2016-17	Electronics and Communication Engineering	AKIRI AKASH
2016-17	Electronics and Communication Engineering	KANDIKONDA SAI SUGATRI
2016-17	Electronics and Communication Engineering	CH JAYA SRI VENKATA JAHNAVI
2016-17	Electronics and Communication Engineering	K BHUVANA CHANDRA SEKHAR
2016-17	Electronics and Communication Engineering	KANNAM MURALI

2016-17	Electronics and Communication Engineering	MEDATHATI SAVITHRI
2016-17	Electronics and Communication Engineering	MADDU JYOTHSNA
2016-17	Electronics and Communication Engineering	EDUPALLI CHARISHMA
2016-17	Electronics and Communication Engineering	MARADANI HARI NAGENDRA
2016-17	Electronics and Communication Engineering	EETI SUSHMA
2016-17	Electronics and Communication Engineering	MATHI KUSUMA
2016-17	Electronics and Communication Engineering	BAZARU HEMA NARENDRA BABU
2016-17	Electronics and Communication Engineering	MAMILLAPALLI SAI SAILAJA
2016-17	Electronics and Communication Engineering	ARIGE TONIYO PRIYANKA
2016-17	Electronics and Communication Engineering	DANDUBOYINA USHA RANI
2016-17	Electronics and Communication Engineering	BHOGOLU DURGABHAVANI
2016-17	Electronics and Communication Engineering	ERADALA PAVAN KALYAN
2016-17	Electronics and Communication Engineering	J PRASANTHI KUMARI
2016-17	Electronics and Communication Engineering	MAROTHU SANDHYA
2016-17	Electronics and Communication Engineering	BOMMANABOINA PRIYANKA
2016-17	Electronics and Communication Engineering	BAGADI SAI PRASAD
2016-17	Electronics and Communication Engineering	KANDULA KOMALI
2016-17	Electronics and Communication Engineering	CHELIKANI RAVISHANKAR
2016-17	Electronics and Communication Engineering	G JAYA RAMA HARSHA VARDHAN
2016-17	Electronics and Communication Engineering	CHILUKURI SWATHI
2016-17	Electronics and Communication Engineering	CHILAKA TEJASRI
2016-17	Electronics and Communication Engineering	HARICHANDANA DURISATI

2016-17	Electronics and Communication Engineering	MAJJI VASANTHI
2016-17	Electronics and Communication Engineering	CH MANOHAR SATYA SAI
2016-17	Electronics and Communication Engineering	GUTTA DHANYA SRI
2016-17	Electronics and Communication Engineering	DASARI KIRAN KUMAR
2016-17	Electronics and Communication Engineering	BOMMI SAI KISHAN
2016-17	Electronics and Communication Engineering	MOHAMMAD ABDUL INTYAZ
2016-17	Electronics and Communication Engineering	P B SAI HARSHINI
2016-17	Electronics and Communication Engineering	SOWJANYA PETETI
2016-17	Electronics and Communication Engineering	MUTHINENI SUKANYA
2016-17	Electronics and Communication Engineering	PATNALA KIRAN RAJA
2016-17	Electronics and Communication Engineering	NANDIVADA JYOTHSNA DEVI
2016-17	Electronics and Communication Engineering	BETHAPUDI TARUN SAI KUMAR
2016-17	Electronics and Communication Engineering	MORLA NAGENDRA
2016-17	Electronics and Communication Engineering	M L KRISHNA KALYAN SRIHAS
2016-17	Electronics and Communication Engineering	RAVINDRA REDDY VENNAPUSA
2016-17	Electronics and Communication Engineering	YALAMANCHI MOHINIKUMARI
2016-17	Electronics and Communication Engineering	BONU NAGARAJU
2016-17	Electronics and Communication Engineering	KANDIKATTU OMKAAR
2016-17	Electronics and Communication Engineering	SANDURI VASUNDHARA
2016-17	Electronics and Communication Engineering	YERAPOTHU HEMANTH KUMAR
2016-17	Electronics and Communication Engineering	NEELAM APARNA
2016-17	Electronics and Communication Engineering	PAGADALA AKHIL KUMAR

2016-17	Electronics and Communication Engineering	PARUCHURI DURGA ANUHYA
2016-17	Electronics and Communication Engineering	DONDAPATI RAVALI
2016-17	Electronics and Communication Engineering	CHENNU MANIKANTA SWAMY
2016-17	Electronics and Communication Engineering	PAMARTHI SANDEEP
2016-17	Electronics and Communication Engineering	CHANUMOLU PRIYANKA
2016-17	Electronics and Communication Engineering	RAVURI SUMALATHA
2016-17	Electronics and Communication Engineering	DEVADASU NAVEEN SAGAR
2016-17	Electronics and Communication Engineering	SHAIK NAZEER
2016-17	Electronics and Communication Engineering	P BABY NAGA MOUNIKA SREE
2016-17	Electronics and Communication Engineering	VASA GOPI SAINADH
2016-17	Electronics and Communication Engineering	VIBUDHI SOWJANYA
2016-17	Electronics and Communication Engineering	MADIRI UTTEJ
2016-17	Electronics and Communication Engineering	THOTA ARCHANA
2016-17	Electronics and Communication Engineering	VELICHETI SESHA ADITYA
2016-17	Electronics and Communication Engineering	APPIKATLA JEEVANA
2016-17	Electronics and Communication Engineering	NULETI POOJA LATHA
2016-17	Electronics and Communication Engineering	T N VENKATA KRISHNA PRIYA
2016-17	Electronics and Communication Engineering	P GEETHA LAVANYA
2016-17	Electronics and Communication Engineering	MORLA SAI KISHORE
2016-17	Electronics and Communication Engineering	POTHURI JAGAPATHI RAJU
2016-17	Electronics and Communication Engineering	SEETHALA USHA RANI
2016-17	Electronics and Communication Engineering	PADAVALA SANATH KUMAR

2016-17	Electronics and Communication Engineering	VEGIRAJU CHANDINI
2016-17	Electronics and Communication Engineering	P KRISHNA PHANINDRA SAI
2016-17	Electronics and Communication Engineering	NATTA MADHURIROSE
2016-17	Electronics and Communication Engineering	THOTA CHANDRA MOUNICA
2016-17	Electronics and Communication Engineering	GASI SYAM SATYA DHANA SAI
2016-17	Electronics and Communication Engineering	YANDRA JAYARAJU
2016-17	Electronics and Communication Engineering	PEDDIREDDY RAM CHARAN
2016-17	Electronics and Communication Engineering	DANDIBOINA SUBHA LAKSHMI
2016-17	Electronics and Communication Engineering	M V SAI BHUVANESWARI
2016-17	Electronics and Communication Engineering	P GAYATRI NAGA BHAVANI
2016-17	Electronics and Communication Engineering	P SATYA SYAMALA
2016-17	Electronics and Communication Engineering	B PHANI KUMAR
2016-17	Electronics and Communication Engineering	SHAIK KARISHMA
2016-17	Electronics and Communication Engineering	THOTA RAMA DEVI
2016-17	Electronics and Communication Engineering	NERUSU KUNDANA
2016-17	Electronics and Communication Engineering	NAGUMOTHU PRASANTI
2016-17	Electronics and Communication Engineering	UKKUSURI BHARGAV TEJA
2016-17	Electronics and Communication Engineering	YELLAMELLI MUKHESH
2016-17	Electronics and Communication Engineering	MUNNALURI NAGA USHARANI
2016-17	Electronics and Communication Engineering	N JAYA LAKSHMI NAGA SAI
2016-17	Electronics and Communication Engineering	TAVVA N V DHANA LAKSHMI
2016-17	Electronics and Communication Engineering	KAMPASATI NAGARAJU

2016-17	Electronics and Communication Engineering	YALAMARTHI RAMYA
2016-17	Electronics and Communication Engineering	VELDI ANITHA
2016-17	Electronics and Communication Engineering	CHAPPIDI HARI KRISHNA
2016-17	Electronics and Communication Engineering	PALIVELA VAMSI KRISHNA
2016-17	Electronics and Communication Engineering	THIPPANURI SRAVANI
2016-17	Electronics and Communication Engineering	PALLAGANI RAJESWARI
2016-17	Electronics and Communication Engineering	V MOHAN KOTESWARA PRASAD
2016-17	Electronics and Communication Engineering	PAVAN KUMAR YERRA
2016-17	Electronics and Communication Engineering	NEKKALAPU SAI LAKSHMAN
2016-17	Electronics and Communication Engineering	KESINENI SRAVYA
2016-17	Computer Science and Engineering	MANGARAJU DHANUNJAY
2016-17	Computer Science and Engineering	Kuchi Hariphani Chandana
2016-17	Computer Science and Engineering	Madala Sai Mounika
2016-17	Computer Science and Engineering	Kotha Pravallika
2016-17	Computer Science and Engineering	Gottapu Sri Vidya
2016-17	Computer Science and Engineering	Daruga Naga Manjula
2016-17	Computer Science and Engineering	Kadimi Neelima Devi
2016-17	Computer Science and Engineering	Lakkoju Chaitanya
2016-17	Computer Science and Engineering	Kada Tenda Bhaskara Tejaswi
2016-17	Computer Science and Engineering	Gorinkala Chandrika
2016-17	Computer Science and Engineering	Bommisetti Pavani Durga
2016-17	Computer Science and Engineering	Gogineni Sindhuja

2016-17	Computer Science and Engineering	Kalagara Varsha
2016-17	Computer Science and Engineering	Madala Sirisha
2016-17	Computer Science and Engineering	Alapati Sasikala
2016-17	Computer Science and Engineering	Eede Venkataramana
2016-17	Computer Science and Engineering	Karri Sowjanya
2016-17	Computer Science and Engineering	Kondreddi Kiran Mai
2016-17	Computer Science and Engineering	Chanapathi Triveni
2016-17	Computer Science and Engineering	Dandu Sreeja Durga
2016-17	Computer Science and Engineering	Kottu Ramya Krishna Bhavani
2016-17	Computer Science and Engineering	Kotte Sai Swapna
2016-17	Computer Science and Engineering	M Venkata Sandhya Rani
2016-17	Computer Science and Engineering	Kadimi Rajani
2016-17	Computer Science and Engineering	Golla Vijaya Lakshmi
2016-17	Computer Science and Engineering	Adapa Aparnalakshmi
2016-17	Computer Science and Engineering	Dasari Likhitha
2016-17	Computer Science and Engineering	Kothamasu Priya Sowkhya
2016-17	Computer Science and Engineering	Gogu Geetha Raja Sri
2016-17	Computer Science and Engineering	Batchu Lakshmi Soundarya
2016-17	Computer Science and Engineering	Kothapalli Naimisha
2016-17	Computer Science and Engineering	Danne Subha Rani
2016-17	Computer Science and Engineering	M Divya Satya Sai Mounika
2016-17	Computer Science and Engineering	Gorrela Leela Rani

2016-17	Computer Science and Engineering	Kandikattu Vineetha
2016-17	Computer Science and Engineering	Jayamangala Sowjanya
2016-17	Computer Science and Engineering	Dasari Swetha
2016-17	Computer Science and Engineering	M S Sailakshmi Pratyusha
2016-17	Computer Science and Engineering	Kalidindi Harika
2016-17	Computer Science and Engineering	Annamadasu Lavanya Durga
2016-17	Computer Science and Engineering	Anumothu Kundana
2016-17	Computer Science and Engineering	Kalva Venkata Ajay Kumar
2016-17	Computer Science and Engineering	Goriparthi Vinay
2016-17	Computer Science and Engineering	Kamisetty Vasu Sarathchandra
2016-17	Computer Science and Engineering	Talluri Manikanta
2016-17	Computer Science and Engineering	Bandi Pavan Kumar
2016-17	Computer Science and Engineering	Gadiparthy Jaya Deep
2016-17	Computer Science and Engineering	Chintamaneni Lakshmana Rao
2016-17	Computer Science and Engineering	Maddula Suneel Kumar
2016-17	Computer Science and Engineering	K Devesh Sai Prasanth
2016-17	Computer Science and Engineering	Ghanta Udaya Bhaskar
2016-17	Computer Science and Engineering	Manne Gowtham
2016-17	Computer Science and Engineering	Davuluri Ravi Teja
2016-17	Computer Science and Engineering	Kambampati Midhunkrishna
2016-17	Computer Science and Engineering	Akkineni Sai Chand
2016-17	Computer Science and Engineering	Injamala Manoj Kumar

2016-17	Computer Science and Engineering	Bommana Jagadeeshram Kumar
2016-17	Computer Science and Engineering	Thotakura Lavanya
2016-17	Computer Science and Engineering	Yalamanchili Anusha
2016-17	Computer Science and Engineering	Siddantam Venkata Ravali
2016-17	Computer Science and Engineering	Mulpuri Preethi
2016-17	Computer Science and Engineering	Mulagala Roja Ramani
2016-17	Computer Science and Engineering	Sree Lakshmi Yalavarthi
2016-17	Computer Science and Engineering	Shaik Sana Banu
2016-17	Computer Science and Engineering	Nurukurthi Divya
2016-17	Computer Science and Engineering	Thota Durga Bhavani
2016-17	Computer Science and Engineering	Ravipati Krishnaveni
2016-17	Computer Science and Engineering	Ponugupati Sai Harika
2016-17	Computer Science and Engineering	Mediboyina Ramya
2016-17	Computer Science and Engineering	Pidikiti Yoga Swetha
2016-17	Computer Science and Engineering	Tanguturi Anusha
2016-17	Computer Science and Engineering	Vemulamanda Jhansi Rani
2016-17	Computer Science and Engineering	Rayavarapu Sandhya Rani
2016-17	Computer Science and Engineering	Miditipati Munishambica Devi
2016-17	Computer Science and Engineering	Rekapalli Mounica
2016-17	Computer Science and Engineering	Pogiri Indu Sowjanya
2016-17	Computer Science and Engineering	Tumaty Sony Kanakadeepti
2016-17	Computer Science and Engineering	Penmetsa Hima Priya

2016-17	Computer Science and Engineering	Venigandla Ragini
2016-17	Computer Science and Engineering	Samavedam Phani Manogna
2016-17	Computer Science and Engineering	Maragani Anusha
2016-17	Computer Science and Engineering	Pusunuri Dhakshayani
2016-17	Computer Science and Engineering	Poojari Navya Durga
2016-17	Computer Science and Engineering	Mathi Sushma
2016-17	Computer Science and Engineering	Nekkalapu Sravani
2016-17	Computer Science and Engineering	Medepalli Sowjanya
2016-17	Computer Science and Engineering	R Pallavi Lakshmi Kiranmai
2016-17	Computer Science and Engineering	Nandiwada Likitha
2016-17	Computer Science and Engineering	Kanchumarthi Mounica
2016-17	Computer Science and Engineering	Sankabatula Sailikhitha
2016-17	Computer Science and Engineering	Pyla Samhitha
2016-17	Computer Science and Engineering	Thalari Asha
2016-17	Computer Science and Engineering	Mohini Vasi Reddy
2016-17	Computer Science and Engineering	Yalamuri Bhargav Satish
2016-17	Computer Science and Engineering	Surabattula Sivateja
2016-17	Computer Science and Engineering	Shaik Khasim Saheb
2016-17	Computer Science and Engineering	Varikuti Sesha Sai Pavan Anil
2016-17	Computer Science and Engineering	Grandhi Venkateswara Rao
2016-17	Computer Science and Engineering	Mukku Anantha Praveen
2016-17	Computer Science and Engineering	Ravipati Jagadish Satya Prasad

2016-17	Computer Science and Engineering	Venegalla Dileepkumar
2016-17	Computer Science and Engineering	P V V N Umamaheswara Rao
2016-17	Computer Science and Engineering	Samantula Kalyankumar
2016-17	Computer Science and Engineering	Samarla Sai Nagu
2016-17	Computer Science and Engineering	Mudduneni Mahesh Babu
2016-17	Computer Science and Engineering	T S M Subrahmanyeswara Rao
2016-17	Computer Science and Engineering	Veedhi Sri Datta Veeraju Naidu
2016-17	Computer Science and Engineering	Yesuri Indra Kishore Yadav
2016-17	Computer Science and Engineering	T Manikanta Swamy
2016-17	Computer Science and Engineering	Pendyala Sai Ram
2016-17	Computer Science and Engineering	Mohammad Mohaboob Ali
2016-17	Computer Science and Engineering	Pappu Jaswanthkumar
2016-17	Computer Science and Engineering	Nuka B V S Kiran Kumar
2016-17	Computer Science and Engineering	Tiyagura Teja Vardhana Reddy
2016 - 17	Master of Business Administration	AAREPALLI VENKATA DURGA PRASAD
2016 - 17	Master of Business Administration	AKKUPALLI VASANTHA DEVI
2016 - 17	Master of Business Administration	AKURATHI KRISHNA MURTHY
2016 - 17	Master of Business Administration	ALLURI SITHA RAMARAJU
2016 - 17	Master of Business Administration	ANNAMREDDY S S V PRASANTH
2016 - 17	Master of Business Administration	ANUMULA HARI PRIYA
2016 - 17	Master of Business Administration	BARAM AKHILANDESWARI
2016 - 17	Master of Business Administration	BAVISETTI KALPANA

2016 - 17	Master of Business Administration	BAYANA BHANU PRIYANKA
2016 - 17	Master of Business Administration	BETHA SAIKIRAN
2016 - 17	Master of Business Administration	BHIMAVARAPU CHANDRA SEKHARA RAO
2016 - 17	Master of Business Administration	BOLLU RAJESH
2016 - 17	Master of Business Administration	BORRA SURESH
2016 - 17	Master of Business Administration	BOYINA CHANDRA SEKHAR
2016 - 17	Master of Business Administration	BURRI INDU PRIYA
2016 - 17	Master of Business Administration	CHALAMALASETTI SAI RAJA
2016 - 17	Master of Business Administration	CHERUKURI LAVANYA
2016 - 17	Master of Business Administration	CHINTHADA HARSHITHA
2016 - 17	Master of Business Administration	D KOMALI NAGA HIMA BINDU
2016 - 17	Master of Business Administration	DANDU ARJUNA RAO
2016 - 17	Master of Business Administration	DASARI MOHAN KRISHNA SIVA SATYA SAI
2016 - 17	Master of Business Administration	DEVARAPALLI SUPRIYA
2016 - 17	Master of Business Administration	DIVI BHAGYA SRI
2016 - 17	Master of Business Administration	DOMMETI SYAM PRASAD
2016 - 17	Master of Business Administration	DUTTA OOHA LAKSHMI
2016 - 17	Master of Business Administration	EDA SRAVANI
2016 - 17	Master of Business Administration	EEMANI SRINIVAS KUMAR
2016 - 17	Master of Business Administration	GANDIKOTA ANJALI DEVI
2016 - 17	Master of Business Administration	GARLAPATI ALEKHYA
2016 - 17	Master of Business Administration	GOLLA NAGENDRA BABU

2016 - 17	Master of Business Administration	GONE SUJATA
2016 - 17	Master of Business Administration	KAKI TEJASWI
2016 - 17	Master of Business Administration	KALI SYAM BHUSHAN KUMAR
2016 - 17	Master of Business Administration	KAMAVARAPU HEMA BABU
2016 - 17	Master of Business Administration	KARETI SYAMA SINDHU
2016 - 17	Master of Business Administration	KARRA SHEBA
2016 - 17	Master of Business Administration	KARUMURI ANNAPURNA
2016 - 17	Master of Business Administration	KETA PRASANNA
2016 - 17	Master of Business Administration	KOLLIPARA SOMA CHANDRASHAKER
2016 - 17	Master of Business Administration	KOMMURI SAI SOWMYA
2016 - 17	Master of Business Administration	KONDAKI TRIMON
2016 - 17	Master of Business Administration	KOTTARI VENU BHAVANI
2016 - 17	Master of Business Administration	KOYYANA SURESH KUMAR
2016 - 17	Master of Business Administration	KUSUMPUDI PADMA SRI
2016 - 17	Master of Business Administration	KUTIKUPPALA VIJAYA KUMARI
2016 - 17	Master of Business Administration	LANKA HEMA MAHESWARI
2016 - 17	Master of Business Administration	LANKAPALLI RAMYA
2016 - 17	Master of Business Administration	MADDA SUVARNA RAJU
2016 - 17	Master of Business Administration	MADDALA DEVI
2016 - 17	Master of Business Administration	MADDALA DURGAYYA
2016 - 17	Master of Business Administration	MAGANTI BAVANAAPURVA
2016 - 17	Master of Business Administration	MAHADEVA SOWJANYA

2016 - 17	Master of Business Administration	MANDA ATCHUTHSANDEEP
2016 - 17	Master of Business Administration	MANDALA HEMA SRI
2016 - 17	Master of Business Administration	MAREEDU MOUNIKA
2016 - 17	Master of Business Administration	MEDAPATI NAGAJYOTHI
2016 - 17	Master of Business Administration	MENDEM CHAITANYA BABU
2016 - 17	Master of Business Administration	MOHAMMAD REHANA SULTANA
2016 - 17	Master of Business Administration	MORLA NAGA MALLESWARA RAO
2016 - 17	Master of Business Administration	MULA SISINDRI
2016 - 17	Master of Business Administration	MURALA BHAVANI
2016 - 17	Master of Business Administration	NANDURI SARANGAPANI PAVAN KUMAR
2016 - 17	Master of Business Administration	NEKKANTI MADHUSUDHAN
2016 - 17	Master of Business Administration	NUNI SIVAJI
2016 - 17	Master of Business Administration	OBILLANENI MANASA
2016 - 17	Master of Business Administration	PASUPULETI MADHAVI
2016 - 17	Master of Business Administration	PASUPULETI NAVEENA
2016 - 17	Master of Business Administration	PATAKULA RAMESH
2016 - 17	Master of Business Administration	PATHAN PARVEEN
2016 - 17	Master of Business Administration	PEETHALA SIREESHA
2016 - 17	Master of Business Administration	POTUMUDI NAGARAJU
2016 - 17	Master of Business Administration	PUNURU ASHOK KUMAR
2016 - 17	Master of Business Administration	PUPPALA KAVYA
2016 - 17	Master of Business Administration	RACHURI VIMALA

2016 - 17	Master of Business Administration	RUPA DEVI DAYANTRI
2016 - 17	Master of Business Administration	S MADHAVI
2016 - 17	Master of Business Administration	SAKEIT HIMABINDU NEELIMA
2016 - 17	Master of Business Administration	SALI PRAVEENKUMAR
2016 - 17	Master of Business Administration	SATYAVARAPU RAMAKRISHNA
2016 - 17	Master of Business Administration	SEELAM LATHA
2016 - 17	Master of Business Administration	SHAIK JAHAN
2016 - 17	Master of Business Administration	SIKHAKOLLI RAVALI
2016 - 17	Master of Business Administration	MIRIYALA SRI KANAKADURGA
2016 - 17	Master of Business Administration	TEKALE BINDU MADHAVI
2016 - 17	Master of Business Administration	TERA ABHISHEK
2016 - 17	Master of Business Administration	THOTA PAVAN KUMAR
2016 - 17	Master of Business Administration	THOTA PRASANTH RAHUL
2016 - 17	Master of Business Administration	UPPULURI SUKANYA
2016 - 17	Master of Business Administration	UYYURI HARIKA
2016 - 17	Master of Business Administration	VADELA VENKATA SRI RAMYA
2016 - 17	Master of Business Administration	VADLAPATLA HEMANI
2016 - 17	Master of Business Administration	VADLAPATLA SAI KRISHNA
2016 - 17	Master of Business Administration	VAYARASRI RAMDEVI
2016 - 17	Master of Business Administration	VEMULA VEERA MANGARAO
2016 - 17	Master of Business Administration	YAKANURI PRIYANKA
2016 - 17	Master of Business Administration	YEDIDA MANOJ KUMAR

2016 - 17	Master of Business Administration	K.RAJA SEKHAR REDDY
2016 - 17	Master of Business Administration	VALASAPALLI SARITHA